ICM870-9A/16A
Soft Starters

INSTALLATION, OPERATION & APPLICATION GUIDE

For more information on our complete range of American-made products – plus wiring diagrams, troubleshooting tips and more, visit us at **www.icmcontrols.com**



c UL us LISTED E340301

MADE IN AMERICA

FEATURES

- Starting current reduction and self-learning algorithm
- Built-in start capacitor
- Over-current protection
- Over/under voltage monitoring
- Diagnostic indicators
- Sealed enclosure

SPECIFICATIONS

Semi-Conductor Soft-Start Motor Controller, Form 2, Bypassed Controller

- SCCR: 5kA
- Ue = 240 VAC
- Ui = 240 VAC
- Uimp = 4kv
- FCC 47 CFR Part 15 Subpart B: 2021, Class B
- Pollution degree 3

Solid State motor control

Input (L1, L2) – 100-240 VAC 50/60Hz

- **Over voltage limits:** 115 VAC nominal = 140 VAC, 240 VAC nominal = 264 VAC
- **Under voltage limits:** 115 VAC nominal = 95 VAC, 240 VAC nominal =195 VAC

Outputs: Compressor

- **Solid state/relay**
- **Current:** Max. nominal = 9 FLA for ICM870-9A, 16 FLA for ICM870-16A
- **Over current limits:** ICM870-9A = 11.25A, ICM870-16A = 20A

Environmental:

- **Ambient temperature:** 40°C @ 16 FLA, 8 hour duty 50°C @ 16 FLA, Temporary duty – F = 30% (3 mins ON and 7 mins OFF); S = 6 (6 cycles per hour)
- **Storage temperature:** -40°F to 149°F (-40°C to 65°C)
- **Humidity:** 0-95% non-condensing
- **Enclosure:** IP65
- **Dimensions:** 7.94" x 4.20" x 2.10"
- **Screw hole center points:** 7.36" x 2.97"
- **ICM870-9A LRA:** 22
- **ICM870-16A LRA:** 84

IMPORTANT SAFETY INFORMATION

HIGH VOLTAGE DANGER – Always turn off power at the main service panel before installing.

CAUTION: Never mount the ICM870 against a residence or dwelling. The ICM870 must be mounted inside the metal cabinet which houses the compressor or a NEMA Type 3R Metal enclosure.

Installation of any ICM870 soft start must be done by a certified HVAC technician or licensed electrician. All installations are to be done in accordance with local, state, and national electrical codes.

WARNING: If the ICM870 is to be used with a generator, consult a licensed electrician or qualified professional to properly size the generator for your application. Using an undersized generator or invertor with the ICM870 soft start can result in a dangerous condition.

Suitable for use on a circuit capable of delivering not more than 5,000 rms symmetrical Amperes, (Convient à des circuits produisant au plus 5,000 A eff.)240 V maximum when protected by a circuit breaker having not more than 40 A, 240 volts maximum

APPLICATION

The **ICM870** is intended for Marine, Recreational Vehicle, and commercial applications. The **ICM870** integrates compressor in-rush current over startup time, thus reducing peak current demand on a power supply source (generator or other). The **ICM870** will monitor system health including voltage, current, compressor startup and self integrity. Upon a fault condition, the **ICM870** will halt operation and initiate a 4-minute anti-short cycle routine while providing diagnostic fault information by means of an LED indicator.

ICM870 COMPARABLE AMPERAGE CROSSES

The **ICM870** models cross to the comparable amperage models from the following manufacturer's:

- **Micro-Air** (Easy Start)
- **Dometic** (Smart Start)
- **Carlo Gavazzi** (Smooth Starter)
- **Network RV** (Soft Start)
- **Hyper Engineering** (Sure Start)

STANDARD AND TEST RESULTS

- UL 60947-4-2
- IEC 60947-4-2: 2020
- CAN ICES-003(B) / NMB-003(B)
- IEC 61000-4-2, Class 3 air, Class 2 contact
- IEC 61000-4-3, Class 3
- IEC 61000-4-4, Class 3
- IEC 61000-4-5, Class 3
- IEC 61000-4-6, Class 3
- IEC 61000-4-8, Class 4
- IEC 61000-4-11, Class 2
- Altitude: 2000 m
- 9A: AC-58b: 9-180: 420
- 16 A: AC-58b: 16-180: 420
- IP65

LED INDICATORS

START = Green • **RUN =** Green • **FAULT =** Red (flashing)

FLASH CODES

Flashes	Flash Conditions
1	High or low voltage
2	Compressor not sensed or open fuse
3	High current
4	Compressor start error
5	Invalid operating frequency
Rapid	Normal start delay active

FOR RESIDENTIAL A/C's

WIRING DIAGRAM (GENERAL LAYOUT)

Figure 1

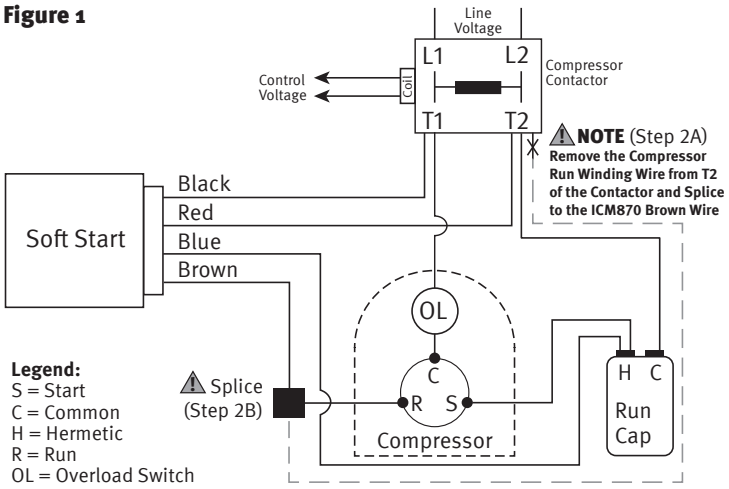

FOR RV & MARINE A/C's

WIRING DIAGRAM (GENERAL LAYOUT)

Figure 2

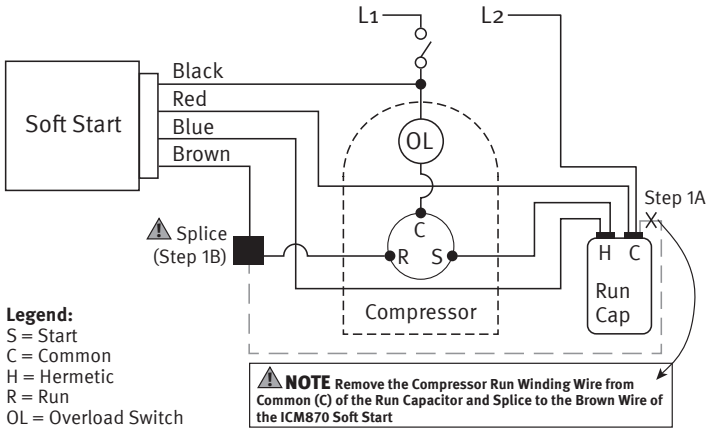

Special attention should be made with respect to the termination of the field wiring leads, only at terminals suitable for a 90°C wire at minimum.

TYPICAL INSTALLATION HVAC

NOTE: *For Trane or American Standard units, T1 and T2 are labeled differently from Figure 1. Wire according to Figure 3 for those units.*

Step #1 Connect the **ICM870 RED WIRE** > to contactor terminal T2. **See Figure 3 for Trane and American Standard (on these units the common will be T1).**

Step #2 a) Disconnect factory installed compressor run wire from the contactor terminal (T2). **See Figure 3 for Trane and American Standard (removal of the compressor run wire on these units will be from T1 on the contactor).**

b) Splice the **ICM870 BROWN WIRE** > to the compressor run wire previously disconnected in (Step 2A)

If there is a Start Capacitor and/or Start Relay already in place, disconnect them prior to installing the ICM870.

Step #3 Connect the **ICM870 BLUE WIRE** > to the run capacitor terminal (herm/hermetic/start)

Step #4 Splice the **ICM870 BLACK WIRE** › to the compressor Common and L1

WIRING DIAGRAM FOR TRANE & AMERICAN STANDARD HVAC UNITS

Figure 3

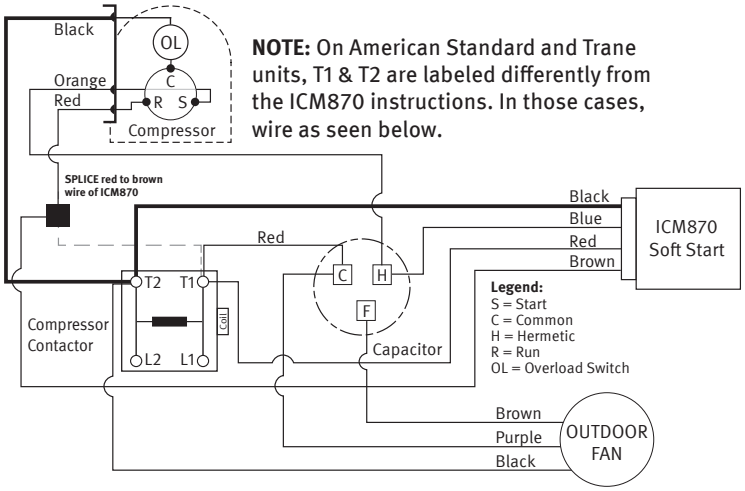

NOTE: On American Standard and Trane units, T1 & T2 are labeled differently from the ICM870 instructions. In those cases, wire as seen below.

INSTALLATION FOR RV & MARINE

Step #1 Connect **ICM870 RED WIRE** › to the run capacitor (c/ common/L2) terminal.

Step #2 a) Disconnect factory installed compressor run wire from the common run capacitor / L2 terminal

b) Splice the **ICM870 BROWN WIRE** › to the factory installed compressor run wire previously disconnected in step #1A.

If there is a Start Capacitor and/or Start Relay already in place, additional steps will be required to disconnect them.

Step #3 Connect the **ICM870 BLUE WIRE** › to the run capacitor (herm/hermetic/start) terminal

Step #4 Splice the **ICM870 BLACK WIRE** › with the factory installed compressor Overload Switch wire (OL/L1)

WHICH MODEL DO I NEED?

ICM870-9A: For AC's with a Compressor Rated Load Amps (RLA) of up to 9A

ICM870-16A: For AC's with a Compressor Rated Load Amps (RLA) of 9.1-16A

ICM870-32A: For AC's with a Compressor Rated Load Amps (RLA) of 16.1-32A

This chart reflects average conversions of Single-Phase Air Conditioning and Heat Pump Tonnage, BTU's, HP, and RLA. Please refer to your user manual or service panel to determine your actual RLA before deciding which model ICM870 you need.

Air Conditioning & Heat Pump Loads – Average

Size	BTU	RLA	ICM870 Model
Up to 3 Ton *	36,000	16	16A
4 Ton	48,000	22	32A
5 Ton	60,000	26	32A
6 Ton	72,000	32	32A

* **NOTE:** for 3-ton units, use ICM870-32A if RLA exceeds 16A

ICM CONTROLS

7313 William Barry Blvd., North Syracuse, NY 13212
www.icmcontrols.com

800.365.5525

Type of Document
LIAF288-8_ICM870-9A-16A_Instruction_8.5x11 (2 pages)

Revision History

Revision	Revised by	Which area or section of the document was changed?	Summary (List the change that was made within the document.)
E	PH	The Warning, Caution and Electrical Voltage has been updated with new verbiage	New warning, caution and electrical voltage information has been added to be more precise/descriptive. Added "Recreational HVAC" to application section. Added French verbiage and LRA. Updated typical install step one and RV and Marine switched step 1 and 2. Updated voltage symbol.

LIT P/N	ICM P/N	Size	Created by	MKT Signoff	Date
LIAF288-8	ICM870-9A-16A	8.5x11 (2 pages)	PH	PH	12/23/2024

ENG Signoff	Date	Agency Signoff	Date	DOC ID# / Revision	Date Added to DC
JF	1/14/25	MR	1/15/25	000-29-4329/Rev E	

ELEC TECH Signoff	Date	BOM
		JF