AIREX TITANOUTLET™

Seals HVAC Piping Wall Penetrations

Energy Efficient Product



U.S. Patents
9,091,377 B2
9,523,200 B2

- ✓ Sustainable Gasket Sealing System
- ✓ Seal Allows Expansion and Contraction
- ✓ Prevents Air Leakage ASTM E283 & Moisture Penetration ASTM E331
- ✓ Superior Weather & UV Resistance UL F1 Construction
- ✓ Prevents Rodent & Outdoor Air Intrusion
- ✓ Flexible Sleeve Isolate Piping for Vibration & Noise Reduction
- ✓ Permanent Support for Refrigeration Pipe
- ✓ Optional 3/4" Gasket for Lapsiding



TGS Model



Retrofit TRS Model



TSS Model

FULL CODE COMPLIANCE

Air Barrier Penetration Sealing

"Penetrations sealing shall allow for expansion and contraction of materials and mechanical vibration" C402.5.1.1, R402.4.1.1, R402.4.1.2

Air Leakage (Mandatory)

C402.4 & C402.4.2, C402.5

International Energy Conservation Code (IECC)

ASHRAE 90.1 5.4.3.

Refrigerant Pipe Penetration Sealing

"wall, floor or ceiling assembly penetrated by a refrigerant pipe shall be sealed in an approved manner"

International Mechanical Code 1109.4 2021, 2024
Uniform Mechanical Code 1107.6

Refrigerant Pipe Support

"...shall be securely fastened to a permanent support within 6 feet (1829mm) of the condenser. "

International Residential Code M1411.8 2021, 2024

Rodent Proofing

International & Uniform Mechanical Codes
International Building Code Appendix F

Refrigeration Piping Vibration & Stress

Uniform Mechanical Code -1111.0
International Mechanical Code -1109.6

TITAN OUTLET APPROVED PERFORMANCE TESTING

- ASTM E283 Standard Test Method for Air Leakage
- ASTM E331 Standard Test Method for Water Penetration
- ASTM E 2178 Air Permeance of Building Material
- ASTM D1525C Temperature Deformation Test
- ASTM D648 Temperature Load Deformation Test
- UL 94 HB Flammability Test
- UL 746C Outdoor Suitability – Rating F1

TITAN OUTLET SLEEVE

- ASTM D573 Deterioration Test
- ASTM D746 Brittleness Temperature Impact Test



New 3/4" Gasket
Perfect For Sealing Lapsiding, Masonry & Stucco

LIMITED 10 YEAR WARRANTY

Made in the USA

AIREX Manufacturing Inc.

SUBMITTAL SHEET

AIREX TITANOUTLET™

Energy Efficient Product

Project _____
Contractor _____
Date _____
Specification Reference _____
Comments _____

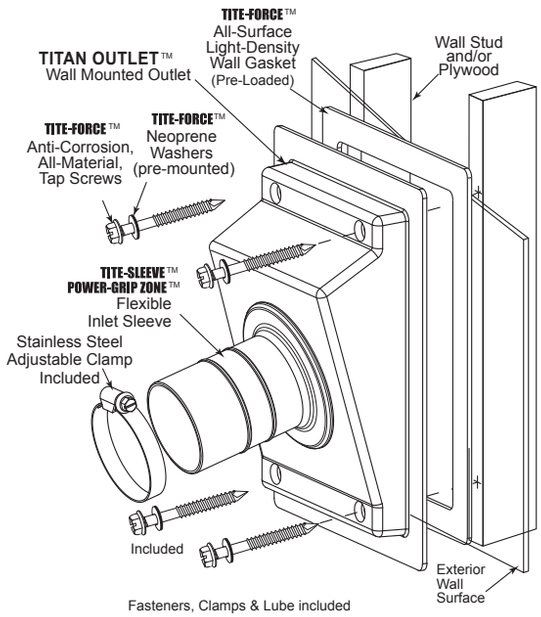

Fasteners, Clamps & Lube included

SPECIFICATIONS

AIREX TITAN OUTLET™ - A wall outlet seal by Airex Manufacturing Inc., shall be provided and installed with its compression gasket mounting method and must be fastened to wall surface with supplied ICC-ES listed and approved non-corrosive screws with pre-loaded neoprene washers as a permanent support for the refrigerant pipe per Mechanical and Residential Codes. Wall Outlet must also integrate an over-molded, flexible, elastomeric sleeve for sealing, supporting and isolating refrigerant pipes to also control vibration. The Wall Outlet shall also feature outdoor-rated durability and shall provide wall sealing expansion and contraction protection features achieved by gaskets and seals as per Energy and Mechanical code penetration seal requirements. A stainless-steel clamp must be utilized to create a "Mechanical Connection" between wall seal and pipe insulation protector as intended per mechanical codes to allow for visual inspection of piping and removable/reusable maintenance capabilities intended by Energy and Mechanical Codes. Outlet shall be designed to co-act with the AIREX E-FLEX GUARD™ Pipe Insulation Protection Cover. Wall Outlet seal and insulation protector must both be sustainably and securely installed, mechanically fastened together as one, due to piping vibration, and shall be assembled without the use of adhesives or adhesive tapes as per Energy code requirements. **Wall Outlet shall be rated UL F and be tested and meet the following testing: ASTM E 331 (Water Penetration), ASTM E 283 (Air Leakage), ASTM E 2178 - Air Permeance of Building Materials, and Protector shall meet ASTM G153 , ASTM E96, ASTM E84 / UL 723 Class A.**

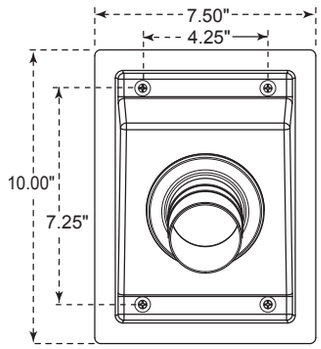

TGS MODEL

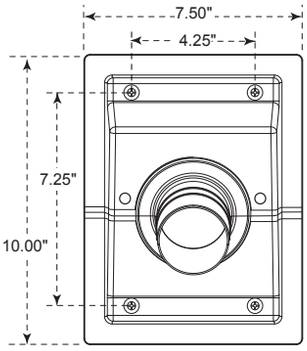

TRS MODEL

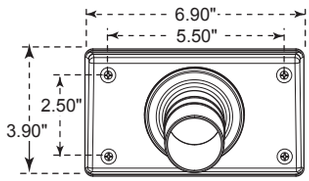

TSS MODEL

TITAN OUTLET MODEL NUMBERS

COLOR OPTIONS
GRAY - G WHITE - W

TGS MODELS

Stucco, Masonry Applications

Model #	Suction Line Insulated	Both Lines Insulated (Mini Splits - Heat Pumps)	Diameter	
TGS-550-G	(Fits: 1/2" wall thickness with 5/8", 3/4", 7/8" tube)	3/8" Wall Insulation Thickness	1.70" (4cm)	☐
TGS-575-G	(Fits: 3/4" wall thickness with 5/8", 3/4", 7/8" tube)	1/2" Wall Insulation Thickness	2.38" (6cm)	☐
TGS-510-G	(Fits: 1" wall thickness with 3/4", 7/8" tube or 3/4" wall thickness pipe insulation with 1-1/8" tube)	3/4" Wall Insulation Thickness	3.19" (8cm)	☐

TGS 3/4" GASKET

TGS-550-G-34	(Fits: 1/2" wall thickness with 5/8", 3/4", 7/8" tube)	3/8" Wall Insulation Thickness	1.70" (4cm)	☐
TGS-575-G-34	(Fits: 3/4" wall thickness with 5/8", 3/4", 7/8" tube)	1/2" Wall Insulation Thickness	2.38" (6cm)	☐
TGS-510-G-34	(Fits: 1" wall thickness with 5/8", 3/4", 7/8" tube or 3/4" wall thickness pipe insulation with 1-1/8" tube)	3/4" Wall Insulation Thickness	3.19" (8cm)	☐

TRS MODELS

Stucco, Masonry Applications

Model #	Suction Line Insulated	Both Lines Insulated (Mini Splits - Heat Pumps)	Diameter	
TRS-550-G	(Fits: 1/2" wall thickness with 5/8", 3/4", 7/8" tube)	3/8" Wall Insulation Thickness	1.70" (4cm)	☐
TRS-575-G	(Fits: 3/4" wall thickness with 5/8", 3/4", 7/8" tube)	1/2" Wall Insulation Thickness	2.38" (6cm)	☐
TRS-510-G	(Fits: 1" wall thickness with 3/4", 7/8" tube or 3/4" wall thickness pipe insulation with 1-1/8" tube)	3/4" Wall Insulation Thickness	3.19" (8cm)	☐

TRS 3/4" GASKET

TRS-550-G-34	(Fits: 1/2" wall thickness with 5/8", 3/4", 7/8" tube)	3/8" Wall Insulation Thickness	1.70" (4cm)	☐
TRS-575-G-34	(Fits: 3/4" wall thickness with 5/8", 3/4", 7/8" tube)	1/2" Wall Insulation Thickness	2.38" (6cm)	☐
TRS-510-G-34	(Fits: 1" wall thickness with 5/8", 3/4", 7/8" tube or 3/4" wall thickness pipe insulation with 1-1/8" tube)	3/4" Wall Insulation Thickness	3.19" (8cm)	☐

TSS MODELS

Siding, Stucco, Flat Wall, Compact Installation Design

Model #	Suction Line Insulated	Both Lines Insulated (Mini Splits - Heat Pumps)	Diameter	
TSS-550-G	(Fits: 1/2" wall thickness with 5/8", 3/4", 7/8" tube)	3/8" Wall Insulation Thickness	1.70" (4cm)	☐
TSS-575-G	(Fits: 3/4" wall thickness with 5/8", 3/4", 7/8" tube or 1/2" wall thickness pipe insulation with 1-1/8" tube)	1/2" Wall Insulation Thickness	2.38" (6cm)	☐

Shown above are part numbers for Gray.To order in White, Substitute G with W.

72170 Dunham Way, Suite D | Thousand Palms, CA 92276 | 760.343.2277 | www.AirexMfg.com

To download CAD & REVIT files; Please visit https://www.airexmfg.com/cad-library/

AIREX Manufacturing Inc.

© 2024 Airex Manufacturing, Inc.