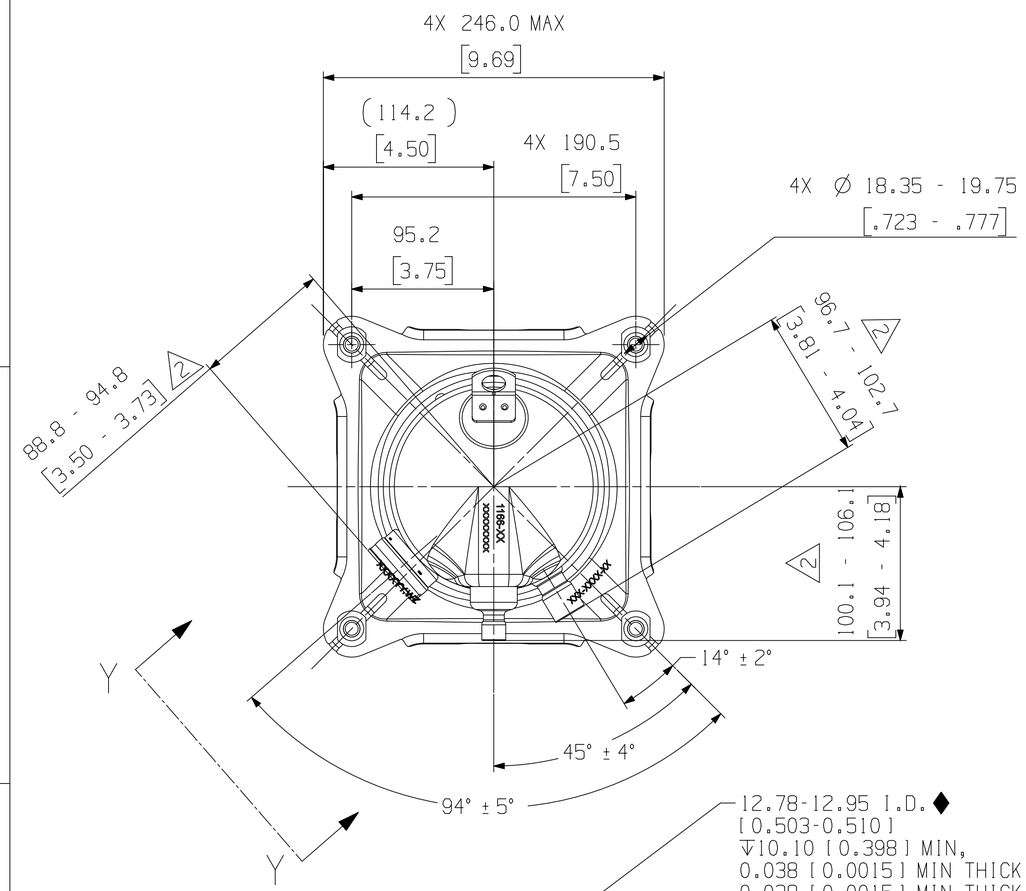

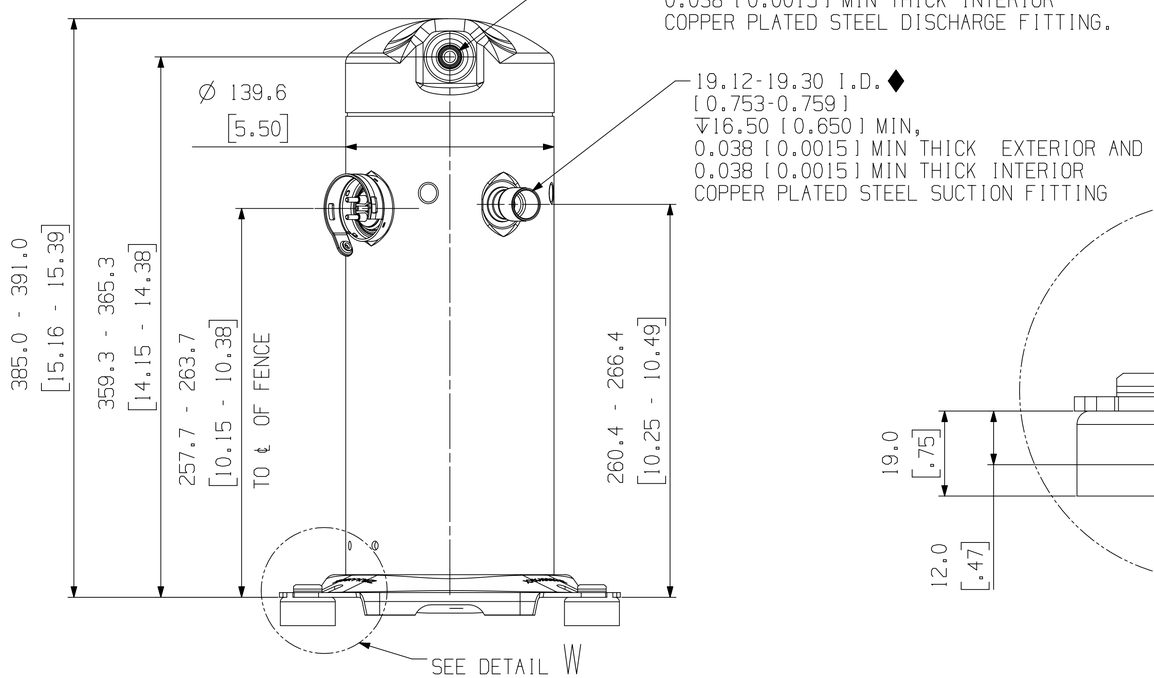

MODEL NUMBER
ZP14K5E-PFV
ZP16K5E-PFV/PFJ
ZP20K5E-PFV/PFJ/TF5/TFD/TFE
ZP21K5E-PFV/PFJ/TF5/TFD/TFE
ZP24K5E-PFV/PFJ/TF5/TFD/TFE
ZP25K5E-PFV/PFJ/TF5/TFD/TFE
ZP28K5E-PFV/PFJ/TF5/TFD/TFE
ZP29K5E-PFV/PFJ/TF5/TFD/TFE/TF7
ZP31K5E-PFV/PFJ/TF5/TFD/TFE/TF7
ZP16LXE-PFJ
ZP20LXE-TF5/TFD/TFE
ZP21LXE-PFJ
ZP25LXE-PFJ/TF5/TFD/TFE
ZP29LXE-PFJ/TF5/TFD/TFE/TF7

SPECIFICATIONS	
ES NO.	DESCRIPTION
ES92-155	CONVERSION-METRIC

NOTES:

1. ALL TOLERANCES ± 1.50 [0.060] UNLESS OTHERWISE SPECIFIED.
2. THE SUCTION TUBE, DISCHARGE TUBE, AND CIRCLE FENCE RADIAL DIMENSIONS ARE TO BE GAUGED FROM THE CENTER OF THE MOUNTING HOLE PATTERN.
3. TUBE ENDS MUST BE PLUGGED.
4. MOUNTING KIT:

GROMMET DUROMETER	4 FOOT KIT
30-35	527-0044-15

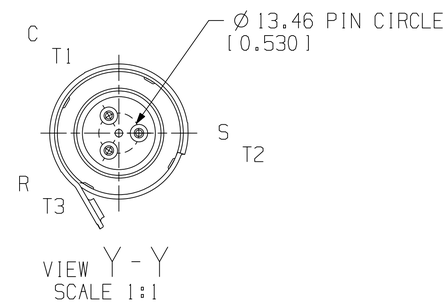

COMPRESSOR WIRING DIAGRAM
SINGLE PHASE MOTOR WITH
INTERNAL PROTECTION

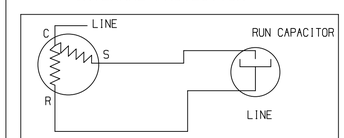

USE COPPER CONDUCTORS ONLY. USE THIS EQUIPMENT ON A GROUNDED SYSTEM ONLY. USE MINIMUM 75° C WIRE FOR AMPACITY DETERMINATION. INTERNAL MOTOR PROTECTION ALLOW THE TIME FOR RESET. OVERCURRENT PROTECTION DEVICE RATING AND TYPE MUST BE IN ACCORDANCE WITH REGULATORY AGENCY END PRODUCT APPROVALS-SEE SYSTEM NAMEPLATE

COMPRESSOR WIRING DIAGRAM
THREE PHASE MOTOR WITH
INTERNAL PROTECTION

USE COPPER CONDUCTORS ONLY. USE THIS EQUIPMENT ON A GROUNDED SYSTEM ONLY. USE MINIMUM 75° C WIRE FOR AMPACITY DETERMINATION. INTERNAL MOTOR PROTECTION-ALLOW TIME FOR RESET. PRIMARY SINGLE PHASE FAILURE PROTECTION IS PROVIDED. CRANKCASE HEATER, WHEN APPLIED, MUST BE CONNECTED ONLY TO ITS RATED VOLTAGE. OVERCURRENT PROTECTION DEVICE RATING AND TYPE MUST BE IN ACCORDANCE WITH REGULATORY AGENCY END PRODUCT APPROVALS - SEE SYSTEM NAMEPLATE. TO CORRECT IMPROPER MOTOR ROTATION. SWITCH ANY TWO SUPPLY LINES.

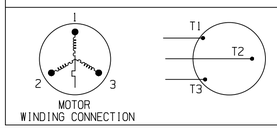

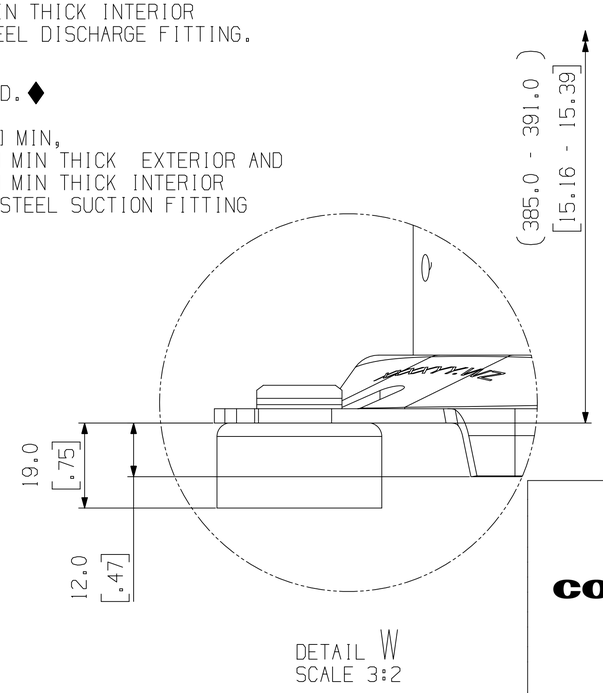

ENG NOTICE NO.	REV.NO.	REVISIONS	DATE	BY	CHKD
ECN330224	32	ADD LXE MODELS	01-22-25	RAD	MA
ECN329379	31	ADD LXE MODELS	12-02-24	RAD	MA
32-1103-064	0	RELEASED	05-12-04	LMW	GD

COPELAND

INTERPRET PER ASME Y14.5M-1994 AND COPELAND DESIGN STANDARDS DS2002

DO NOT SCALE DRAWING

(53FR)

◆ CRITICAL PRODUCT CHARACTERISTICS

UNLESS OTHERWISE SPECIFIED DIMENSIONS ARE MILLIMETER OR [INCH] TOLERANCES: 1-PLACE ± 2-PLACE ± ANGULAR ± . 1

24

CONFIDENTIALITY NOTICE
THIS DRAWING AND INFORMATION CONTAINED HEREIN ARE THE EXCLUSIVE PROPERTY OF COPELAND LP AND/OR ITS AFFILIATES (COLLECTIVELY "COPELAND") AND SHALL BE RETURNED UPON DEMAND AND SHALL NOT BE REPRODUCED IN WHOLE OR IN PART, DISCLOSED TO ANYONE ELSE OR USED, WITHOUT THE WRITTEN CONSENT OF COPELAND.

MATERIAL SPECIFICATION	DRAWN BY	SUPERSEDES DWG NO /	REV NO
N/A	RRP	497-2836-00 /	026
	DATE 01-24-14	SCALE 1:2	DATE FORMAT: MM-DD-YY

TITLE: REF DWG-WELD COMP ASSM

DRAWING NUMBER: 497-2836-00 SHEET 1 OF 1 DWG SIZE 4

©COPYRIGHT COPELAND - CONFIDENTIAL

UNCONTROLLED - DO NOT MODIFY