MODEL NUMBER	15 16
YA29K1E-PFV/TF5/TFE/TFD/PFJ/TF7	
YA31K1E-PFV/TF5/TFE/TFD/PFJ	
YP29K1T-PFV/TF5/TFE/TFD	
YP31K1T-PFV/TF5/TFE/TFD/PFJ	
ZP29K7E-PFV/TFD/TF5/TFE	
ZP31K7E-PFV/TFD/TF5/TFE	
ZP31LXE-PFV/TFE	

SPECIFICATIONS	
ES NO.	DESCRIPTION
ES92-155	CONVERSION-METRIC

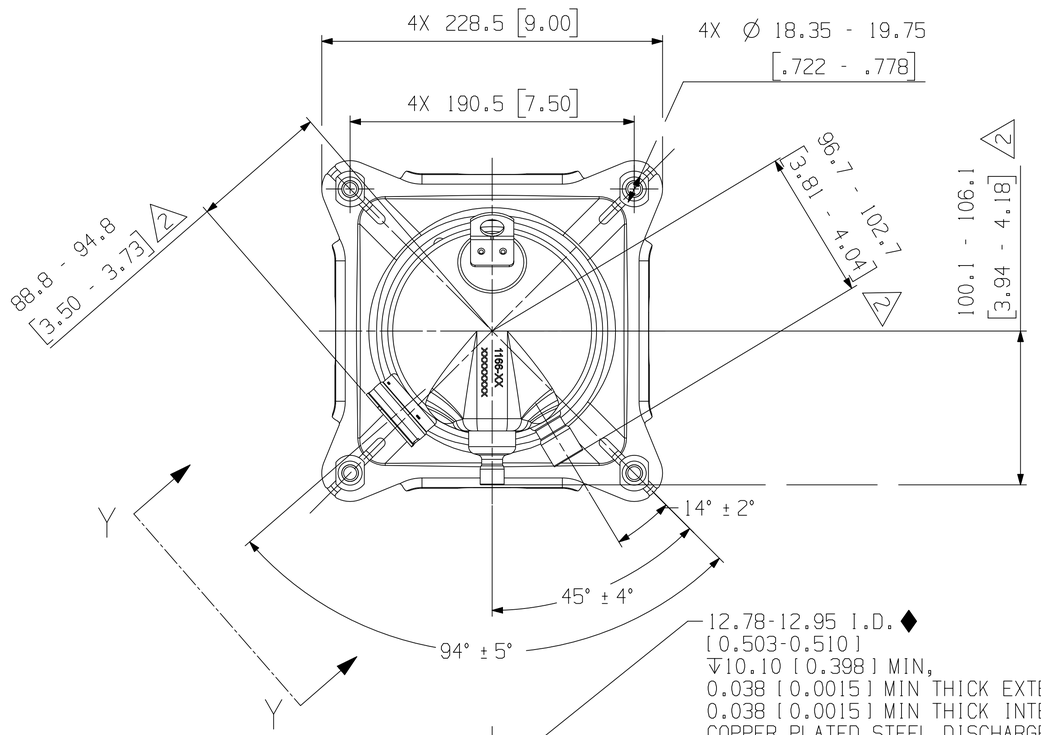

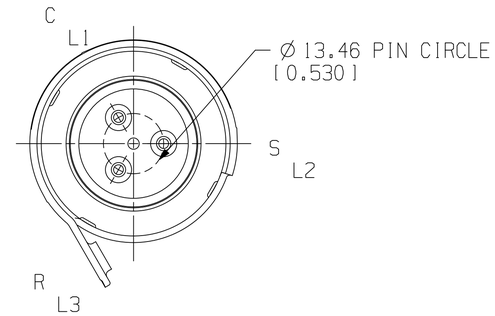

VIEW Y - Y
SCALE 3:2

NOTES:

1. ALL TOLERANCES ± 1.5 [0.06] UNLESS OTHERWISE SPECIFIED.
2. THE SUCTION TUBE, DISCHARGE TUBE, AND CIRCLE FENCE RADIAL DIMENSIONS ARE TO BE GAUGED FROM THE CENTER OF THE MOUNTING HOLE PATTERN.
3. TUBE ENDS MUST BE PLUGGED.
4. MOUNTING KIT:

GROMMET DUROMETER	4 FOOT KIT
30-35	527-0044-15

COMPRESSOR WIRING DIAGRAM
SINGLE PHASE MOTOR WITH
INTERNAL PROTECTION

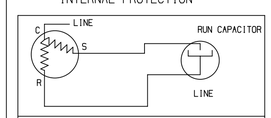

USE COPPER CONDUCTORS ONLY. USE THIS EQUIPMENT ON A GROUNDED SYSTEM ONLY. USE MINIMUM 75° C WIRE FOR AMPACITY DETERMINATION. INTERNAL MOTOR PROTECTION ALLOW THE TIME FOR RESET. OVERCURRENT PROTECTION DEVICE RATING AND TYPE MUST BE IN ACCORDANCE WITH REGULATORY AGENCY END PRODUCT APPROVALS-SEE SYSTEM NAMEPLATE

COMPRESSOR WIRING DIAGRAM
THREE PHASE MOTOR WITH
INTERNAL PROTECTION

USE COPPER CONDUCTORS ONLY. USE THIS ON A GROUNDED SYSTEM ONLY. USE MINIMUM 75° C WIRE FOR AMPACITY DETERMINATION. INTERNAL MOTOR PROTECTION-ALLOW TIME FOR RESET. PRIMARY SINGLE PHASE FAILURE PROTECTION IS PROVIDED. CRANKCASE HEATER, WHEN APPLIED, MUST BE CONNECTED ONLY TO ITS RATED VOLTAGE. OVERCURRENT PROTECTION DEVICE RATING AND TYPE MUST BE IN ACCORDANCE WITH REGULATORY AGENCY END PRODUCT APPROVALS - SEE SYSTEM NAMEPLATE. TO CORRECT IMPROPER MOTOR ROTATION, SWITCH ANY TWO SUPPLY LINES.

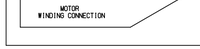

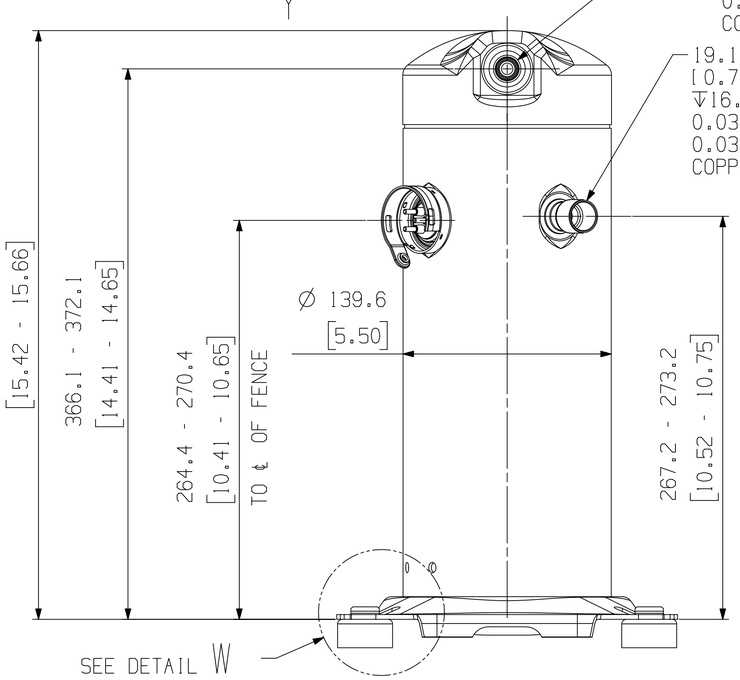

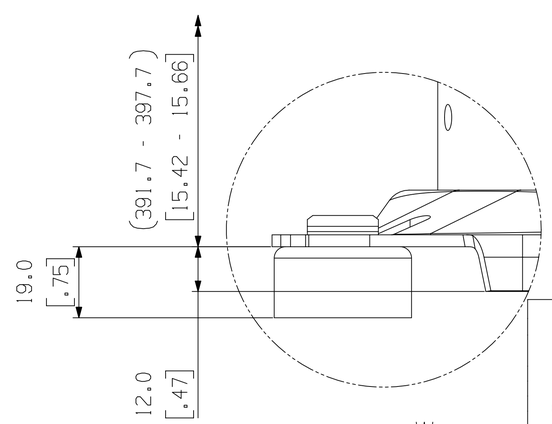

DETAIL W
SCALE 5:4

ECN330224	16	ADD LXE MODEL	01-15-25	RAD	MA
ECN329379	15	ADD LXE MODEL	11-26-24	RAD	MA
ECN307502	0	RELEASED	07-10-20	LMW	JAS
ENG NOTICE NO.	REV.NO.	REVISIONS	DATE	BY	CHKD

COPELAND

INTERPRET PER ASME Y14.5M-1994 AND COPELAND DESIGN STANDARDS DS2002

DO NOT SCALE DRAWING

♦ CRITICAL PRODUCT CHARACTERISTICS

UNLESS OTHERWISE SPECIFIED DIMENSIONS ARE MILLIMETER OR [INCH] TOLERANCES: 1-PLACE ± 2-PLACE ± ANGULAR ± 1

CONFIDENTIALITY NOTICE
24 THIS DRAWING AND INFORMATION CONTAINED HEREIN ARE THE EXCLUSIVE PROPERTY OF COPELAND LP AND/OR ITS AFFILIATES (COLLECTIVELY "COPELAND") AND SHALL BE RETURNED UPON DEMAND AND SHALL NOT BE REPRODUCED IN WHOLE OR IN PART, DISCLOSED TO ANYONE ELSE OR USED, WITHOUT THE WRITTEN CONSENT OF COPELAND.

MATERIAL SPECIFICATION	DRAWN BY	SUPERSEDES DWG NO / REV NO
N/A	LMW	497-1493-00 / 019
	DATE 07-10-20	SCALE 1:2 / DATE FORMAT: MM-DD-YY

TITLE
REF DWG-WELD COMP ASSM

DRAWING NUMBER 497-3418-00 SHEET 1 OF 1 DWG 4 SIZE

©COPYRIGHT COPELAND - CONFIDENTIAL

UNCONTROLLED - DO NOT MODIFY