MODEL NUMBER
YA24K1E-TFD/TF5/TFE/PFV/PFJ
YA25K1E-TFD/TF5/TFE/PFJ/PFV
YP24K1T-PFV/PFJ/TFD/TF5/TFE
YP25K1T-PFV
ZP22K6E-PFV
ZP23K6E-PFV
ZP24K6E-PFV/TF5/TFD
ZP25K6E-PFV/TF5/TFD
ZP26K6E-PFV
ZP27K6E-PFV

MODEL NUMBER 31
ZP28K6E-PFV
ZP29K6E-PFV/TFD/TF5/TFE
ZP31K6E-PFV/TF5/TFD/TFE
ZP32K6E-PFV
ZP24K7E-PFV
ZP25K7E-PFV
ZP25LXE-PFV
ZP29LXE-PFV

SPECIFICATIONS	
ES NO.	DESCRIPTION
ES92-155	CONVERSION-METRIC

NOTES:

1. ALL TOLERANCES ± 1.50 [0.060] UNLESS OTHERWISE SPECIFIED.
2. THE SUCTION TUBE, DISCHARGE TUBE, AND CIRCLE FENCE RADIAL DIMENSIONS ARE TO BE GAUGED FROM THE CENTER OF THE MOUNTING HOLE PATTERN.
3. TUBE ENDS MUST BE PLUGGED.
4. MOUNTING KIT:

GROMMET DUROMETER	4 FOOT KIT
30-35	527-0044-15

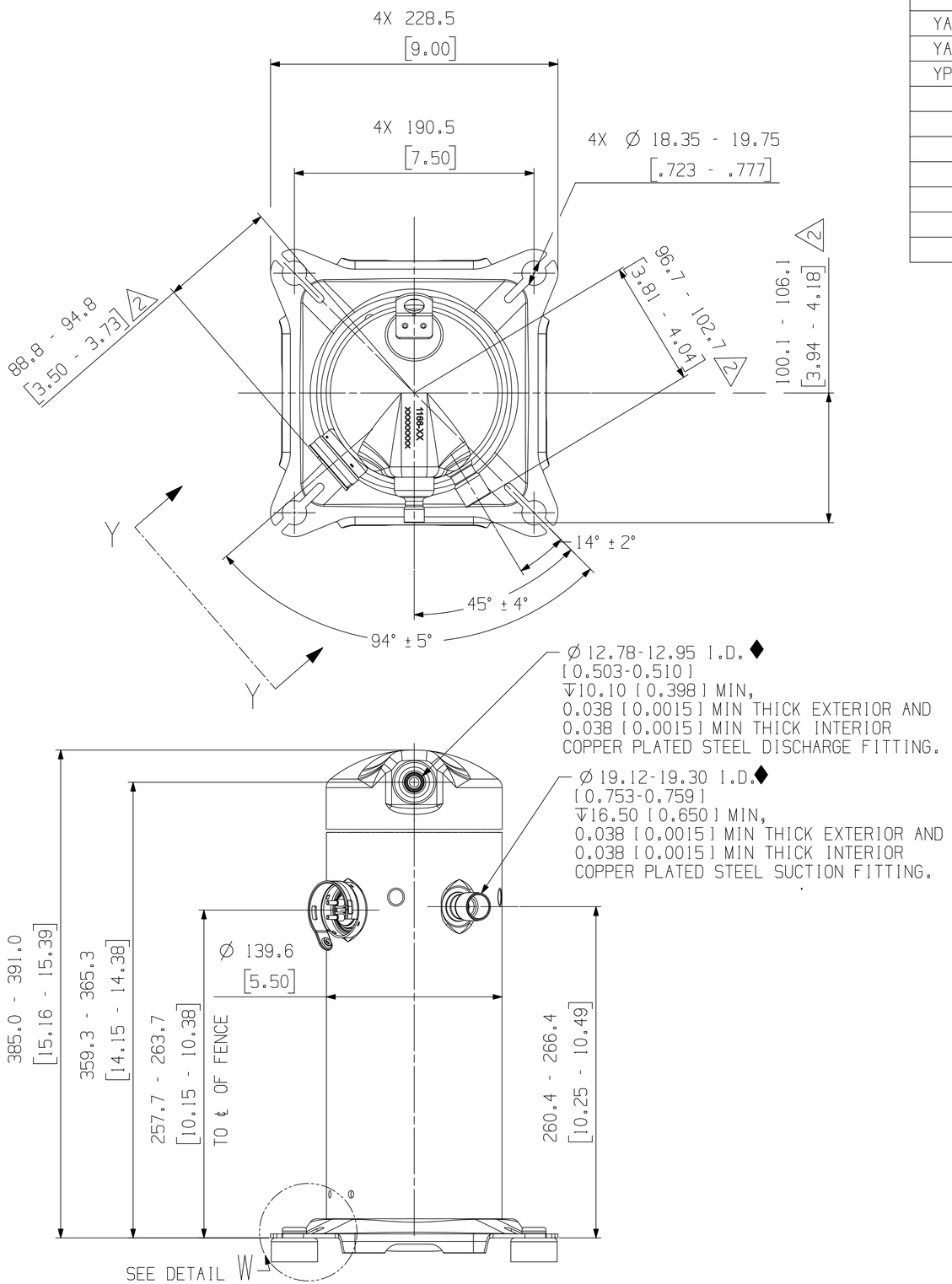

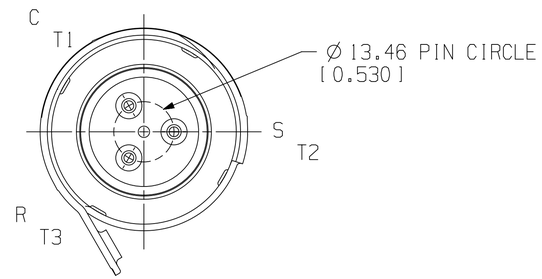

VIEW Y - Y
SCALE 3:2

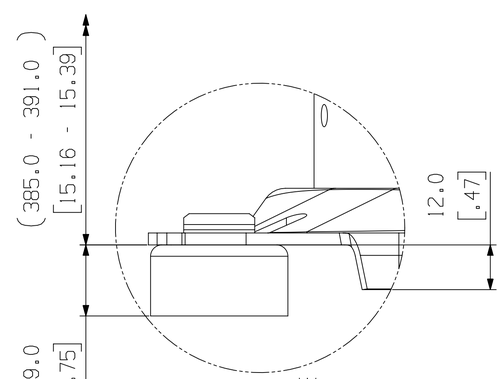

DETAIL W
SCALE 5:4

COMPRESSOR WIRING DIAGRAM
SINGLE PHASE MOTOR WITH
INTERNAL PROTECTION

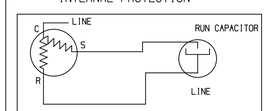

USE COPPER CONDUCTORS ONLY. USE THIS EQUIPMENT ON A GROUNDED SYSTEM ONLY. USE MINIMUM 75° C WIRE FOR AMPACITY DETERMINATION. INTERNAL MOTOR PROTECTION ALLOW THE TIME FOR RESET. OVERCURRENT PROTECTION DEVICE RATING AND TYPE MUST BE IN ACCORDANCE WITH REGULATORY AGENCY END PRODUCT APPROVALS-SEE SYSTEM NAMEPLATE

COMPRESSOR WIRING DIAGRAM
THREE PHASE MOTOR WITH
INTERNAL PROTECTION

USE COPPER CONDUCTORS ONLY. USE THIS EQUIPMENT ON A GROUNDED SYSTEM ONLY. USE MINIMUM 75° C WIRE FOR AMPACITY DETERMINATION. INTERNAL MOTOR PROTECTION-ALLOW TIME FOR RESET. PRIMARY SINGLE PHASE FAILURE PROTECTION IS PROVIDED. CRANKCASE HEATER, WHEN APPLIED, MUST BE CONNECTED ONLY TO ITS RATED VOLTAGE. OVERCURRENT PROTECTION DEVICE RATING AND TYPE MUST BE IN ACCORDANCE WITH REGULATORY AGENCY END PRODUCT APPROVALS - SEE SYSTEM NAMEPLATE. TO CORRECT IMPROPER MOTOR ROTATION. SWITCH ANY TWO SUPPLY LINES.

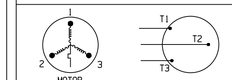

MOTOR
WINDING CONNECTION

ENG NOTICE NO.	REV.NO.	REVISIONS	DATE	BY	CHKD
ECN329379	31	ADD LXE MODELS	11-26-24	RAD	MA
ECN006049	0	RELEASED	06-14-13	PBM	BR

COPELAND

INTERPRET PER ASME Y14.5M-1994 AND COPELAND DESIGN STANDARDS DS2002

DO NOT SCALE DRAWING

CRITICAL PRODUCT CHARACTERISTICS

UNLESS OTHERWISE SPECIFIED DIMENSIONS ARE MILLIMETER OR [INCH]
TOLERANCES:
1-PLACE ±
2-PLACE ±
ANGULAR ± 1

24

CONFIDENTIALITY NOTICE

THIS DRAWING AND INFORMATION CONTAINED HEREIN ARE THE EXCLUSIVE PROPERTY OF COPELAND LP AND/OR ITS AFFILIATES (COLLECTIVELY "COPELAND") AND SHALL BE RETURNED UPON DEMAND AND SHALL NOT BE REPRODUCED IN WHOLE OR IN PART, DISCLOSED TO ANYONE ELSE OR USED, WITHOUT THE WRITTEN CONSENT OF COPELAND.

MATERIAL SPECIFICATION	DRAWN BY	SUPERSEDES DWG NO / REV NO
N/A	MA	497-1493-00 / 026
	DATE 04-25-24	SCALE 1:2
		DATE FORMAT: MM-DD-YY

TITLE
REF DWG-WELD COMP ASSM

DRAWING NUMBER 497-1493-00 | SHEET 1 OF 1 | DWG SIZE 4

©COPYRIGHT COPELAND - CONFIDENTIAL

UNCONTROLLED - DO NOT MODIFY