ZONECC4ZCN01

Performance™ 4-Zone System

Carrier®

Turn to the experts

Installation and Start-up Guide

NOTE: Read the entire instruction manual before starting the installation.

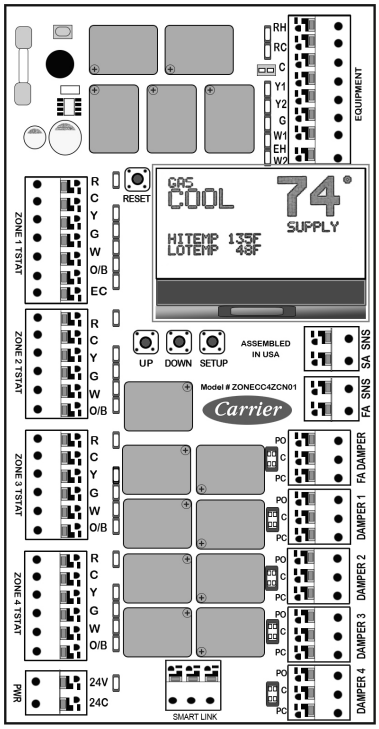

A210199Ca

Safety Considerations

Improper installation, adjustment, alteration, service, maintenance, or use can cause explosion, fire, electrical shock, or other conditions which may cause death, personal injury or property damage. Consult a qualified installer, service agency or your distributor or branch for information or assistance. The qualified installer or agency must use factory-authorized kits or accessories when modifying this product. Refer to the individual instructions packaged with the kits or accessories when installing.

Follow all safety codes. Wear safety glasses, protective clothing, and work gloves. Have a fire extinguisher available. Read these instructions thoroughly and follow all warnings and cautions included in literature and attached to the unit. Consult local building codes and the current edition of the National Electrical Code (NEC) NFPA 70. In Canada, refer to the current editions of the Canadian Electrical Code CSA C22.1.

Recognize safety information. When you see this symbol ⚠ on the unit and in instructions or manuals, be alert to the potential for personal injury. Understand the signal words DANGER, WARNING, and CAUTION. These words are used with the safety--alert symbol. DANGER identifies the most serious hazards, which will result in severe personal injury or death. WARNING signifies hazards, which could result in personal injury or death. CAUTION is used to identify unsafe practices, which may result in minor personal injury or product and property damage. NOTE is used to highlight suggestions which will result in enhanced installation, reliability, or operation.

Table of Contents

Safety Considerations 1
Table of Contents 1
Introduction. 2
Configuration Options 2
  Mounting 2
Power 2
Transformer Sizing 2
  Example 2
Wiring 3
  Thermostat 3
  Controller 3
  Supply Air Temperature Sensor (SAS) (Fig. 5). 5
  Return Air Sensor (RAS) 5
  Optional Fresh Air/Outdoor Air Sensor (FAS) 5
  A/C - Gas Furnace and A/C - Electric Furnace 5
  Electric Heat Pump 6
  Bypass Elimination on Single-Speed Systems 6
Configuration and Setup 6
  A/C Gas Heat and A/C Electric Heat. 6
  Electric Heat Pump - Electric Auxiliary Heat 8
  Dual Fuel Heat Pump (Hybrid Heat) 9
Sequence of Operation 10
  Single Stage Cooling (A/C and Heat Pump) 10
  Low Temp Cutout 10
  Two Stage Cooling (A/C and Heat Pump) 10
  Single Stage Heating (Gas & Electric Heat; NOT Heat Pump). . 11
  Single Stage Heating - Heat Pump. 11
  Two Stage Heating - Heat Pump 11
  Dual Fuel Heat Pump (Fig. 12) 12
  Single Stage Heating (Dual Fuel Heat Pump) 12
  Two-Stage Heating (Dual Fuel Heat Pump) 12
  Controller Features. 12

Introduction

The Carrier 4-Zone system allows the air conditioning and heating equipment to control temperatures in 4 distinct spaces or zones within a building. Each zone has independent temperature settings controlled by a conventional thermostat.

Each zone system is comprised of a 4-zone controller and a duct temperature sensor. The comfort temperature settings can change automatically through the use of schedules if programmable thermostats are selected. This allows the Carrier 4-Zone to change the temperature settings in zones to reflect occupancy or usage. The Carrier 4-Zone system uses motorized air volume control dampers (also called zone dampers) to regulate the flow of conditioned air into the zones.

Configuration Options

- Option #01 Set board function - Main or Expansion
- Option #02 Set expansion address
- Option #03 Set system type
- Option #04 Set temperature display (Fahrenheit or Celcius)
- Option #05 Set equipment stage (two-stage system ONLY)
- Option #06 Set thermostat type (heat pump system ONLY)
- Option #07 Set reversing valve actuation
- Option #08 NOT USED/FOR FUTURE USE
- Option #09 Set gas high temp cutout (gas and electric furnace ONLY)
- Option #10 Set low temp cutout
- Option #11 Set heat pump high temp cutout (heat pump system ONLY)
- Option #12 Set aux. heat cut-in temp (single-stage heat pump ONLY)
- Option #13 Set aux. heat cut-in time (single-stage heat pump ONLY)
- Option #14 Set Fresh Air mode - on or off
- Option #15 Set Fresh Air temperature set point (ONLY if Fresh Air turned ON)
- Option #16 Set fresh air minutes per hour (ONLY if Fresh Air turned OFF)
- Option #17 Set fresh air sensor mode - on or off (ONLY if fresh air minutes are greater than ZERO)
- Option #18 Set fresh air low-temp lockout (ONLY if fresh air sensor mode is ON)
- Option #19 Set fresh air high-temp lockout (ONLY if fresh air sensor mode is ON)
- Option #20 Set dual fuel heat pump outdoor low-temp lockout (dual fuel system ONLY)
- Option #21 Set second stage lockout - on or off (two-stage equipment ONLY)
- Option #22 Set zone 1 priority
- Option #23 Set auto changeover time - 10 or 15 minutes
- Option #24 Disable aux. heat staging above 40 degrees outside air (heat pump systems ONLY)
- Option #25 Allow zone 1 thermostat staging (two-stage systems ONLY)
- Option #26 Set 2nd stage cut-in time based on time only (OFF or ON)
- Option #27 Set 2nd stage cut-in based on time and temperature
- Option #28 Set 2nd stage cut-in time (time only)
- Option #29 Set Dissipation Mode (A2L Only)

Table 1 – Ratings

Input Ratings	Voltage: 18-40 VAC 50/60 HZ transformer of 40 VA or more
Current Draw	• Zone Controller: 10 VA • PO/PC Dampers: 3 VA • All VA specifications at 24 VAC
Fuse	5 x 20mm 30 ma Slo-Blo
Temperature Ratings	Shipping: -20° to 150° F Operating: -20° to 165° F
Humidity Ratings	5% to 95% RH non-condensing
Wiring	18-gauge SOLID wire

Mounting

Mount the controller near the HVAC equipment. It can be mounted on a wall, stud, roof tress or the supply ductwork. It can be mounted in any orientation, including flat on top of the supply plenum. When mounting in a vertical position it should be leveled for a good appearance.

1. Remove the clear lid from the enclosure.
2. Place the controller in the desired position and use the base as a template to mark the hole locations.
3. Attach the controller to the surface with the appropriate screws (not included). If attaching the controller to drywall or ductboard, use hollow wall anchors to secure in place.

Power

The system REQUIRES A SEPARATE 24 VAC TRANSFORMER (not included) for powering the controller, zone thermostats and dampers. It is recommended to install a fuse on the 24 VAC output from the transformer.

⚠ CAUTION

EQUIPMENT DAMAGE HAZARD

Failure to follow this caution could result in damage to the unit.

Do not attempt to power the controller from the transformer in the indoor unit. Damage could occur.

Transformer Sizing

The 24 volt transformer must be sized and fused based on the controller, the total dampers and the thermostats.

Table 2 – Power Examples

Device	Power Used
Performance™ Controller	10 VA
Power Open/Close Damper	3 VA
Typical Thermostat	2 VA

Example

Transformer Calculation:

1 – 4-zone controller
+ 4 – POC dampers (3 VA x 4)
+ 4 – Thermostats (2 VA x 4)
= 30 VA total

Table 3 – Fuse Sizing Rule of Thumb

Transformer VA	Fuse Size
40	2 amp
75	3 amp
100	4 amp

⚠ WARNING

Voltage Hazard

Failure to follow this warning could result in personal injury or equipment damage.

Disconnect power before beginning installation. Wire the entire zone panel before applying transformer power.

Wiring

Connect the transformer to the 24V and 24C inputs on the zone control board (Fig. 1).

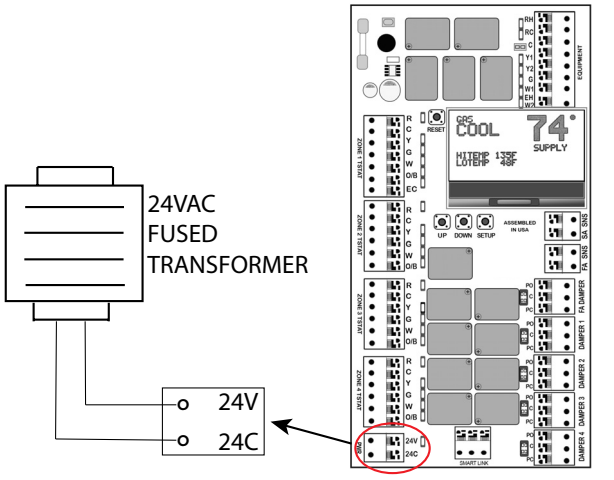

A210200

Fig. 1 – Transformer to Control Board Connection

Thermostat

Install thermostats using instructions provided with thermostats.

IMPORTANT: Battery-powered thermostats should not be used with this zoning control. Only 24VAC thermostats powered via R and C should be used.

The controller is compatible with most thermostats that have a common connection. The controller will use time and supply air temperature to automatically manage staging. This eliminates the need for multi-stage thermostats.

On HEAT PUMP equipment ONLY, either a Gas/Electric or Heat Pump thermostats can be used. It is recommended to use a Heat Pump thermostat with an Emergency Heat switch on Zone 1 for all heat pump installations. An emergency heat call can ONLY be initiated from the ZONE 1 THERMOSTAT.

1. Connect either single stage gas/electric or heat pump thermostats to each terminal blocks labeled Zone 1 TSTAT, Zone 2 TSTAT, Zone 3 TSTAT and Zone 4 TSTAT (Fig. 2).
2. The Zone 1 TSTAT will operate Damper 1. The Zone 2 TSTAT will operate Damper 2, etc.
3. Using 18 Gauge Solid Thermostat Wire, strip 1/2 inch of insulation from each wire. Hold down the orange button and push the thermostat wire into the SCREWLESS terminals on the control board.
4. Connect the other end of the thermostat wire to the corresponding terminals on the thermostat.
5. To use the EC terminal on the Zone 1 TSTAT, a separate switch must be used to supply 24 VAC to this terminal. You may also use a 2-stage thermostat on Zone 1 ONLY if you want to control Zone 1 staging by connecting Y2 from the thermostat to the EC terminal on the Zone 1 terminal block. (See Option #25)

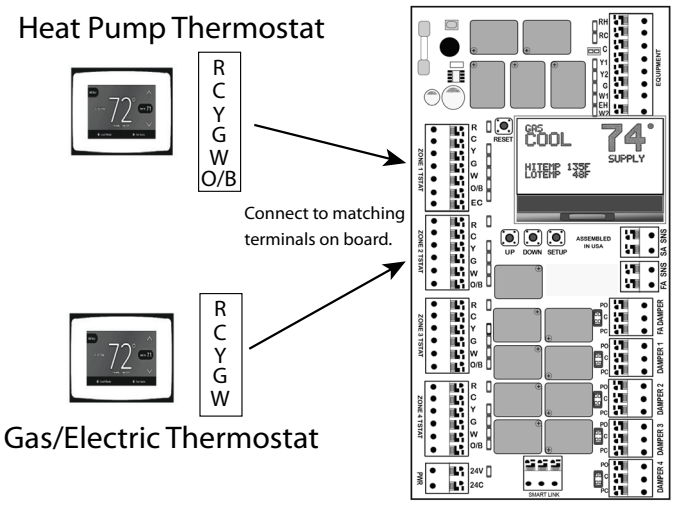

A210201

Fig. 2 – Thermostat Wiring

Controller

The controller will operate 3-Wire Power Open/Power Close dampers (Fig. 4).

Power Open/Power Close 3-Wire Dampers

1. Use 18/3 solid core wire
2. Strip 1/2 inch of insulation from each wire.
3. Hold down the orange button on the Damper 1 terminal block and push the three wires for the zone damper into the SCREWLESS terminals. Use WHITE for Common (C), GREEN for Power Open (PO) and RED for Power Close (PC).
4. Connect the other end of the wires to the terminals on the zone damper, using the same color code.
5. Repeat steps 3 and 4 for the Zone 2 damper.

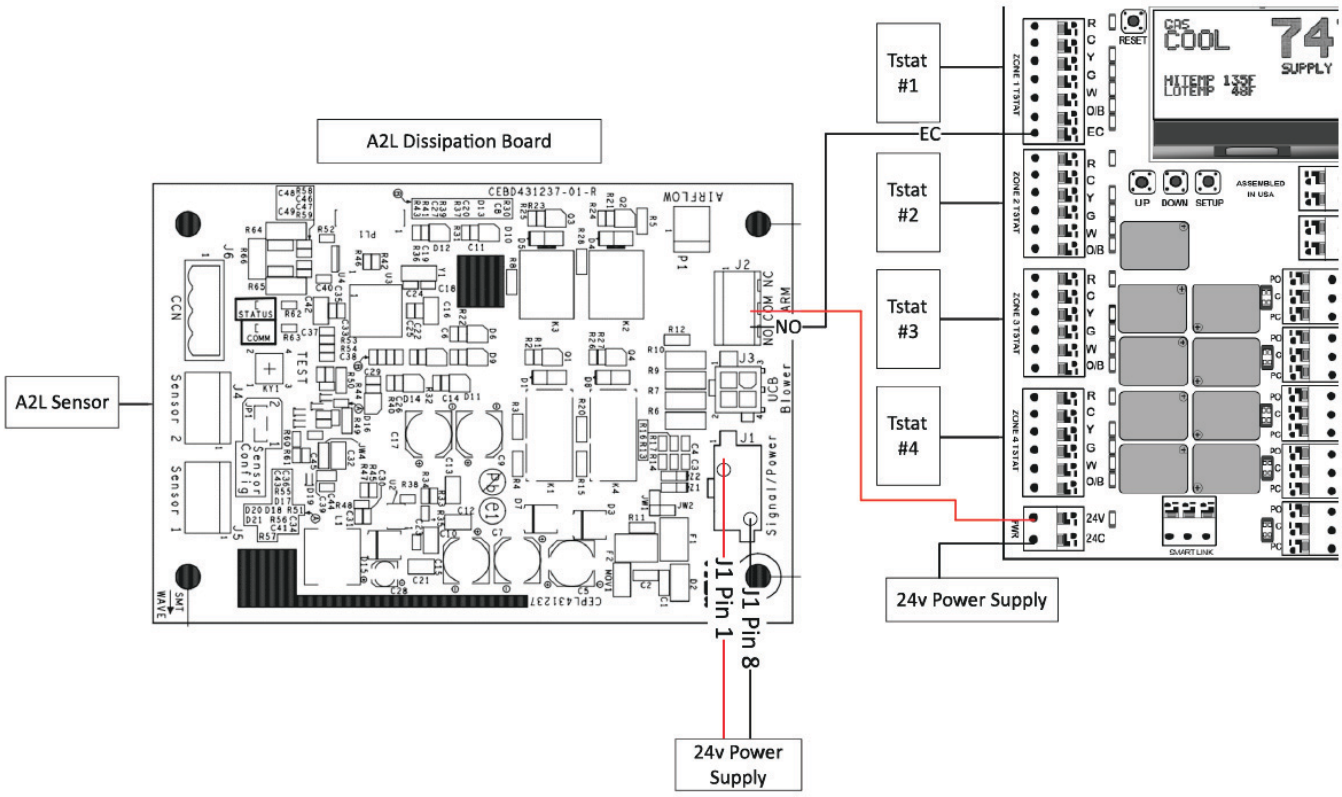

A240407

Fig. 3 – Dissipation Control Wiring

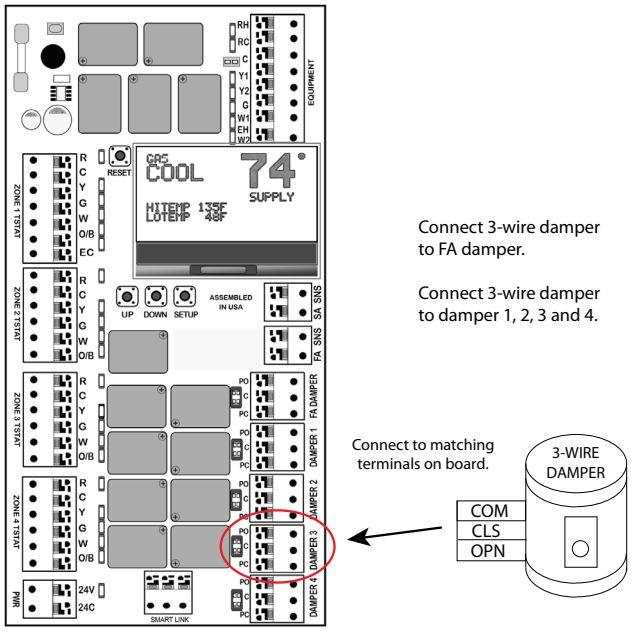

A210202

Fig. 4 – Controller Wiring

Supply Air Temperature Sensor (SAS) (Fig. 5)

Sensor Placement (Location)

Gas/Electric - Electric/Electric

The SAS should be located in the Supply Air Plenum where it will sense AVERAGE air temperature within the Plenum. The ideal placement is 2 to 4 feet beyond the evaporator coil. Make sure the sensor is in the air stream and secured properly.

Heat Pump

The SAS should be located inside the air handler cabinet AFTER the evaporator coil but BEFORE the blower. Make sure the sensor is in the air stream and properly secured.

Return Air Sensor (RAS)

Sensor Placement (Location)

The RAS should be located in the return air plenum before the blower or evaporator coil section where it will sense the AVERAGE return air temperature entering the air handler or furnace. Make sure the sensor is in the air stream and properly secured.

Optional Fresh Air/Outdoor Air Sensor (FAS)

The OAS should be located under the eave of the structure or under a ledge on the outdoor unit where it will not be in direct sunlight. Secure the sensor in place and connect to the controller with thermostat wire and the included plug-in connector. Best location for FAS is the North Side.

A/C - Gas Furnace and A/C - Electric Furnace

Using 18 gauge solid thermostat wire, connect the Equipment Control Wires from the Indoor Unit to the EQUIPMENT terminal block on the top right corner of the Controller (Fig. 6). Use the terminal labeled W1/EH for first stage heat. If using a two-stage furnace, connect W2/OB to W2 on the indoor equipment. Connect R from the equipment to RC on the controller.

Connect C from the equipment to C on the Controller.

IMPORTANT: The C terminal from the equipment must be connected to the controller from the equipment for the RC AND RH LEDs to illuminate. Power from the equipment transformer will illuminate the RC and RH terminal LEDs, indicating the equipment transformer is connected.

NOTE: If using a 2-transformer system, with separate cooling and heating transformers, connect the R from the cooling transformer to RC on the controller. Connect the R from the heating transformer to RH on the controllers. **Remove the black jumper located just below the RC/RH LEDs to separate the power inputs**.

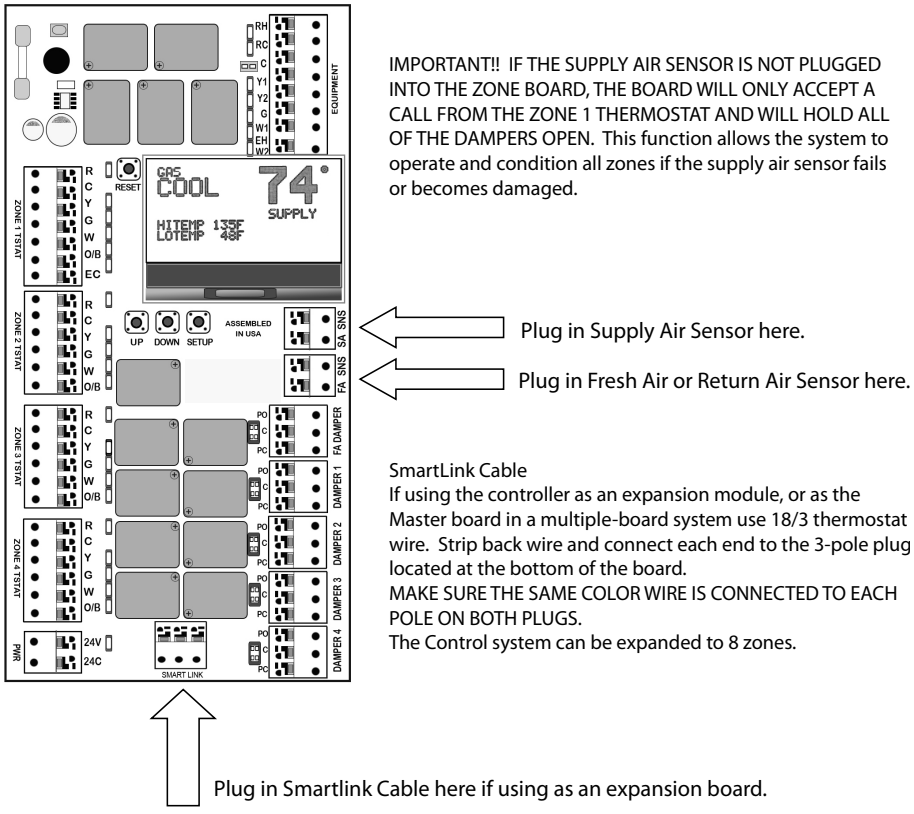

A210203

Fig. 5 – Sensor Wiring

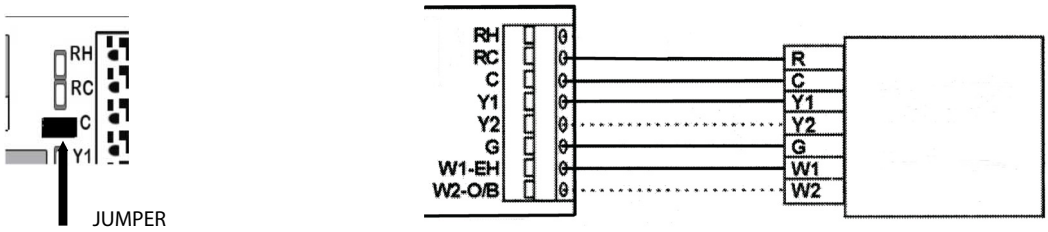

A210204

Fig. 6 – A/C Gas or Electric Furnace Wiring

Electric Heat Pump

Using 18 gauge solid thermostat wire, connect the Equipment Control Wires from the Indoor Unit to the EQUIPMENT terminal block on the top right corner of the Controller (Fig. 7). Use the terminal labeled W1/EH for the auxiliary heat strips.

Connect the W2/OB terminal to the O/B terminal on the equipment (REVERSING VALVE). Connect R from the equipment to RC on the Controller. Connect C from the equipment to C on the Controller.

IMPORTANT: The C terminal from the equipment must be connected to the controller from the equipment for the RC AND RH LEDs to illuminate. Power from the equipment transformer will illuminate the RC and RH terminal LEDs, indicating the equipment transformer is connected.

NOTE: The jumper for RH/RC should NOT be removed on a heat pump system.

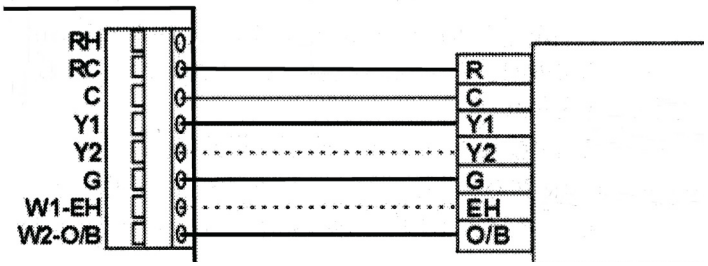

A210205

Fig. 7 – Electric Heat Pump Wiring

Bypass Elimination on Single-Speed Systems

When the board is set up for 1-speed outdoor unit, the board will energize Y-2 to the equipment if more than one zone is calling. This allows the use of a 2-speed or multi-speed indoor unit with a Y-1 and Y-2 terminal. The indoor fan speeds can be set up to run on a lower speed on Y-1, and a higher speed on Y-2, eliminating the need for a bypass damper.

When using the controller as an expansion module you must connect 24 VAC input power to the expansion controller(s) (Fig. 8). Power IS NOT supplied by the communication cable. If using only one transformer to supply the master and expansion controller, calculate the power needed for all boards, thermostats and damper actuators to determine the correct size. (See Page 2 in the Installation Guide). On larger installations, more than one transformer may be needed.

A communication cable must be installed via the 3-pole plug-in connector at the bottom of the board. Use standard18-3 thermostat wire.

If it is determined that a bypass should be used, select the appropriately sized bypass damper, either barometric or actively controlled, to limit the static pressure in the system.

IMPORTANT: No CAT5 cable is needed. Be sure to connect the same color wire in each position! (Example - Red wire in all left positions, White wire in all center positions, Green wire in all right positions)

After all wiring is complete, turn on the 24 VAC input power to all of the controllers. On the slave controller, push the setup button. Change the board type to “EXPANSION”. Press the setup button again to set the slave address.

The default expansion address is 1. Each controller will need its own address. The second expansion controller will be address 2. Press the setup button and set the equipment type. (If setting up for electric heat pump or dual fuel, the menu will ask you to set the thermostat type for each zone). Press the setup button to exit the configuration menu. The display will show that the controller is an “EXPANSION” and will show “COMM” at the bottom of the display. If “NO COMM” is displayed, check communication wiring connections.

After the expansion controller is configured, press the RESET button on all of the controllers. This will clear the communication bus and allow the expansion controller to make equipment calls.

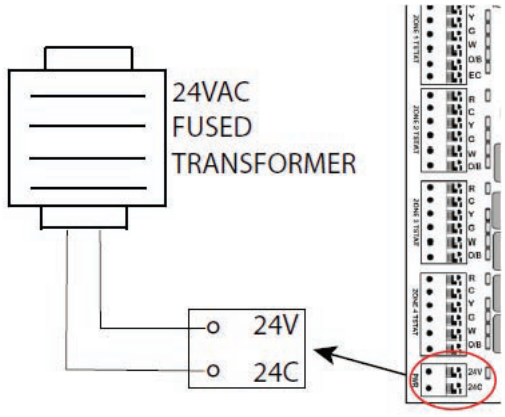

A240420

Fig. 8 – Expansion Panel Power Wiring

Configuration and Setup

The controller has a state of the art microprocessor for reliable control of the equipment and zone dampers.

The simple step by step setup eliminates the need for confusing dip switches. The full status back-lit LCD display guides you through each step of the setup process. Depending on the type of equipment selected, the display will show you each available Option for the system type selected.

Make sure that all wiring for the thermostats, zone dampers and equipment is complete. The RH and RC LEDs should be illuminated. The connectors from the Supply Air Sensor (SAS) should be plugged firmly into the receptacle marked SA SNS on the controller. If using a Return Air Sensor (RAS) or Fresh Air Sensor (OAS) the connectors should be firmly plugged into the receptacle marked FA SNS on the controller. If using the controller as an expansion module, the wiring should be firmly plugged into the receptacle marked SMART LINK at the bottom of the controller. Apply power from the 24VAC transformer connected to the PWR connector on the controller. The controller will power up and display a splash screen on the LCD display. The red R LEDs for all thermostats and the green LEDs for all dampers will illuminate. The display will then show the factory default settings for the controller.

IMPORTANT: If you go past the desired setup Option, press the RESET button to start over.

Press the SETUP button to enter the configuration mode. The screen will display the SETUP MENU and Option #01 - SET BOARD FUNCTION. The factory default is MAIN. If using the controller as an expansion module, press the UP or DOWN button to change to EXPANSION. Press the SETUP button to proceed to the next Option. (NOTE: If using the controller as an expansion module, the next selection will be Option #02 - SET EXPANSION ADDRESS.) Each expansion board will have its own address, numbered 1 or 2. The default address is 1. If using more than one expansion board, the second expansion board will be address 2. Press the SETUP button to proceed to the next Option.

A/C Gas Heat and A/C Electric Heat

Option #03 - Set System Type

The default setting is A/C - GAS HEAT. Use the up button to select A/C - ELEC HEAT.

Press the SETUP button to proceed to the next Option.

Option #05 - Set Outdoor Unit Speed

The default setting is 1-SPEED. Press the UP or DOWN button to change to 2-SPEED.

Press the SETUP button to proceed to the next Option.

Option #09 - Set Hi-Temp Cutout

The default setting is 135° F (60° C). Press the UP or DOWN button to change the temperature. The adjustable range is 125–150° F (57–65° C).

Press the SETUP button to proceed to the next Option.

NOTE: When using electric furnace, the HI-TEMP CUT-OUT should be set no higher than 125° F (52° C).

Option #10 - Set Low-Temp Cutout

The default setting is 44° F (8°C). Press the UP or DOWN button to change the temperature. The adjustable range is 40–52° F (4–11° C).

Press the SETUP button to proceed to the next Option.

Option #14 - Set Fresh Air Mode

The default setting is OFF. Press the UP or DOWN button to turn ON. Press the SETUP button to proceed to the next Option.

NOTE: If Fresh Air mode is OFF, the next Option is Option #16.
If Fresh Air mode is ON, the next Option is Option #15.

Option #15 - Set Fresh Air Outside Setpoint

The default setting is 55° F (12° C). Press the UP or DOWN button to change the temperature. The adjustable range is 50–75° F (10–24° C).

Press the SETUP button to proceed to the next Option.

Option #16 - Set Fresh Air Min/Hr

The factory default is 0 minutes. Press the UP button to add fresh air minutes. The adjustable range is 0 to 60 minutes per hour, adjustable in 5 minute increments. NOTE: THIS Option IS ONLY AVAILABLE IF Option #14 (Fresh Air) IS TURNED OFF.

Press the SETUP button to proceed to the next Option.

NOTE: If fresh air minutes are GREATER than ZERO (0) then the next Option will be Option #17. If fresh air minutes are set at ZERO (0), and the Equipment Stage is set for 1-Stage, then the next Option will be Option #22. If the Equipment Stage is set for 2-Stage, the next Option will be Option #21.

Option #17 - Set Fresh Air Sensor Mode

The factory default is OFF. Press the UP or DOWN button to turn the sensor ON. (NOTE: If there is no sensor detected plugged into the FA SNS receptacle on the controller, the controller will display INSTALL FA SENSOR). After the sensor is plugged in, press the RESET button to clear the error message. Press the SETUP button several times until Option #17 appears on the display. Press the SETUP button to turn the sensor ON.

Press the setup button to proceed to the next Option.

NOTE: If the fresh air sensor mode is set to ON, then the next Option will be Option #18. If the fresh air sensor mode is set to OFF, and the Equipment Stage is set for 1-Stage, then the next Option will be Option #22. If the Equipment Stage is set for 2-Stage, then the next Option will be Option #21.

Option #18 - Set Fresh Air Lo-Temp Lockout

The factory default is 20° F (-6° C). Press the UP or DOWN button to change the temperature. The adjustable range is 20–40° F (-6–4° C).

Press the SETUP button to proceed to the next Option.

Option #19 - Set Fresh Air Hi-Temp Lockout

The factory default is **80° F (26° C)**. Press the **UP** or **DOWN** button to change the temperature. The adjustable range is **60°** to **100° F (15°** to **37° C)**.

Press the **SETUP** button to proceed to the next Option.

NOTE: If the Equipment Stage is set for 1-Stage, the next Option will be Option #22. If the Equipment Stage is set for 2-Stage, the next Option will be OPTON #21.

Option #21 - Set Second Stage Lockout

The factory default is OFF. Press the UP or DOWN button to turn ON. When this Option is turned ON, the controller WILL NOT ENERGIZE 2ND STAGE if only ONE ZONE is calling.

Press the SETUP button to proceed to the next Option.

It is recommended that this Option be turned ON.

Option #22 - Set Zone 1 Priority

The factory default is OFF. Press the UP or DOWN button to turn ON. When this Option is turned on, any call from the ZONE 1 THERMOSTAT will override any call from the ZONE 2, 3 or 4 THERMOSTAT. If a call exists on any thermostat other than the ZONE 1 THERMOSTAT, and an opposing call is made from the ZONE 1 THERMOSTAT, the system will immediately to into a 3-minute PURGE and then will turn on the equipment based on the call from the ZONE 1 THERMOSTAT.

Press the SETUP button to proceed to the next Option.

Option #23 - Set Auto Changeover Time

The factory default is 10 minutes. Press the up or down button to change the setting to 15 MINUTES. This setting determines the amount of time that elapses after an opposing call occurs and the system changes over to the opposing call.

Press the SETUP button to proceed.

NOTE: If the equipment stage is set for 1-STAGE, pressing the SETUP button will exit the configuration mode. If the equipment stage is set for 2-STAGE then the setup will proceed to Option #25.

Option #25 - Allow Zone 1 Thermostat Staging

The default setting is OFF. Press the UP or DOWN button to turn ON. When this setting is ON, the controller will accept a 2nd stage call from the Zone 1 Thermostat.

NOTE: When this Option is turned ON, Zone 1 will disregard 2nd Stage Lockout if Option #21 is turned ON.

NOTE: This Option will only be available if Option #05 is set for 2-STAGE.

Press the SETUP button to proceed to the next Option.

Option #26 - Set 2nd Stage Cut-In Time Based on Time Only

The default setting is OFF. Press the UP or DOWN button to turn to ON.

Press the SETUP button to proceed to the next Option

Option #27 - Set 2nd Stage Cut-In Time Based onTime and Temperature

(THIS Option ONLY APPEARS IF Option #26 IS TURNED OFF). The default setting is 8 MINS. Press the DOWN button to change the setting to 6 MINS or 4 MINS.

Press the SETUP button to proceed to the next Option.

Option #28 - Set 2nd Stage Cut-In Time (Time Only)

(THIS Option ONLY APPEARS IF Option #26 IS TURNED ON). The default setting is 15 MINS. Press the UP or DOWN button to change to 10 MINS or 20 MINS.

Press the SETUP button to exit the setup menu.

Manufacturer reserves the right to change, at any time, specifications and designs without notice and without obligations.

Electric Heat Pump - Electric Auxiliary Heat

Press the SETUP button to enter the configuration mode. The screen will display the SETUP MENU AND Option #03 - SET SYSTEM TYPE. The default setting is A/C - GAS ELECTRIC. Press the UP button twice to change the system to ELECTRIC HEAT PUMP.

Press the SETUP button to proceed to the next Option.

Option #04 - Set Temperature Display

The default setting is FAHRENHEIT. Press the UP or DOWN button to change the setting to CELCIUS.

Press the SETUP button to proceed to the next Option.

Option #05 - Set Outdoor Unit Speed

The default setting is 1-SPEED. If using single stage equipment, press the SETUP button to proceed to the next Option. If using 2-stage equipment, press the UP or DOWN button to select 2-SPEED.

Press the SETUP button to proceed to the next Option.

Option #06 - Set Thermostat 1 Type

The default setting is GAS/ELECTRIC. Press the UP or DOWN button to change to HEAT PUMP. Press the SETUP button to SET THERMOSTAT 2 TYPE. Repeat for the Zone 3 and Zone 4 Thermostats The default setting is GAS/ELECTRIC. Press the UP or DOWN button to change to HEAT PUMP.

NOTE: A heat pump thermostat with an emergency heat switch MUST be installed on Zone 1 to manually turn on auxiliary heat.

Press the SETUP button to proceed to the next Option.

Option #07 - Set Reversing Valve Actuation

The default setting is REV-O. Press the UP or DOWN button to change to REV-B.

NOTE: When set as REV-O, the reversing valve will energize in COOLING. When set as REV-B, the reversing valve will energize in HEATING.

Press the SETUP button to proceed to the next Option.

Option #10 - Set Lo-Temp Cutout

The default setting is 44° F (6° C). Press the UP or DOWN button to change the temperature. The adjustable range is 40 F to 52 F (4° to 11° C).

Press the SETUP button to proceed to the next Option.

Option #11 - Set Heat Pump Hi-Temp Cutout

The default setting is 120° F (48° C). Press the UP or DOWN button to change the setting. The adjustable range is 110–125° F (43–52° C).

Press the SETUP button to proceed to the next Option.

NOTE: If Option #05 is set for 1-STAGE, the next Option will be Option #12. If Option #05 is set for 2-STAGE, the next Option will be Option #14.

Option #12 - Set Aux Heat Cut-In Temp

The default is 90° F (32° C). Press the UP or DOWN button to change the setting. The adjustable range is 90–100° F (32–37° C).

Press the SETUP button to proceed to the next Option.

NOTE: This Option only available on 1-STAGE systems.

Option #13 - Set Aux Heat Cut-In Time

The default is 6 Mins. Press the UP or DOWN button to change the setting. The adjustable range is 3–6 MINS.

Press the SETUP button to proceed to the next step.

NOTE: This Option only available on 1-STAGE systems.

Option #14 - Set Fresh Air Mode

The default setting is OFF. Press the UP or DOWN button to turn ON.

Press the SETUP button to proceed to the next Option.

NOTE: If Fresh Air mode is OFF, the next Option is Option #16. If Fresh Air mode is ON, the next Option is Option #15.

Option #15 - Set Fresh Air Outside Setpoint

The default setting is 55° F (12° C). Press the UP or DOWN button to change the temperature. The adjustable range is 50–75° F (10–24° C).

Press the SETUP button to proceed to the next Option.

Option #16 - Set Fresh Air Min/Hr

The factory default is 0 minutes. Press the UP button to add fresh air minutes. The adjustable range is 0–60 minutes per hour, adjustable in 5 minute increments.

NOTE: This Option is ONLY available if Option #14 (Fresh Air) is turned OFF.

Press the **SETUP** button to proceed to the next Option.

NOTE: If fresh air minutes are GREATER than ZERO (0) then the next Option will be Option #17. If fresh air minutes are set at ZERO (0), and the Equipment Stage is set for 1-Stage, then the next Option will be Option #22. If the Equipment Stage is set for 2-Stage, the next Option will be Option #21

Option #17 - Set Fresh Air Sensor Mode

The factory default is OFF. Press the UP or DOWN button to turn the sensor ON. (NOTE: If there is no sensor detected plugged into the FA SNS receptacle on the controller, the controller will display INSTALL FA SENSOR). After the sensor is plugged in, press the RESET button to clear the error message. Press the SETUP button several times until Option #17 appears on the display. Press the SETUP button to turn the sensor ON.

Press the setup button to proceed to the next Option.

NOTE: If the fresh air sensor mode is set to ON, then the next Option will be Option #18. If the fresh air sensor mode is set to OFF, and the Equipment Stage is set for 1-Stage, then the next Option will be Option #22. If the Equipment Stage is set for 2-Stage, then the next Option will be Option #21.

Option #18 - Set Fresh Air Lo-Temp Lockout

The factory default is 20° F (-6° C). Press the UP or DOWN button to change the temperature. The adjustable range is 20–40° F (-6–4° C).

Press the SETUP button to proceed to the next Option.

Option #19 - Set Fresh Air Hi-Temp Lockout

The factory default is 80° F (26° C). Press the UP or DOWN button to change the temperature. The adjustable range is 60–100° F (15–37° C).

Press the SETUP button to proceed to the next Option.

NOTE: If the Equipment Stage is set for 1-Stage, the next Option will be Option #22. If the Equipment Stage is set for 2-Stage, the next Option will be OPTON #21.

Option #21 - Set Second Stage Lockout

The factory default is OFF. Press the UP or DOWN button to turn ON. When this Option is turned ON, the controller WILL NOT ENERGIZE 2ND STAGE if only ONE ZONE is calling.

Press the SETUP button to proceed to the next Option.

NOTE: This Option will only appear if Option #05 is set for 2-STAGE equipment.

Option #22 - Set Zone 1 Priority

The factory default is OFF. Press the UP or DOWN button to turn ON. When this Option is turned on, any call from the ZONE 1 THERMOSTAT will override any call from the ZONE 2, 3 or 4 THERMOSTAT. If a call exists on any thermostat other than the ZONE 1 THERMOSTAT, and an opposing call is made from the ZONE 1 THERMOSTAT, the system will immediately to into a 3-minute PURGE and then will turn on the equipment based on the call from the ZONE 1 THERMOSTAT.

Press the SETUP button to proceed to the next Option.

Option #23 - Set Auto Changeover Time

The factory default is 10 minutes. Press the up or down button to change the setting to 15 minutes. This setting determines the amount of time that elapses after an opposing call occurs and the system changes over to the opposing call.

Press the SETUP button to proceed to the next Option.

Option #24 - Disable Aux Heat Staging Above 40 Deg

The default setting is OFF. Press the UP or DOWN button to turn ON. When this feature is turned ON, the controller will not stage on Auxiliary Heat if the outdoor temperature is above 40° F (4° C).

Press the SETUP button to proceed to the next Option.

NOTE: This Option REQUIRES the use of a FRESH AIR SENSOR connected to the controller.

Option #25 - Allow Zone 1 Thermostat Staging

The default setting is OFF. Press the UP or DOWN button to turn ON. When this setting is ON, the controller will accept a 2nd stage call from the Zone 1 Thermostat.

NOTE: When this Option is turned ON, Zone 1 will disregard 2nd Stage Lockout if Option #21 is turned ON.

NOTE: This Option will only be available if Option #05 is set for 2-STAGE.

Press the **SETUP** button to proceed to the next Option.

Option #26 - Set 2nd Stage Cut-In Time Based on Time Only

The default setting is OFF. Push the UP or DOWN button to turn setting ON.

Press the SETUP button to proceed to the next Option.

Option #27 - Set 2nd Stage Cut-In Time Based on Time and Temperature

The default setting is 8 MINS. Push the DOWN button to change the timing to 6 MINS or 4 MINS.

Press the SETUP button to proceed to the next Option.

Option #28 - Set 2nd Stage Cut-In Time (Time Only)

The default setting is 15 MINS. Push the UP button to change to 20 MINS or the DOWN button to change to 10 MINS.

Press the SETUP button to exit the setup menu.

Dual Fuel Heat Pump (Hybrid Heat)

Press the SETUP button TWO TIMES to enter the configuration mode. The screen will display the SETUP MENU AND Option #03 - SET SYSTEM TYPE. The default setting is A/C - GAS ELECTRIC. Press the UP button three times to change the system to DUAL FUEL HEAT PUMP.

NOTE: The outdoor FRESH AIR SENSOR MUST be plugged into the controller to configure for DUAL FUEL HEAT PUMP. If the sensor is NOT plugged in, the screen will display INST FA SNSR FOR DFHP.

After installing the FRESH AIR SENSOR, press the RESET button to re-enter the configuration mode.

Press the SETUP button to proceed to the next Option.

Option #04 - Set Temperature Display

The default setting is FAHRENHEIT. Press the UP or DOWN button to change the setting to CELCIUS.

Press the SETUP button to proceed to the next Option.

Option #05 - Set Outdoor Unit Speed

The default setting is 1-SPEED. If using single stage equipment, press the SETUP button to proceed to the next Option. If using 2-stage equipment, press the UP or DOWN button to select 2-SPEED.

Press the SETUP button to proceed to the next Option.

Option #06 - Set Thermostat 1 Type

The default setting is GAS/ELECTRIC. Press the UP or DOWN button to change to HEAT PUMP. Press the SETUP button to SET THERMOSTAT 2 TYPE. Repeat for the Zone 3 and Zone 4 Thermostats The default setting is GAS/ELECTRIC. Press the UP or DOWN button to change to HEAT PUMP.

NOTE: A heat pump thermostat with an emergency heat switch MUST be installed on Zone 1 to manually turn on auxiliary heat.

Press the SETUP button to proceed to the next Option.

Option #07 - Set Reversing Valve Actuation

The default setting is REV-O. Press the UP or DOWN button to change to REV-B.

NOTE: When set as REV-O, the reversing valve will energize in COOLING. When set as REV-B, the reversing valve will energize in HEATING.

Press the SETUP button to proceed to the next Option.

Option #09 - Set Gas Hi-Temp Cutout

The default setting is 135° F (60° C). Press the UP or DOWN button to change the temperature. The adjustable range is 125–150° F (57–65° C).

Press the SETUP button to proceed to the next Option.

Option #10 - Set Lo-Temp Cutout

The default setting is 44° F (6° C). Press the UP or DOWN button to change the temperature. The adjustable range is 40–52° F (4–11° C).

Press the SETUP button to proceed to the next Option.

Option #11 - Set Heat Pump Hi-Temp Cutout

The default setting is 120° F (48° C). Press the UP or DOWN button to change the setting. The adjustable range is 110–125° F (43–52° C).

Press the SETUP button to proceed to the next Option.

NOTE: If Option #05 is set for 1-STAGE, the next Option will be Option #12. If Option #05 is set for 2-STAGE, the next Option will be Option #14.

Option #12 - Set Aux Heat Cut-In Temp

The default is 90° F (32° C). Press the UP or DOWN button to change the setting. The adjustable range is 90–100° F (32–37° C).

Press the SETUP button to proceed to the next Option.

NOTE: This Option is only available on 1-STAGE systems.

Option #13 - Set Aux Heat Cut-in Time

The default is 6 Mins. Press the UP or DOWN button to change the setting. The adjustable range is 3–6 MINS, 10 MINS, 15 MINS AND 20 MINS.

Press the SETUP button to proceed to the next step.

NOTE: This Option is only available on 1-STAGE systems.

Option #14 - Set Fresh Air Mode

The default setting is OFF. Press the UP or DOWN button to turn ON.

Press the SETUP button to proceed to the next Option.

NOTE: If Fresh Air mode is OFF, the next Option is Option #16. If Fresh Air mode is ON, the next Option is Option #15.

Option #15 - Set Fresh Air Outside Setpoint

The default setting is 55° F (13° C). Press the UP or DOWN button to change the temperature. The adjustable range is 50–75° F (10–24° C).

Press the SETUP button to proceed to the next Option.

Option #16 - Set Fresh Air Min/Hr

The factory default is 0 minutes. Press the UP button to add fresh air minutes. The adjustable range is 0 to 60 minutes per hour, adjustable in 5 minute increments.

NOTE: This Option is only available if Option #14 (Fresh Air) is turned OFF.

Press the SETUP button to proceed to the next Option.

NOTE: If fresh air minutes are GREATER than ZERO (0) then the next Option will be Option #17. If fresh air minutes are set at ZERO (0), and the Equipment Stage is set for 1-Stage, then the next Option will be Option #22. If the Equipment Stage is set for 2-Stage, the next Option will be Option #21.

Option #17 - Set Fresh Air Sensor Mode

The factory default is OFF. Press the UP or DOWN button to turn the sensor ON.

NOTE: If there is no sensor detected plugged into the FA SNS receptacle on the controller, the controller will display INSTALL FA SENSOR.

After the sensor is plugged in, press the RESET button to clear the error message. Press the SETUP button several times until Option #17 appears on the display. Press the SETUP button to turn the sensor ON.

NOTE: If the fresh air sensor mode is set to ON, then the next Option will be Option #18. If the fresh air sensor mode is set to OFF, and the Equipment Stage is set for 1-Stage, then the next Option will be Option #22. If the Equipment Stage is set for 2-Stage, then the next Option will be Option #21.

Press the SETUP button to proceed to the next Option.

Option #18 - Set Fresh Air Lo-Temp Lockout

The factory default is 20° F (-6° C). Press the UP or DOWN button to change the temperature. The adjustable range is 20–40° F (-6–4° C).

Press the SETUP button to proceed to the next Option.

Option #19 - Set Fresh Air Hi-Temp Lockout

The factory default is 80° F (26° C). Press the UP or DOWN button to change the temperature. The adjustable range is 60–100° F (15–37° C).

Press the SETUP button to proceed to the next Option.

NOTE: If the Equipment Stage is set for 1-Stage, the next Option will be Option #22. If the Equipment Stage is set for 2-Stage, the next Option will be OPTON #21.

Option #20 - Set Dual Fuel HP Outdoor Lo-Temp Lockout

The factory default is 30° F (-1° C). Press the UP or DOWN button to change. The adjustable range is 20–45° F (-6 to 7° C).

Press the SETUP button to proceed to the next Option.

NOTE: The controller will display F/A and the outdoor temperature

Option #21 - Set Second Stage Lockout

The factory default is **OFF**. Press the **UP** or **DOWN** button to turn **ON**. When this Option is turned **ON**, the controller **WILL NOT ENERGIZE 2ND STAGE** if only **ONE ZONE** is calling.

Press the **SETUP** button to proceed to the next Option.

NOTE: This Option will only appear if Option #05 is set for 2-STAGE equipment.

Option #22 - Set Zone 1 Priority

The factory default is **OFF**. Press the **UP** or **DOWN** button to turn **ON**. When this Option is turned on, any call from the **ZONE 1 THERMOSTAT** will override any call from the ZONE 2, 3 or 4 THERMOSTAT. If a call exists on any thermostat other than the ZONE 1 THERMOSTAT, and an opposing call is made from the ZONE 1 THERMOSTAT, the system will immediately to into a **3-minute PURGE** and then will turn on the equipment based on the call from the ZONE 1 THERMOSTAT.

Press the **SETUP** button to proceed to the next Option.

Option #23 - Set Auto Changeover Time

The factory default is 10 minutes. Press the up or down button to change the setting to 15 MINUTES. This setting determines the amount of time that elapses after an opposing call occurs and the system changes over to the opposing call.

Press the SETUP button to proceed to the next Option.

Option #24 - Disable Aux Heat Staging Above 40°F (4°C)

The default setting is OFF. Press the UP or DOWN button to turn ON. When this feature is turned ON, the controller WILL NOT stage on Auxiliary Heat if the OUTDOOR TEMPERATURE is above 40° F (4° C).

Press the **SETUP** button to proceed to the next Option.

NOTE: This Option REQUIRES the use of a FRESH AIR SENSOR connected to the controller.

Option #25 - Allow Zone 1 Thermostat Staging

The default setting is OFF. Press the UP or DOWN button to turn ON. When this setting is ON, the controller will accept a 2nd stage call from the Zone 1 Thermostat.

NOTE: When this Option is turned ON, Zone 1 will DISREGARD 2ND STAGE LOCKOUT if Option #21 is turned ON.

NOTE: This Option will only be available if Option #05 is set for 2-STAGE.

Press the SETUP button to proceed to the next Option.

Option #26 - Set 2nd Stage Cut-In Time Based on Time Only

The default setting is **OFF**. Push the **UP** or **DOWN** button to turn setting **ON**.

Press the **SETUP** button to proceed to the next Option.

Option #27—Set 2nd Stage Cut-In Time Based on Time and Temperature

The default setting is **8 MINS**. Push the **DOWN** button to change the timing to **6 MINS** or **4 MINS**.

Press the **SETUP** button to proceed to the next Option.

Option #28—Set 2nd Stage Cut-In Time (Time Only)

The default setting is **15 MINS.** Push the **UP** button to change to **20 MINS** or the **DOWN** button to change to **10 MINS**.

Press the **SETUP** button to exit the setup menu.

Press the SETUP button to exit the configuration mode.

Sequence of Operation

Single Stage Cooling (A/C and Heat Pump)

On any cooling call from one of the thermostats, the controller will energize the **Y1** and **G** outputs to the equipment. The damper for the zone calling will remain open, and the damper for the zone NOT calling will close. During this call, if the other zone makes a cooling call, the zone damper will open. When a thermostat becomes satisfied, and if a call exists from the other thermostat, the damper on the satisfied zone will close. Once the other thermostat becomes satisfied, the controller will de-energize the **Y1** and **G** outputs to the equipment, and both dampers will open (system idle).

Low Temp Cutout

During a cooling call, if the Supply Air Temperature falls BELOW the LOW TEMP CUTOUT temperature, the controller will de-energize the **Y1** output to the equipment and will leave the **G** output energized. A 3-minute DELAY TIMER will be displayed. After the 3-minute delay, if the Supply Air Temperature has risen ABOVE the LOW TEMP CUTOUT temperature, the controller will re-energize the **Y1** output to the equipment.

Two Stage Cooling (A/C and Heat Pump)

The controller utilizes built-in intelligent SmartStaging. This allows the use of single-stage thermostats on both zones. The controller will energize and de-energize second stage based on elapsed run time and the supply air temperature, or elapsed time only. If set up for time and temperature, on an initial call for cooling, the controller will energize the

Y1 and **G** outputs to the equipment. After an initial run time of 8 MINUTES, (adjustable to 6 mins or 4 mins) if the supply air temperature has not fallen to at least **10° F (6° C)** above the low temp cutout, the controller will energize **Y2** to the equipment. **Y2** will stay energized until the supply air temperature falls below **4° F (1° C)** above the low temp cutout. The controller will then turn off **Y2**. This cycle will continue as the supply air temperature rises and falls. If set up for time only, the controller will energize **Y2** after an initial run time of **20 mins, 15 mins or 10 mins** (Fig. 9).

Single Stage Heating (Gas & Electric Heat; NOT Heat Pump)

On any heating call from one of the thermostats, the controller will energize the W1 output to the equipment. After 90 SECONDS of initial run time, the controller will energize the G output to the equipment. If the supply air temperature rises above the HI TEMP CUTOUT setting, the controller will de-energize the W1 output to the equipment. After a 3-minute time delay, if a call still exists and the supply air temperature has fallen below the HI TEMP CUTOUT, the controller will re-energize the W1 output to the equipment.

Two Stage Heating (Gas& Electric Heat; NOT Heat Pump)

On any heating call from one of the thermostats, the controller will energize the W1 output to the equipment. After 90 SECONDS of initial run time, the controller will energize the G output to the equipment. After 8 MINUTES of initial run time, if the supply air temperature has not risen to at least 25°F BELOW the HI TEMP CUTOUT, the controller will energize W2 to the equipment. The system will run in second stage heating until the supply air temperature rises to 10°F below the HI TEMP CUTOUT. The controller will then de-energize W2. If the supply air temperature falls to 25°F below the HI TEMP CUTOUT, the controller will re-energize W2. This staging will continue until the thermostat is satisfied and the controller turns off the equipment (Fig. 10).

Single Stage Heating - Heat Pump

On any heating call from one of the thermostats (Y if using heat pump thermostats, W if using gas/electric thermostats) the controller will energize the Y1 and G outputs to the equipment. A 3-minute minimum run timer will be displayed. After 6 MINUTES of initial run time (Factory default. Adjustable 3-6 minutes) if the supply air temperature has not reached 90° F (32° C) (Factory default. Adjustable 90–100° F [32–37° C]) the controller will energize the W1 output to the equipment (Auxiliary Heat). The equipment will continue to run in AUXILIARY HEAT until the supply air temperature rises to 10° F above the AUXILIARY HEAT CUT-IN TEMPERATURE. (Adjusts with Aux. Heat Cut-In Setting). The controller will continue to stage auxiliary heat on and off based on supply air temperature. If the supply air temperature rises above the HI TEMP CUT-OUT temperature, the controller will de-energize the Y1 output to the equipment and leave the G output energized. A 3-minute compressor delay timer will be displayed. After 3 minutes, if the supply air temperature has fallen below the HI TEMP CUT-OUT temperature, the controller will re-energize the Y1 output to the equipment. See Fig. 11 below.

Two Stage Heating - Heat Pump

On any heating call from one of the thermostats (Y if using heat pump thermostats, W if using gas/electric thermostats) the controller will energize the Y1 and G outputs to the equipment. After 4 minutes of initial run time, if the supply air temperature has not reached 105°F (41°c) (15°F below the HIGH TEMP CUTOUT), the controller will energize Y2 to the equipment. Y2 will remain energized until the supply air temperature reaches 115°F (46°C) (5 degrees below the HIGH TEMP CUTOUT). The controller will then de-energize Y2. The controller will continue to stage Y2 on and off based on the supply air temperature.

After 6 MINUTES of initial run time, if the supply air has not reached at least 90°F (32°C), the controller will energize W1 to turn on auxiliary heat. W1 will remain energized until the supply air temperature reaches 100°F (38°C) (20°F below the HIGH TEMP CUTOUT). See Fig. 11 below.

NOTE: AUX heat time and temperature staging is not manually adjustable on two-speed heat pump equipment. The second stage and AUX heat staging temperatures move up and down based on the high temp cutout setting.

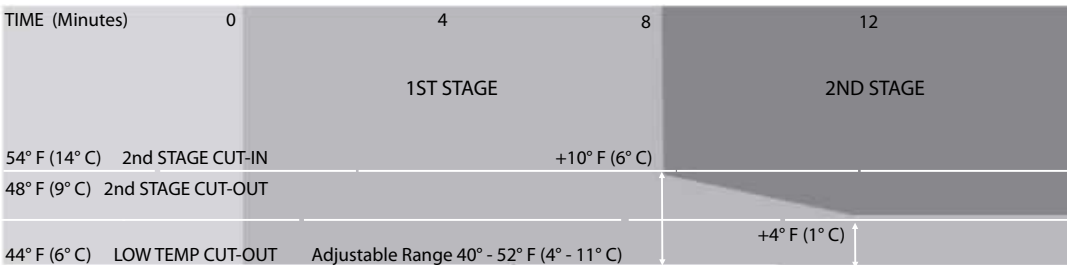

A210207

Fig. 9 – A/C and Heat Pump Cooling Example Based on Factory Settings

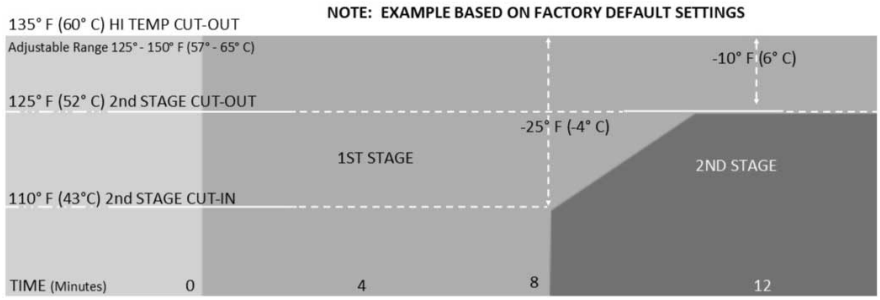

A210208

Fig. 10 – Gas & Electric Heat (not Heat Pump) Example Based on Factory Settings

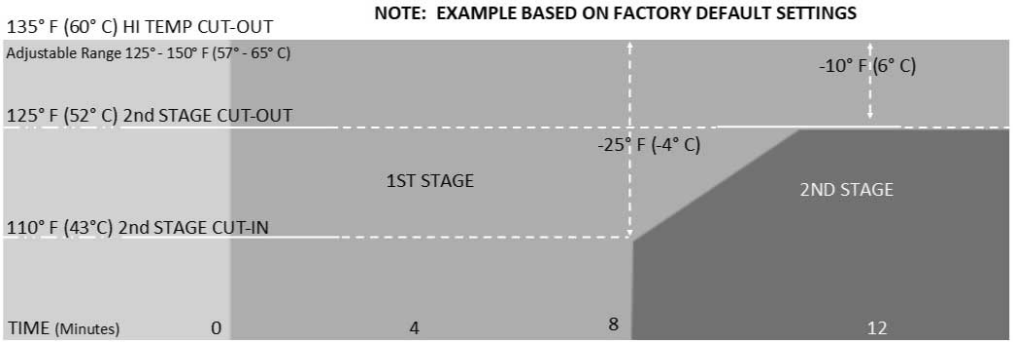

A210209

Fig. 11 – Two Stage Heating (Heat Pump) Example Based on Factory Settings

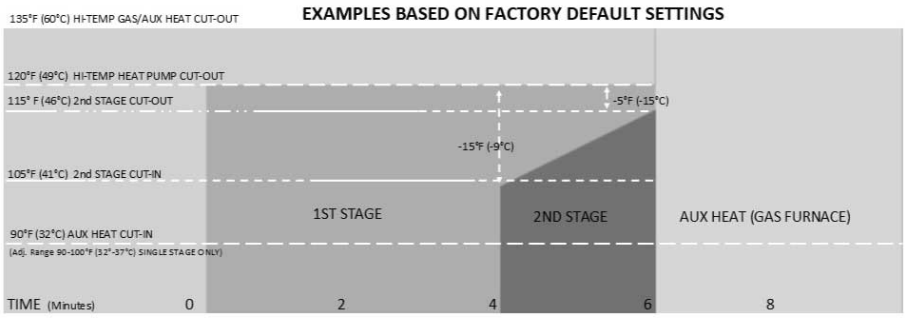

A210210

Fig. 12 – Dual Fuel Heat Pump Example Based on Factory Settings

Dual Fuel Heat Pump (Fig. 12)

Single Stage and 2-Stage Cooling

Single Stage and 2-Stage cooling operates the same on all system types. Refer to (Sequence of Operation on p10).

Single Stage Heating (Dual Fuel Heat Pump)

On any heating call from one of the thermostats (Y if using heat pump thermostats [B with Y if Option #07 is set to B], W if using gas/electric thermostats) the controller will energize the Y1 and G [and B is Option #07 is set to B] outputs to the equipment. A 3-minute minimum run timer will be displayed. After 6 MINUTES of initial run time (Factory default. Adjustable 3-6 minutes, 10, 15 and 20 minutes) if the supply air temperature has not reached 90° F (32° C) (Factory default. Adjustable 90–100°F [32–37°C]) the controller will de-energize the Y1 output to the equipment and energize the W1 output to the equipment (Auxiliary Heat). The equipment will continue to run in AUXILIARY HEAT until the thermostat(s) calling is satisfied. If the supply air temperature rises ABOVE the HIGH TEMP CUTOUT, the controller will turn off W1 to the equipment. The fan will continue to run. After a 3-minute delay, if a call still exists and the supply air temperature has fallen BELOW the high temp cutout, the controller will re-energize W1 to the equipment. ONCE THE CONTROLLER HAS SWITCHED TO AUXILIARY HEAT, THE CONTROLLER WILL STAY IN AUXILIARY HEAT UNTIL ALL CALLS ARE SATISFIED.

Two-Stage Heating (Dual Fuel Heat Pump)

On any heating call from one of the thermostats (Y if using heat pump thermostats [B with Y if Option #07 is set to B], W if using gas/electric thermostats) the controller will energize the Y1 and G [and B is Option #07 is set to B] outputs to the equipment. After 4 minutes of initial run time, if the supply air temperature has not reached 105° (41°C) (15°F [-9°C] degrees below the HIGH TEMP CUTOUT), the controller will energize Y2 to the equipment. Y2 will remain energized until the supply air temperature reaches 115°F (46°C) (5°F [-15°C] below the HIGH TEMP CUTOUT). The controller will then de-energize Y2. The controller will continue to stage Y2 on and off based on the supply air temperature. After 6 MINUTES of initial run time, if the supply air has not reached at least 90°F (32°C), the controller will de-energize Y1 and Y2 and energize W1 to turn on auxiliary heat. W1 will remain energized until the thermostat(s) calling is satisfied. If the supply air temperature rises ABOVE the HIGH TEMP GAS CUTOUT, the controller will turn off W1 to the equipment. The fan will continue to run. After a 3-minute delay, if a call still exists and the supply air temperature has fallen BELOW the high temp cutout, the controller will re-energize W1 to the equipment. ONCE THE CONTROLLER HAS SWITCHED TO AUXILIARY HEAT, THE CONTROLLER WILL STAY IN AUXILIARY HEAT UNTIL ALL CALLS ARE SATISFIED.

NOTE: AUX heat time and temperature staging is not manually adjustable on two-speed heat pump equipment. The second stage and AUX heat staging temperatures move up and down based on the high temp cutout setting.

Controller Features

Exclusive Equipment Test Mode

The controller can be put into an EQUIPMENT TEST MODE by powering the controller. After the IDLE screen appears, hold down the RESET BUTTON, then hold down the SETUP BUTTON, release the RESET BUTTON and then release the SETUP BUTTON. The controller will display TEST - IDLE -EC. The controller will now only accept calls form the ZONE 1 thermostat, and will not operate the dampers. This allows the installer to set the bypass damper, check the refrigerant charge on the system and verify proper airflow thru the system. After all testing is complete, press and release the RESET button. The controller will reset and go into IDLE mode awaiting calls.

Emergency Heat- Heat Pump and Dual Fuel

Emergency heat can ONLY be initiated by a HEAT PUMP THERMOSTAT connected to the ZONE 1 thermostat input. A HEAT PUMP THERMOSTAT SHOULD ALWAYS be used for the ZONE 1 thermostat in heat pump applications. If the ZONE 1 thermostat calls for EMERGENCY HEAT, thE controller will be LOCKED into emergency heat (AUX HEAT). ANY call for heat from either zone will turn on auxiliary heat. The controller can be UNLOCKED by making a call for compressor (heat or cool) from the Zone 1 thermostat.

Auto Changeover

It is possible to have one zone calling for cooling and the other zone calling for heating (opposing calls). When an opposing call occurs, a CHANGEOVER TIMER (10 or 15 minutes - Adjustable) will display on the screen. After the timer has reached zero, the system will go into PURGE MODE for 3-MINUTES. (See PURGE mode below). At the end of the 3-minute purge, the system will switch over to the other mode. If an opposing call still exists, the CHANGOVER TIMER will restart.

Purge

Purge occurs whenever the system is running with only one zone calling, and the other zone makes an opposing call. After the changeover time has elapsed the controller turns off the equipment and leaves the fan (G) energized. The last zone calling will remain open during the 3 MINUTE purge (countdown timer displayed on screen). This allows the temperature in the ductwork to equalize before starting the opposing call.

Minimum Run Time - Compressor

The controller features a MINIMUM RUN TIME anytime Y1 in energized to the equipment. This protects the compressor from damage caused by short-cycling.

Time Delay

The controller features a TIME DELAY MODE that is designed to protect the compressor from short cycling. The time delay is initiated each time the compressor is de-energized. A 3-MINUTE DELAY timer will be displayed on the screen during this time. The compressor CANNOT be restarted until the timer has counted down to zero. In addition, if using a GAS FURNACE and the supply air temperature rises ABOVE the high temp limit, the controller will de-energize W1 and keep G energized. A 3-MINUTE DELAY timer will be displayed on the screen during this time.

Economy Mode

The ECONOMY MODE (EC) input on the ZONE 1 TSTAT connector allows the use of a switch, occupancy sensor or dry contact to apply 24 VAC input to the EC terminal to put the controller into ECONOMY MODE. This prevents ZONE 2 from making equipment calls. ZONE 2 will only be able to open and close the damper. Only ZONE 1 will be able to make equipment calls. Most applications will not use this feature.

RH/RC Jumper

The RH/RC Jumper is factory installed on the TL-EZ4F Controller. If the equipment requires separate transformers for heating and cooling, REMOVE the jumper [JP1] located next to the "C" equipment connector.

NOTE: The jumper should NOT be removed for heat pump systems.

Fresh Air Control - Option #16

The controller features on board Fresh Air Control. A 2-wire or 3-wire damper may be used. The timer is adjustable from 5 to 60 minutes per hour in 5 minute increments. The controller will open the fresh air damper anytime the controller energizes the G terminal to the equipment as long as minutes per hour remain. At the end of the hour, if run time minutes still exist (displayed on screen), the controller will turn on the G terminal to the equipment, open the fresh air damper, leave the zone dampers open and run until the remaining minutes have elapsed.

Exclusive Fresh Air Sensor Mode - Option #17

An outdoor Fresh Air Sensor may be plugged into the controller. By turning on Option #17, a LOW (Option #18) and HIGH (Option #19) temperature limit for fresh air can be set. The low temp setting has a factory default setting of 20° F (-6° C) and an adjustable range of 20–40° F (-6 to - 4° C). The high-temp setting has a factory default setting of 80° F (26° C) and an adjustable range of 60–80° F (15–37° C).

Expansion Mode - Expansion - Option #01

The controller can be used as a 4-zone expansion module for larger systems. Option #01 allows the controller to be set as an expansion module. The zoning system can be expanded up to 2 expansion modules, with a total capacity of 8 zones. Each EXPANSION module requires an individual address (1-2) to be entered at Option #02. Communication is accomplished by use of a SmartLink Cable plugged into the 3-pole Smart Link receptacle at the bottom of each board.

Thermostat Type - Option #06

When using Heat Pump Equipment, the controller allows the use of either Single-Stage Gas/Electric OR Single-Stage Heat Pump thermostats. When electric heat pump or dual fuel system is selected as the System Type (Option #03) the controller will prompt to select what type of thermostat is being used. Calls from gas/electric thermostats are recognized by the controller and the appropriate equipment terminals are energized.

NOTE: A heat pump thermostat with an emergency heat switch is REQUIRED on Zone 1 in order to turn on EMERGENCY HEAT if needed.

Once emergency heat has been initiated, the controller is "LATCHED" into emergency heat. All calls from ALL thermostat will turn on emergency (auxiliary) heat. The controller can only be "UNLATCHED" by making a compressor call (Y in either heating or cooling). After the board is unlatched, the controller reverts to normal heat pump operation.

Fresh Air Mode - Option #14

When the Fresh Air Mode is turned on, the controller will open the Fresh Air and turn on G to the equipment if the outdoor temperature is below the Fresh Air Outdoor Setpoint (Option #15 -55° F (12° C) factory default. Adjustable range 50–75° F (10–24° C). During the cooling call, if the outdoor temperature rises ABOVE the outdoor setpoint, the controller will close the Fresh Air and turn on mechanical cooling.

Dual Fuel Low Temp Lockout - Option #20

When using Dual Fuel Equipment, a Fresh Air Sensor is REQUIRED for proper operation. Option #20 allows the setting of an Outdoor Lock-out Temperature that will prevent the heat pump from running in extremely low temperatures. The factory default setting is 30° F (-1° C). The adjustable range is 20–50° F (-6 to -10° C). When the outdoor temperature is BELOW the Lock-Out Temperature setting, the controller will turn on the gas furnace for all heating calls.

Second Stage Lockout - Option #21

On 2-stage systems, if Option #21 is enabled the controller will not go into second stage with only one zone calling. Both zones MUST be calling for the controller to bring on 2nd stage.

Disable Aux Heat Staging - Heat Pump and Dual Fuel Heat Pump - Option #24

The controller has the ability disable automatic auxiliary heat staging if the outdoor temperature is above 40° F (5° C).

Zone 1 Thermostat Staging - Option #25

On 2-stage systems, a 2-stage thermostat may be installed and used on Zone 1. When Option #25 is turned ON, the Zone 1 thermostat can initiate 2nd stage heating or cooling after an initial 1 minute minimum run time. This setting also overrides 2nd stage lockout (Option #21) for Zone 1.

A2L Dissipation Control Active - Option #29

If an A2L Refrigerant leak is detected a normally closed circuit between EC and 24V will be interrupted by the dissipation control. The ODU will be shut down, all zones driven open and the blower activated per the dissipation protocol.

1) Determine the fresh air CFM to comply with ASHRAE 62.2 using the table below or this formula:

[(Total Sq. Ft) / 100] + [(3 of bedrooms + 1) x 7.5]

FRESH AIR CFM

Floor Area	BEDROOMS				
	0–1	2–3	4–5	6–7	> 7
< 1500	30	45	60	75	90
1501 - 3000	45	60	75	90	105
3001 - 4500	60	75	90	105	120
4501 - 6000	75	90	105	120	135
6001 - 7500	90	105	120	135	150
> 7500	105	120	135	150	165

2) Use an anemometer to measure the CFM provided by the fresh air damper

3) Calculate fresh air run time and set this number at Option #16.

$$\text{FRESH AIR RUN TIME} = 60 \times \frac{\text{Fresh Air CFM}}{\text{Measured CFM}}$$

A210211

Fig. 13 – ASHRAE 62.2

Training

My Learning Center is your central location for professional residential HVAC training resources that help strengthen careers and businesses. We believe in providing high quality learning experiences both online and in the classroom.

Access My Learning Center with your HVACpartners credentials at www.mlctraining.com. Please contact us a mylearning@carrier.com with questions.

© 2024 Carrier. All rights reserved.

Edition Date: 09/24

Catalog No: ZONE4CN-02SI

Replaces: ZONE4CN-01SI

Manufacturer reserves the right to change, at any time, specifications and designs without notice and without obligations.