SIEMENS

Technical Instructions
Document No. 155-320P25
VE VV-1
December 8, 2022

599 Series Zone Valve Bodies:

Two-Way and Three-Way

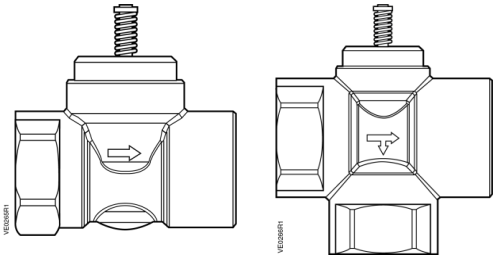

Description	The 599 Series two-way and three-way Zone Valves with a 1/10-inch (2.5 mm) stroke.		
Features	Direct-coupled, universal bonnet		
Application	Control of hot or chilled water for:		
	Zones with radiators		Cooling ceilings (zone valves)
	Floor heating by manifolds		Wall-mounted boilers (zone valves)
	Fan coil units		VAV applications
	Induction units		
Ordering a Valve	To order a valve from the factory, use the product part numbers in Table 2.		
Specifications	Line size		1/2- to 1-inch (15 to 25 mm)
	Capacity		See Table 3, Table 4, and Figure 2
	Body style		Globe
	Seat style		Metal-to-metal
	Action	Two-way: Three-way:	NO/NC determined by actuator Diverting Mixing (limited application)
	Valve body rating		ANSI Class 125 (PN 16)
	Stem travel (Stroke)		1/10-inch (2.5 mm)
Material	Body		Brass
	Body trim		Brass
	Stem		Stainless steel ASTM A582 Type 303
	Packing		Ethylene propylene O-ring
Operating	Controlled medium		Water, glycol solutions to 50%
	Medium temperature range		34°F to 230°F (1°C to 110°C)
	Maximum inlet pressure		232 psig
	Close-off pressure (AB-A)		See Table 1.

Operating, continued	Close-off ratings (AB-A)	According to ANSI/FCI 70-2
	Leakage rate	ANSI Class III (AB-A) w/ SFA/P, SSA ANSI Class IV (AB-A) w/ SSE/SSF
	Flow characteristics	Linear
Miscellaneous	Mounting location	NEMA 1 (interior only)
	Dimensions	See Table 5 and Figures 7 and 8
	Valve weight	See Table 5.

Table 1. 599 Series Zone Valve Body Maximum Close-Off Pressures (PSI).

Line Size Inch (mm)	Cv	SFA	SFP	SSA	SSE/SSF
.50 (15)	1	87	80	94	125
	2.5 and 4	51	44	65	75
.75 (20)	4.1	51	44	65	75
1.00 (25)	7	29	25	36	50

Product Numbers

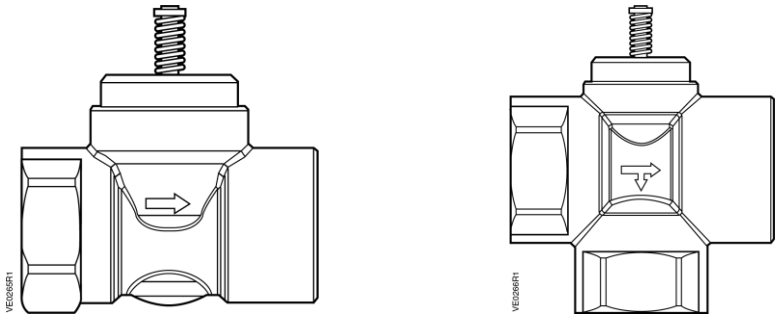

Figure 1. 2-Way and 3-Way Zone Valves.

Table 2. Part Numbers.

Valve	Nominal Line Size		Flow Rate		Connection	
	Inch	Mm	Cv	(Kvs)	NPT	Sweat
2-Way	0.5	15	1.0	(0.85)	599-00210	599-00510
	0.5	15	2.5	(2.15)	599-00211	599-00511
	0.5	15	4.0	(3.4)	599-00214	599-00514
	0.75	20	4.1	(3.5)	599-00212	599-00512
	1.00	25	7.0	(6.0)	599-00213	599-00513
3-Way	0.5	15	1.0	(0.85)	599-00230	599-00530
	0.5	15	2.5	(2.15)	599-00231	599-00531
	0.5	15	4.0	(3.4)	599-00234	599-00534
	0.75	20	4.1	(3.5)	599-00232	599-00532
	1.00	25	7.0	(6.0)	599-00233	599-00533

Table 3. Maximum Water Capacity - U.S. Gallons per Minute.

Valve Size inches	Pressure Differential - psi															
	Cv\1	2	3	4	5	6	8	10	15	20	25	30	40	50	60	75
0.5	1.0	1.4	1.7	2.0	2.2	2.4	2.8	3.2	3.9	4.4	5.0	5.5	6.3	4.1	7.7	8.7
0.5	2.5	3.5	4.3	5.0	5.6	6.1	7.1	7.9	9.7	11.2	12.5	13.7	15.8	17.7	19.4	21.7
0.5/0.75	4.1	5.8	7.1	8.2	9.2	10.0	11.6	13.0	15.9	18.3	20.5	22.5	25.9	29.0	31.8	35.5
1.00	7.0	9.9	12.1	14.0	15.7	17.1	19.8	22.1	27.1	31.3	35.0	38.3	44.3	49.5	54.2	60.6

Table 4. Maximum Water Capacity - Cubic Meters per Hour (m^3/hr).

Valve Size mm	Pressure Differential - kPa													
	1	10	20	30	40	50	60	80	Kvs/100	150	200	300	400	500
15	0.9	0.27	0.38	0.47	0.54	0.60	0.66	0.76	0.85	1.04	1.20	1.47	1.70	1.90
15	0.21	0.68	0.96	1.17	1.35	1.51	1.66	1.91	2.15	2.60	3.00	3.70	4.30	4.80
15/20	0.35	1.12	1.59	1.94	2.24	2.51	2.75	3.17	3.50	4.34	5.01	6.14	7.09	7.93
25	0.60	1.91	2.71	3.32	3.83	4.28	4.69	5.41	6.00	7.41	8.56	10.48	12.11	13.54

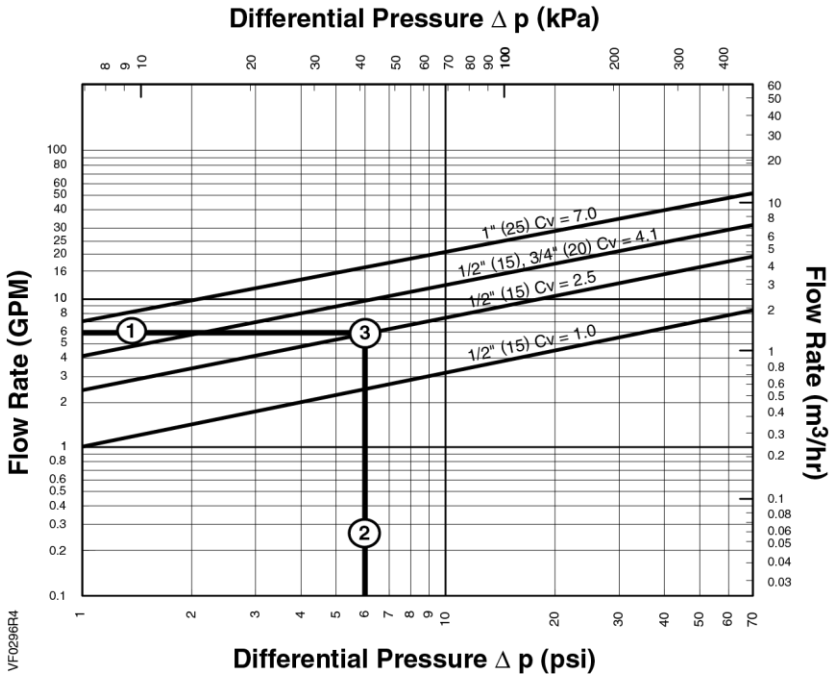

Figure 2. Water Capacity Graph.

Selection Example

See Figure 2.

Select a valve given:

① Required flow = 6 gpm

② Desired pressure drop = 6 psi

③ Choose a 1/2-inch (15-mm) valve, Cv 2.5

Operation

2-Way

Figure 3 shows the zone valve in the open or full flow position. The valve spring provides the necessary force to hold the stem in the raised or NO position.

In the event of power failure, the actuator returns to its normal position; the actuator determines whether the valve will fail open or closed. See the actuator Technical Instructions for additional information.

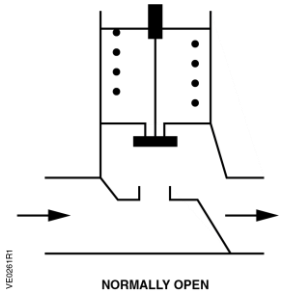

Figure 3.

3-Way

Diverting

As the valve stem moves downward, the flow through the NO port (AB-A) decreases and the flow through the NC port (AB-B) increases. As the valve stem moves upward, the flow through the NO port (AB-A) increases and the flow through the NC (AB-B) port decreases.

In the event of power failure, the actuator returns the valve to its normal position; the actuator determines whether the valve fails with flow to port A or port B. See the actuator Technical Instructions for additional information.

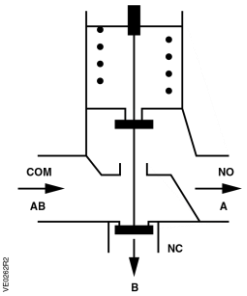

Figure 4.

Mixing

The 3-way zone valves are diverting valves. However, they may be used as mixing valves under the conditions shown in Figures 5 and 6.

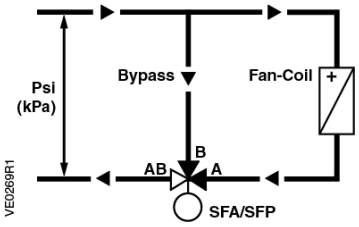

Figure 5. Mounting in the Return Flow.

Operation, Continued

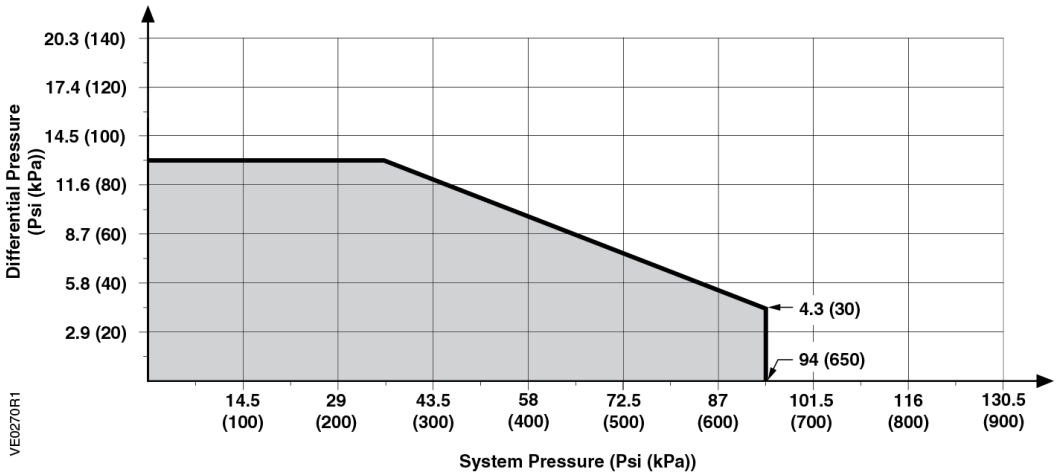

Figure 6. Allowable Differential Pressure in Relation to the System Pressure.

Sizing

The sizing of a valve is important for correct system operation. An undersized valve will not have sufficient capacity at maximum load. An oversized valve can initiate cycling and can damage the seat and throttling plug because of the restricted opening. Correct sizing of the control valve for actual expected conditions is considered essential for good control.

The following variables must be determined:

- The medium to be controlled: hot or chilled water.
- The maximum inlet temperature and pressure of the medium at the valve.
- The pressure differential that will exist across the valve under maximum load demand.
- The maximum capacity the valve must deliver.
- The maximum line pressure differential the valve actuator must close against.

See *Control Valve Selection and Sizing Application Bulletin* (140-0038) for further recommendations.

See Table 3 and Table 4 for valve capacities.

Mounting and Installation

Install the valve so that the flow follows the direction of the arrow indicated on the valve body.

For best performance, install the valve assembly with the actuator above the valve body. The valve and actuator can be installed in any position between vertical and horizontal.

NOTE: It is not recommended to install the valve assembly so that the actuator is below horizontal or upside down.

Allow sufficient space for servicing the valve and actuator. See Table 5 for valve body dimensions.

NOTE: Instructions for field mounting an actuator, wiring diagrams, and start-up are covered in the Technical Instructions for each actuator.

Service Kit

599-00599 AL50 - Zone Valve Support Rings – 10 pack

Dimensions

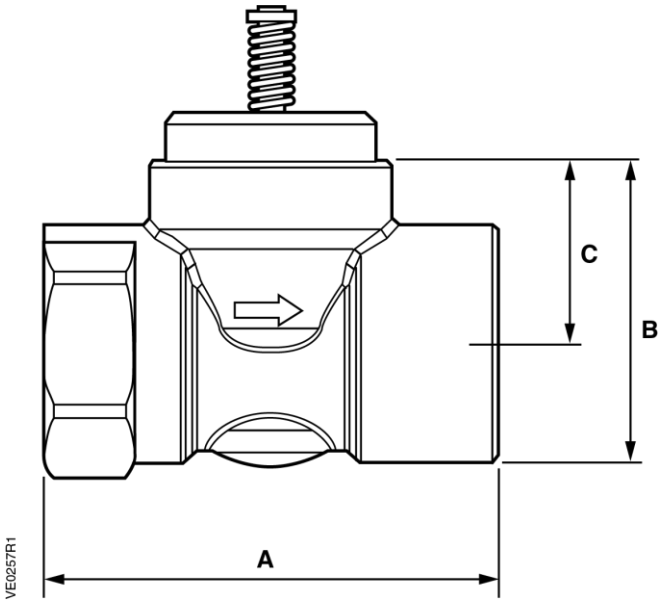

Figure 7. 2-Way Valve Body.

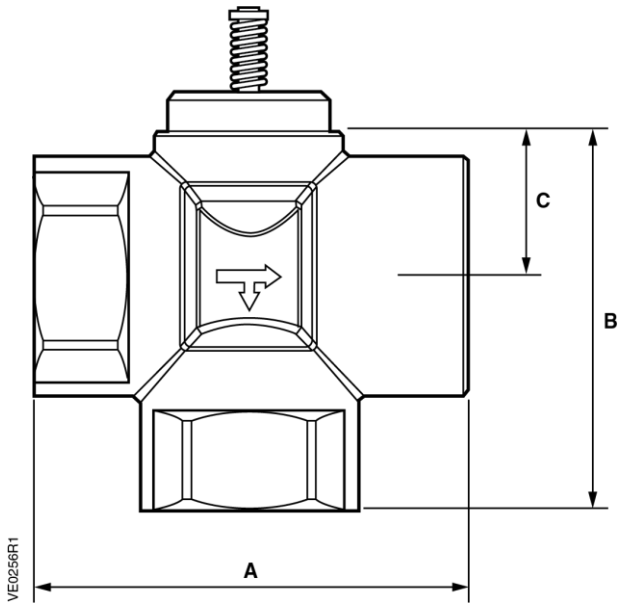

Figure 8. 3-Way Valve Body.

Table 5. Valve Dimensions.

Connection Type	Valve Size Inch (mm)	2-Way Valve				3-Way Valve			
		A	B	C	Weight lb (kg)	A	B	C	Weight lb (kg)
NPT	0.5 (15)	2.76 (70)	1.56 (39,5)	0.96 (24,5)	0.73 (0,33)	2.76 (70)	2.34 (59,5)	0.96 (24,5)	0.90 (0,40)
	0.75 (20)	2.76 (70)	1.67 (42,5)		0.84 (0,38)	2.76 (70)	2.34 (59,5)		1.07 (0,49)
	1.0 (25)	3.50 (89)	1.83 (46,5)		1.46 (0,66)	3.50 (89)	2.64 (67)		1.80 (0,81)
Sweat	0.5 (15)	2.60 (66)	1.50 (38)	0.96 (24,5)	0.60 (0,27)	2.60 (66)	2.26 (57,5)	0.96 (24,5)	0.71 (0,32)
	0.75 (20)	2.76 (70)	1.63 (41,5)		0.71 (0,32)	2.76 (70)	2.34 (59,5)		0.86 (0,39)
	1.0 (25)	3.50 (89)	1.77 (45)		1.12 (0,51)	3.50 (89)	2.65 (67)		1.31 (0,60)

Information in this publication is based on current specifications. The company reserves the right to make changes in specifications and models as design improvements are introduced. Product or company names mentioned herein may be the trademarks of their respective owners.
© 2019-2022 Siemens Industry, Inc.