Revolv

Indoor Comfort Products from the Manufactured Home Experts

E7 100% AFUE MH Electric Furnaces

R-454B READY



UNIQUE MANUFACTURED HOUSING DESIGN

With a robust, 20"W, fully-insulated cabinet to fit the classic MH footprint for replacement opportunities, The E7EM is the most versatile, future-friendly, HUD-compliant, MH electric furnace available.

4-TON AC-READY ECM BLOWER

16 dip-switch speed-settings and factory or field-installed 31 ½"H coil box to support increasing coil sizes needed to meet increasing DOE minimum-efficiencies. (High-static blower kit #1044062 also available).

MODERN CONTROLS

Quiet heater relays and an integrated control board, eliminating the need for an additional time-delay relay for split systems.

NEW & REPLACEMENT APPLICATION ACCESSORIES

Save the hassle of sourcing materials, field-fabrication, and repeat supply-house trips and depend on Warranty and Support handled directly by Style Crest's dedicated HVAC Team, offering the most competitive warranty coverage and service in the Manufactured Housing Industry.

ACCESSORIES ALSO AVAILABLE



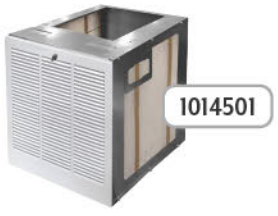

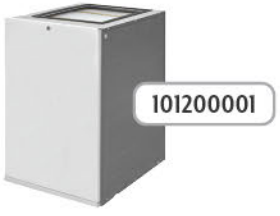



E7 100% AFUE MH Electric Furnaces **R-454B READY**

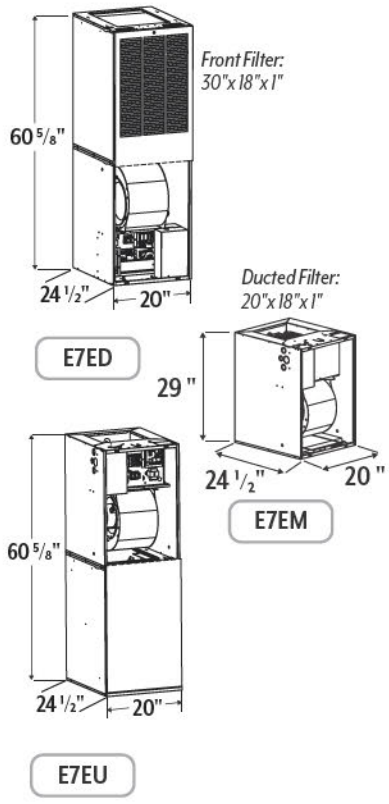

ELECTRIC FURNACE MODELS

Item #	Model	Airflow	Coil Box	Ship Wt.	Ship Dimensions
101100028	E7ED-B010K1	Downflow	31 ½"H	112 lbs	26 ½"D x 21"W x 62"H
101100029	E7ED-B012K1	Downflow	31 ½"H	112 lbs	26 ½"D x 21"W x 62"H
101100030	E7ED-B015K1	Downflow	31 ½"H	112 lbs	26 ½"D x 21"W x 62"H
101100031	E7ED-B017K1	Downflow	31 ½"H	112 lbs	26 ½"D x 21"W x 62"H
101100032	E7ED-B020K1	Downflow	31 ½"H	112 lbs	26 ½"D x 21"W x 62"H
101100033	E7ED-B023K1	Downflow	31 ½"H	112 lbs	26 ½"D x 21"W x 62"H
101100034	E7EM-B010K1	Up/Downflow	None [1]	75 lbs	26 ½"D x 21"W x 30"H
101100035	E7EM-B012K1	Up/Downflow	None [1]	75 lbs	26 ½"D x 21"W x 30"H
101100036	E7EM-B015K1	Up/Downflow	None [1]	75 lbs	26 ½"D x 21"W x 30"H
101100037	E7EM-B017K1	Up/Downflow	None [1]	75 lbs	26 ½"D x 21"W x 30"H
101100038	E7EM-B020K1	Up/Downflow	None [1]	75 lbs	26 ½"D x 21"W x 30"H
101100039	E7EM-B023K1	Up/Downflow	None [1]	75 lbs	26 ½"D x 21"W x 30"H
101100040	E7EU-B010K1	Upflow	31 ½"H	112 lbs	26 ½"D x 21"W x 62"H
101100041	E7EU-B012K1	Upflow	31 ½"H	112 lbs	26 ½"D x 21"W x 62"H
101100042	E7EU-B015K1	Upflow	31 ½"H	112 lbs	26 ½"D x 21"W x 62"H
101100043	E7EU-B017K1	Upflow	31 ½"H	112 lbs	26 ½"D x 21"W x 62"H
101100044	E7EU-B020K1	Upflow	31 ½"H	112 lbs	26 ½"D x 21"W x 62"H
101100045	E7EU-B023K1	Upflow	31 ½"H	112 lbs	26 ½"D x 21"W x 62"H

1) If adding a central air split system, you should also order a separate field-installed coil box, listed in the Application Accessories table below.

ELECTRICAL SPECIFICATIONS [3]

Model	Heat Element Output @230v	Supply Circuit	Total Current	MCA	MOP
E7*B010K1	9.2 kW 31 MBH	Single	43.7 A	54.7 A	60 A
E7*B012K1	10.7 kW 36 MBH	Single	50.1 A	62.6 A	70 A
		Dual-A	27.0 A	33.7 A	35 A
		Dual-B	23.2 A	28.9 A	30 A
E7*B015K1	13.8 kW 47 MBH	Single	63.7 A	79.6 A	80 A
		Dual-A	43.7 A	54.7 A	60 A
		Dual-B	20.0 A	25.0 A	25 A
E7*B017K1	14.9 kW 51 MBH	Single	68.5 A	85.6 A	90 A
		Dual-A	43.1 A	53.9 A	60 A
		Dual-B	25.4 A	31.7 A	35 A
E7*B020K1	18.4 kW 63 MBH	Single	83.7 A	104.6 A	110 A
		Dual-A	43.7 A	54.7 A	60 A
		Dual-B	39.9 A	49.9 A	50 A
E7*B023K1	19.8 kW 68 MBH	Single	90.1 A	112.6 A	125 A
		Dual-A	43.7 A	54.7 A	60 A
		Dual-B	46.3 A	57.9 A	60 A

APPLICATION ACCESSORIES

Item #	Description
1044062	E7, High-Static Blower Kit, ECM, 4THP&5T+ [2]
101200000	E7EM, Coil Box, 31 ½"H, DF, Louvered Door
101200001	E7EM, Coil Box, 31 ½"H, Upflow, Solid Door
903891	E7EM, Rpl. Coil Box, Alcove, 27"H, Front Return
902989	E7EM, Grille+Frame Assy, 27"H, Alcove/903891
1014501	E7EU/M, Upflow Stand w/ Filters & Door
902990	E7EU/M, Upflow Supply Duct Connector
901987A	Duct Connector, 11 ¼" x 13 ½" x ⅞"H, EA *(12/Ctn)*
901988A	Duct Connector, 11 ¼" x 13 ½" x 2"H, EA *(12/Ctn)*
901989A	Duct Connector, 11 ¼" x 13 ½" x 4 ¼"H, EA *(6/Ctn)*
901990A	Duct Connector, 11 ¼" x 13 ½" x 6 ¼"H, EA *(6/Ctn)*
901991A	Duct Connector, 11 ¼" x 13 ½" x 8 ¼"H, EA *(4/Ctn)*
901992A	Duct Connector, 11 ¼" x 13 ½" x 10 ¼"H, EA *(3/Ctn)*
901993A	Duct Connector, 11 ¼" x 13 ½" x 12 ¼"H, EA *(3/Ctn)*
921767	E7 Test Tool, Digimotor-ECM, Broad Ocean [3]

2) Item is AHRI-required for a Revolv 4-Ton Heat Pump Split System.
3) See Technical Specifications for 208V values.