MicroMetl	DATE: 3/2024	WEIGHT (LBS): 41.96	DESCRIPTION: CARRIER MRT BAROMETRIC INTAKE HOOD, 25%	PART NUMBER: OAM-MRT69SA
SUBMITTED TO: N/A	COMPANY: MICROMETL		JOB NAME: N/A	APPROVED BY: DATE:

FOR MODEL NUMBER: 551J 28 Horizontal, 551J 28 Vertical, 558J 28 Horizontal, 558J 29 Horizontal, 558J 30 Vertical, 580J 29 Horizontal, 580J 30 Vertical, 581J 28 Horizontal, 581J 30 Vertical, 48HC 28 EnergyX, 48HC 28 Horizontal, 48HC 28 Vertical, 48LC 24 Horizontal, 48LC 24 Vertical, 48LC 26 Horizontal, 48LC 26 Vertical, 48TC 29 Horizontal, 48TC 30 Vertical, 50HC 28 EnergyX, 50HC 28 Horizontal, 50HC 28 Vertical, 50LC 24 Horizontal, 50LC 24 Vertical, 50LC 26 Horizontal, 50LC 26 Vertical, 50TC 29 Horizontal, 50TC 30 Vertical, RAH 300 Vertical, RAH 303 Horizontal, RAS 333 Horizontal, RAS 336 Vertical, RGH 300 Vertical, RGH 303 Horizontal, RGS 336 Vertical, 48FC 30, 50FC 30, 559K 30, 582K 30, RGV 336,RAV 336

DETAILS: Model Details

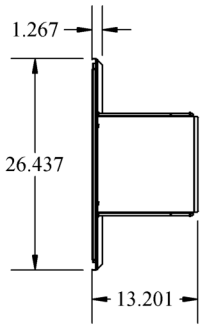

FEATURES

- **18GA PAINTED CONSTRUCTION**
- **PANELS INSULATED**
- **GASKETING PROVIDED**
- **25% O/A BAROMETRIC INTAKE**
- **1,500 CFM @ 569 FPM**

****HORIZONTAL APPLICATION****

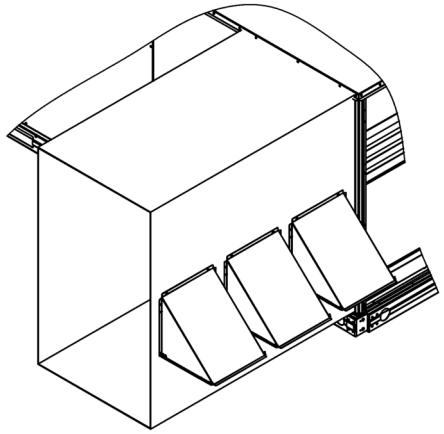

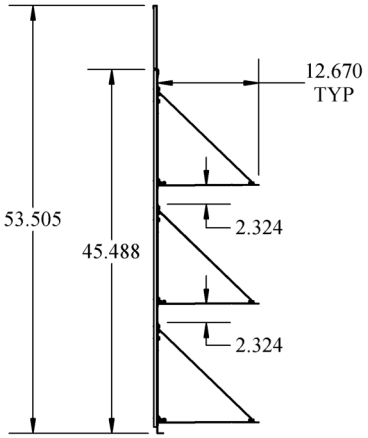

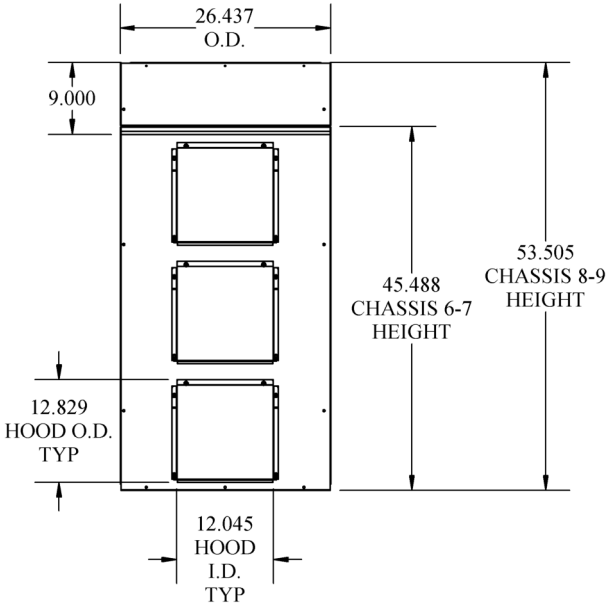

****VERTICAL APPLICATION****

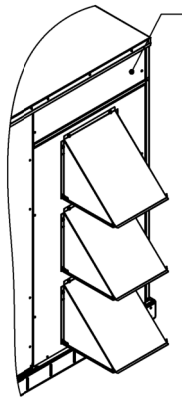

****CHASSIS 8-9****

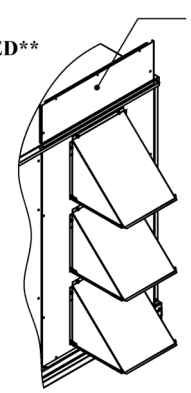

****CHASSIS 6-7****

NOTES: SPECIAL NOTES

Openings and dimensions may vary from contract. An order constitutes acceptance of these variances.

THIS DOCUMENT IS THE PROPERTY OF MICROMETL CORPORATION AND IS DELIVERED UPON THE EXPRESS CONDITION THAT THE CONTENTS WILL NOT BE DISCLOSED OR USED WITHOUT MICROMETL'S WRITTEN CONSENT.
MANUFACTURER RESERVES THE RIGHT TO DISCONTINUE, OR CHANGE AT ANYTIME, SPECIFICATIONS & DESIGNS WITHOUT ANY NOTICE AND WITHOUT INCURING OBLIGATIONS. COPYRIGHT MICROMETL CORPORATION 2017. ALL RIGHTS RESERVED