CANFAB
CANNON FABRICATION INC
182 GRANITE STREET, SUITE 101, CORONA, CA 92879
PHONE: (951)278-1830 FAX: (951)278-8444 www.canfab.com canfab@canfab.com

CARRIER 3 - 6-1/2 TONS
48/50HC 04-06, 50HCQ 04-06, 50KCQ 04-06,
48/50LC 04-06, 48/50TC 04-07, 50TCQ 04-07
48/50KC 04-06

PART NO: SEE BELOW

100% BAROMETRIC RELIEF DOWN DISCHARGE ECONOMIZER

REPLACES CFI065ARI00

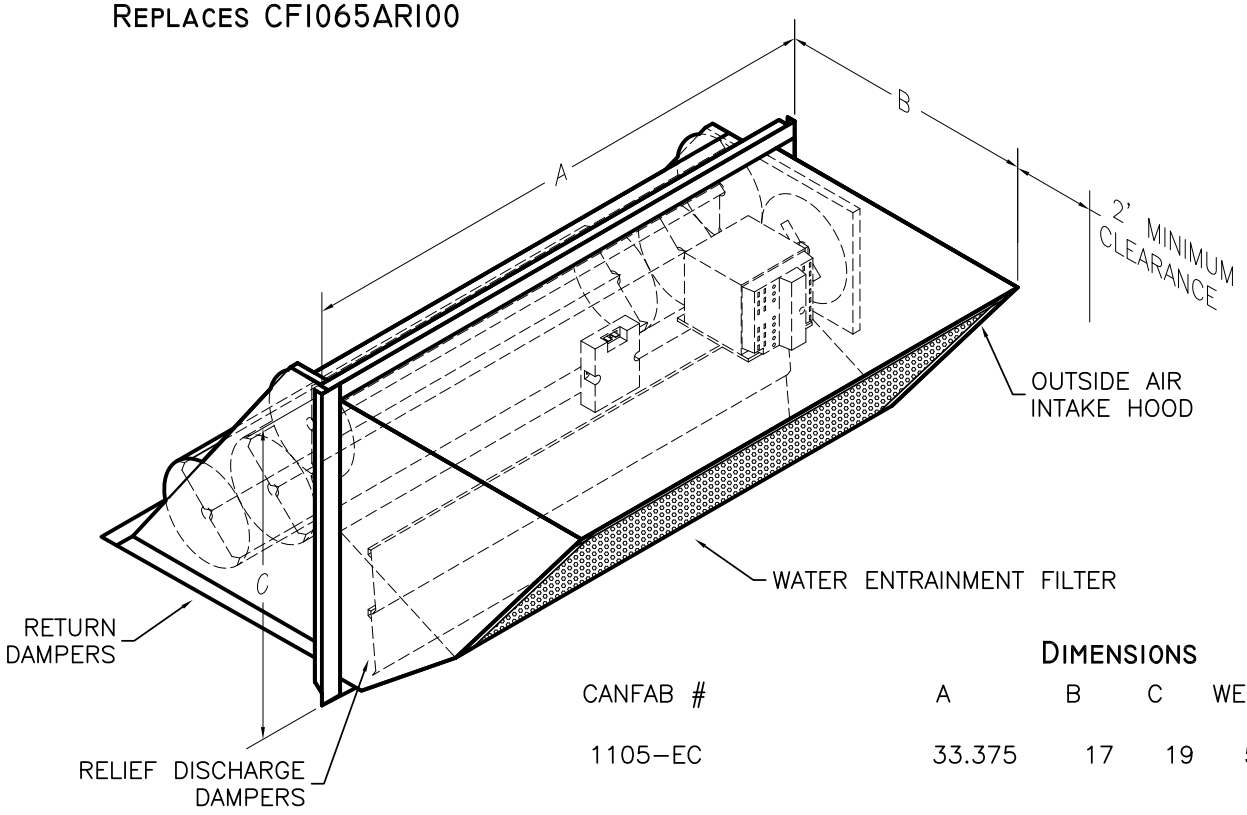

DIMENSIONS

CANFAB #	A	B	C	WEIGHT
1105-EC	33.375	17	19	59 LBS.

SELECT PRODUCT

DIMENSIONS

CANFAB#	A	B	C	WEIGHT
1105-EC	33.375	17	19	59 LBS.

FEATURES

- HEAVY GAUGE GALVANIZED STEEL CONSTRUCTION.
- AMERICAN STERLING GREY PAINT FINISH.
- ONE PIECE ASSEMBLY.
- GEAR DRIVEN DAMPERS.
- HONEYWELL MODULATING DRYBULB CONTROL SYSTEM FULLY INTEGRATED. OPTIONS: ENTHALPY "-HE"; COMPARATIVE (DIFFERENTIAL) ENTHALPY "-HC", ADD "-HE" OR "-HC" TO THE END OF PART NUMBER.
- OPTIONAL BELIMO LF24SR-US ACTUATOR AVAILABLE, ADD "BN" TO THE END OF THE PART NUMBER (BELIMO ACTUATOR ONLY, NO OTHER CONTROLS PROVIDED).
- USES HVAC UNITS FILTER ACCESS DOOR.
- CAPABLE OF RELIEVING UP TO 100% OF THE OUTSIDE AIR INTAKE.

1105-EC

CFM	SP IN WG
2600	.40
2400	.36
2200	.32
2000	.31
1800	.30
1600	.22
1400	.16
1200	.10
900	.07

DOC: 01

PROJECT: DATE:

ENGINEER: DISTRIBUTOR:

DRAWING NUMBER: