# 1105-EC, 1107-EC & 1177-EC Installation Instructions

1 – REMOVE RETURN AIR COMPARTMENT FILTER ACCESS PANEL AND LOWER ECONOMIZER PANEL ON HVAC UNIT, SAVE THE SCREWS AND THE FILTER ACCESS PANEL AND DISGARD THE ECONOMIZER PANEL.
2 – WHEN USING STANDARD HONEYWELL ECONOMIZER CONTROLS, REMOVE THE ECONOMIZER JUMPER PLUG FROM THE ECONOMIZER WIRE HARNESS LOCATED IN THE RETURN AIR COMPARTMENT OF THE HVAC UNIT. DO NOT DISCARD JUMPER, WIRE TIE TO WIRE HARNESS FOR FUTURE USE.
3 – WHEN USING THE BELIMO ACTUATOR OPTION, CONSULT CONTROLS CONTRACTOR REGARDING THE ECONOMIZER WIRING.
4 – SLIDE THE ECONOMIZER UP TO THE HVAC UNIT AND TILT THE TOP OF THE ECONOMIZER TOWARD THE HVAC UNIT AND SLIDE INTO THE COMPARTMENT AS SHOWN IN FIG.1.
5 – AT THE BACK OF THE BOTTOM RETURN OPENING UNDER THE FILTER RACK ON THE HVAC UNIT, YOU WILL SEE THREE TABS. THE FRONT FLANGE OF THE ECONOMIZER MUST SLIDE UNDER THESE TABS.
6 – ONCE THE FRONT FLANGE IS UNDER THE TABS, LEVEL THE ECONOMIZER OUT UNTIL IT SITS DOWN INTO THE SLOT ON BACK OF THE ECONOMIZER AND DOWN ONTO THE BASE RAIL OF THE HVAC UNIT.
7 – BE SURE THE SIDE FLANGES OF THE POWER EXHAUST CABINET ARE SITTING IN THE SLOTS OF THE HVAC UNITS CORNER POSTS.
8 – FASTEN THE ECONOMIZER TO THE HVAC UNIT THROUGH THE HOLES PROVIDED USING THE SCREWS REMOVED FROM THE ECONOMIZER PANEL IN STEP–1.
9 – AT THE FILTER ACCESS DOOR OPENING, REACH IN AND PLUG THE ECONOMIZER HARNESS INTO THE HVAC UNITS ECONOMIZER HARNESS.
10 – REMOVE THE DISCHARGE AIR SENSOR FROM IT'S SHIPPING LOCATION AND TAKE IT TO THE HVAC UNITS SUPPLY FAN COMPARTMENT. NEXT TO THE FAN INLET YOU WILL SEE A PINK AND VIOLET WIRE, USING THE WIRE NUTS PROVIDED, CONNECT THE WHITE WIRES FROM THE DISCHARGE AIR SENSOR TO THE PINK AND VIOLET WIRES.
11 – FASTEN THE DISCHARGE AIR SENSOR NEXT TO THE INLET OF THE SUPPLY FAN.
12 – SLIDE THE FILTER ACCESS DOOR BACK INTO PLACE ABOVE THE ECONOMIZER.

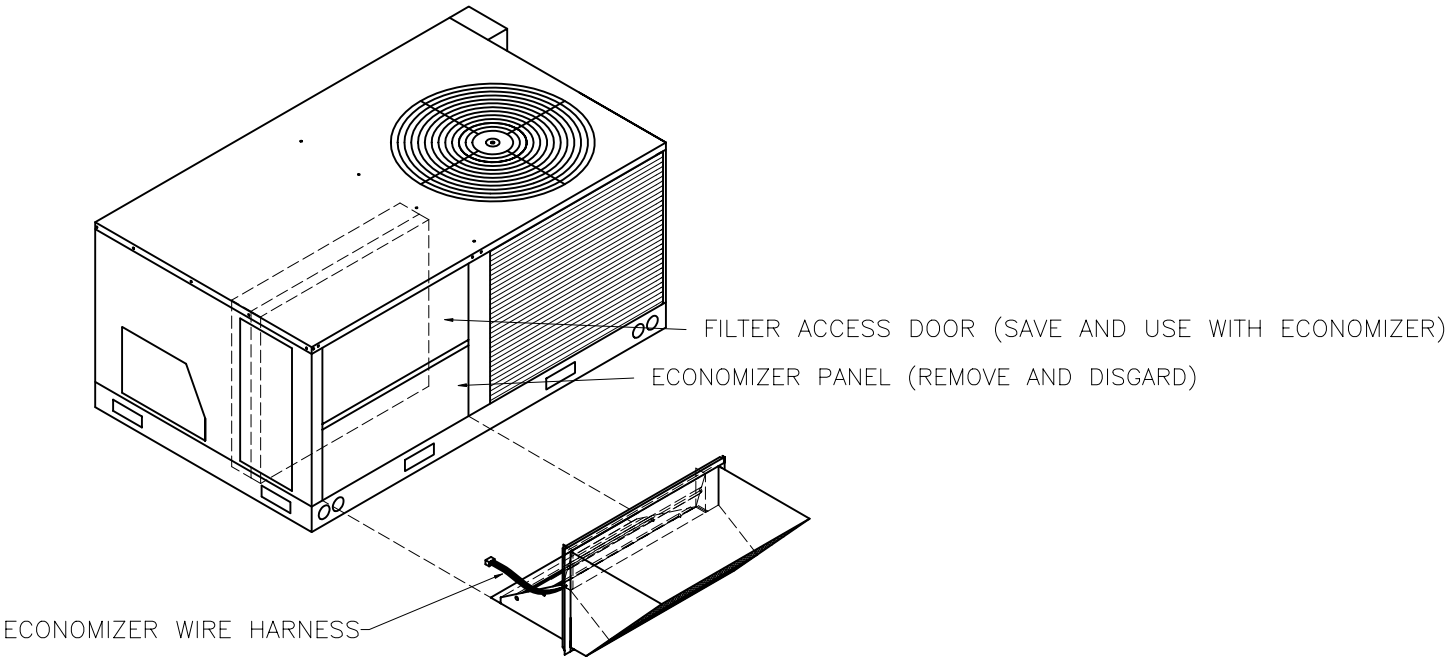


**Fig.1**

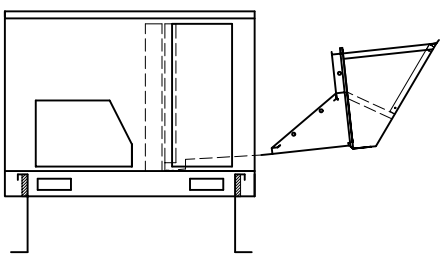

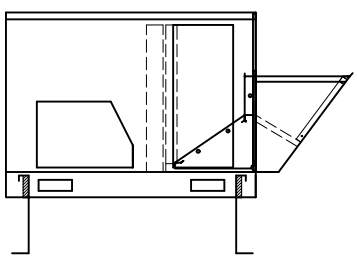

# JADE Modulating Economizer Controls
## Carrier Gas Electric, Cooling Only & Heat Pump Units

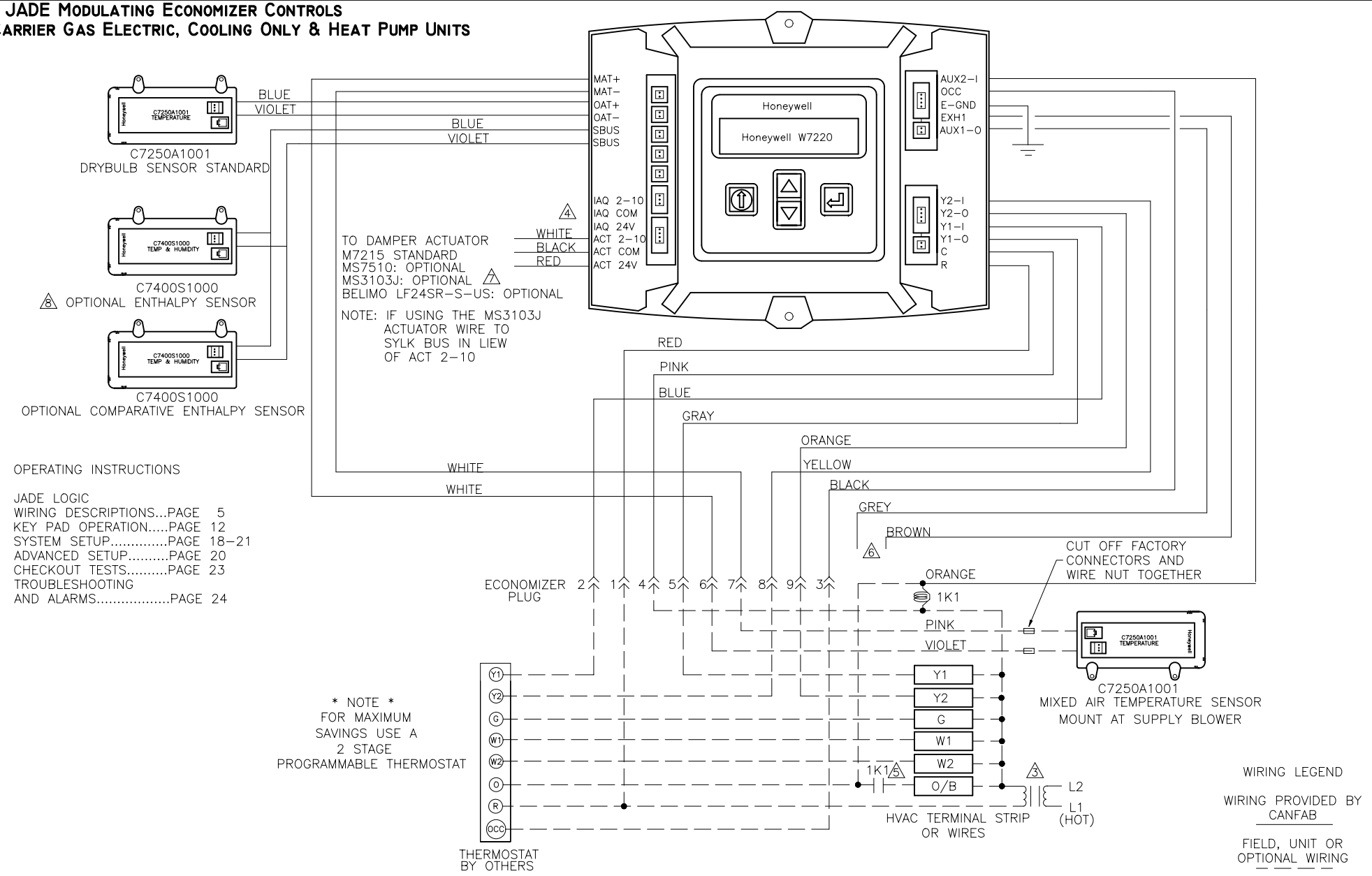


OPERATING INSTRUCTIONS


JADE LOGIC
WIRING DESCRIPTIONS...PAGE 5
KEY PAD OPERATION.....PAGE 12
SYSTEM SETUP.....PAGE 18–21
ADVANCED SETUP.....PAGE 20
CHECKOUT TESTS.....PAGE 23
TROUBLESHOOTING AND ALARMS.....PAGE 24


WIRING LEGEND

WIRING PROVIDED BY CANFAB

FIELD, UNIT OR OPTIONAL WIRING


CanFab
CANNON FABRICATION INC
182 GRANITE STREET, SUITE 101, CORONA, CA 92879
PHONE: (951)278–1830 FAX: (951)278–8444 www.canfab.com canfab@canfab.com


| | | | |
|---|---|---|---|
| FOR: Carrier 3 Thru 27.5 Ton Commercial Units JADE Economizer Controls | | | |
| PART NO: | | PROJECT: | |
| ENGINEER: | | DISTRIBUTOR: | |
| DRAWING NO: 12100co | SW | 3.04.13 | DATE: |
| APPROVED BY: | | | DATE: / / |

CANNON FABRICATION INC
182 GRANITE STREET, SUITE 101, CORONA, CA 92879
PHONE: (951)278-1830 FAX: (951)278-8444 www.canfab.com canfab@canfab.com

FOR: JADE ECONOMIZERS

PART NO:

# MODULATING ECONOMIZER CONTROLS GAS ELECTRICS, COOLING ONLY AND HEAT PUMP UNITS
## PAGE 2

1. POWER SUPPLY. PROVIDE DISCONNECT MEANS AND OVERLOAD PROTECTION AS REQUIRED.
2. MOTOR SPRING-RETURNS CLOSED WHEN UNIT IS NOT RUNNING.
3. ENSURE THAT EQUIPMENT TRANSFORMER IS SIZED TO HANDLE THE EXTRA LOAD OF THE ECONOMIZER AND ACTUATOR.
4. OPTIONAL DEMAND CONTROL VENTILATION (DCV) CO2 SENSOR WITH 2-10VDC OUTPUT. WIRE HARNESS EXTENSION PROVEDED WITH THE CO2 SENSOR.
5. WHEN USING A HEATPUMP WITH DEFROST FEEDBACK, ADD AN ISOLATION RELAY BETWEEN O AND C. (FIELD PROVIDED AND INSTALLED).
6. 24 VAC OUTPUT WHEN PROGRAMMED CAP OFF IF NOT USED (SEE PAGE 6 FOR ACTUATOR WIRING OPTIONS). NOTE: ON/OFF ACTUATORS CAN BE USED ON THE EXH1 OR AUX1-O TERMINALS WITH GROUND TO THE C TERMINAL. WHEN PROGRAMMING THE EXH1 OR AUX1-O, THE % IS THE PERCENT OPEN POSITION OF THE OUTDOOR AIR DAMPER WHEN THE EXH1 OR AUX1-O TERMINAL IS ENERGIZED AND THE 2-POS DAMPER OPENS 100%. IF USING THE AUX1-O TERMINAL PROGRAM AUX1-O FOR EXH2.
7. OPTIONAL MS3103J COMMUNICATING ACTUATOR AVAILABLE (SPECIAL ORDER CONTACT FACTORY).
8. WHEN USING THE SYLKBUS SENSORS THERE WILL BE A SLIGHT DELAY WHILE THE JADE CONTROLLER AND THE SENSOR/S COMMUNICATE. ANALOG SENSORS DO NOT COMMUNICATE ON THE SYLKBUS AND OUTPUT A 20k OHM SIGNAL TO THE JADE CONTROLLER SO THE RESPONSE TIME IS INSTANTANEOUS.

   NOTE: JADE WILL BE IN "SET UP" MODE FOR THE FIRST 60 MINUTES AFTER POWER UP. IF A SENSENSOR FOR THE OA OR SYLKBUS DEVICE (SENSOR, ACTUATOR) IS DISCONNECTED DURING THE SET UP MODE, THE JADE WILL NOT ALARM THE FAILURE. THE MA SENSOR IS A SYSTEM "CRITICAL" SENSOR, IF THE MA SENSOR IS REMOVED DURING THE SET UP MODE, THE JADE WILL ALARM. AFTER 60 MINUTES THE JADE CONTROLLER WILL CHANGE TO OPERATION MODE AND ALL COMPONENTS REMOVED OR FAILED WILL ALARM.

PROJECT: DATE:

ENGINEER: DISTRIBUTOR:

DRAWING NUMBER: 12100CO.DWG SW 3.04.13