Electric Heater Accessory
Single Package Rooftop Units
Select 15 to 27.5 Tons

Installation Instructions

Part No. CRHEATER454A00-CRHEATER471A00

IMPORTANT: Read these instructions completely before attempting to install the accessory electric heater.

CONTENTS

Page

MODEL USAGE 1
SAFETY CONSIDERATIONS 1
GENERAL 1
INSTALLATION 11
Heater Installation (All Units) 11
460V HIGH SCCR UNIT INSTALLATION (65KA SCCR) 14
230V HIGH SCCR UNIT INSTALLATION (60KA SCCR) 14
TYPICAL WIRING DIAGRAMS 14
START-UP 14

MODEL USAGE

ELECTRIC HEATER P/N	MODEL	SIZE
CRHEATER454A00-CRHEATER471A00	50FC	20-30
	559K	20-30
	RAV	210-336
	50FCQ	17-28
	547K	17-28
	RHV	181-300

SAFETY CONSIDERATIONS

Installation and servicing of air-conditioning equipment can be hazardous due to system pressure and electrical components. Only trained and qualified service personnel should install, repair, or service air-conditioning equipment.

Untrained personnel can perform basic maintenance functions of cleaning coils and filters and replacing filters. All other operations should be performed by trained service personnel. When working on air-conditioning equipment, observe precautions in the literature, tags and labels attached to the unit, and other safety precautions that may apply.

Follow all safety codes, including ANSI (American National Standards Institute) Z223.1. Wear safety glasses and work gloves. Use quenching cloth for unbrazing operations. Have fire extinguisher available for all brazing operations.

It is important to recognize safety information. This is the safety-alert symbol ⚠. When you see this symbol on the unit and in instructions or manuals, be alert to the potential for personal injury.

Understand the signal words DANGER, WARNING, CAUTION, and NOTE. These words are used with the safety-alert symbol. DANGER identifies the most serious hazards which **will** result in severe personal injury or death. WARNING signifies hazards which **could** result in personal injury or death. CAUTION is used to identify unsafe practices, which **may** result in minor personal injury or product and property damage. NOTE is used to highlight suggestions which **will** result in enhanced installation, reliability, or operation.

⚠ WARNING

ELECTRICAL SHOCK HAZARD

Failure to follow this warning could result in personal injury and/or death.

Before beginning any modification, disconnect power supply and install lockout tag before attempting to install the accessory. All wiring must comply with applicable national and local codes.

⚠ WARNING

PERSONAL INJURY AND EQUIPMENT DAMAGE HAZARD

Failure to follow this warning could result in personal injury and/or death and damage to equipment.

Field modification of electric heat staging may result in the overriding of electric heat safety switches and is prohibited.

⚠ WARNING

ELECTRICAL SHOCK HAZARD

Failure to follow this warning could result in personal injury or death.

Before installation or servicing system, always turn off main power to system and install lockout tag. Unit may have more than one disconnect switch. Turn off the accessory heater power switch, if applicable.

GENERAL

This installation instruction covers the following accessory heaters:

- CRHEATER454A00-CRHEATER471A00

NOTE: Heaters may be installed on both Standard (5kA) SCCR and High (60-65kA) SCCR rated units.

Each kit contains the heater module, wire ties, and three 1/4-20 nuts. See Tables 2-10 for unit electrical data and kit usage.

NOTE: All vertical supply units with electric heat require a field-supplied 90-degree elbow. The elbow must be installed in the supply ductwork below the unit discharged connection.

NOTE: Refer to Tables 1-10 for the correct single point kit to use when single point power entry is desired. The single point kit required varies with the specific heater accessory used.

NOTE: For units equipped with a non fused disconnect switch, the disconnect must be adequately sized for the electric heater. If the disconnect switch supplied with the equipment is not sized to handle the ampacity of the electric heater accessory kit for cooling units or the electric heater accessory kit plus the unit ampacity for heat pump units, the electric heater kit must be wired to a separate disconnect switch sized to handle the electric heater accessory kit ampacity. Refer to the unit's nameplate or the product data for the unit.

Table 1 — 15 Ton Capacity Models - Vertical Duct Configuration

MODEL	IFM TYPE	NOMINAL V-Ph-Hz	ELECTRIC HEATER P/N	NOMINAL kW	STAGES	SCCR RATING[a]	SINGLE POINT KIT
50FCQ/547K/RHV	STD/MED	208/230-3-60	CRHEATER454A00	25.0	2	Standard	CRSINGLE056A00
						High	CRSINGLE058A00
			CRHEATER455A00	50.0	2	Standard	CRSINGLE056A00
						High	CRSINGLE058A00
			CRHEATER456A00	75.0	2	Standard	CRSINGLE056A00
						High	CRSINGLE058A00
		460-3-60	CRHEATER457A00	25.0	2	Standard	CRSINGLE057A00
						High	CRSINGLE059A00
			CRHEATER458A00	50.0	2	Standard	CRSINGLE057A00
						High	CRSINGLE059A00
			CRHEATER459A00	75.0	2	Standard	CRSINGLE057A00
						High	CRSINGLE059A00
		575-3-60	CRHEATER460A00	24.8	2	Standard	—
			CRHEATER461A00	49.6	2	Standard	CRSINGLE057A00
			CRHEATER462A00	74.4	2	Standard	CRSINGLE057A00
	HIGH	208/230-3-60	CRHEATER454A00	25.0	2	Standard	CRSINGLE056A00
						High	CRSINGLE058A00
			CRHEATER455A00	50.0	2	Standard	CRSINGLE056A00
						High	CRSINGLE058A00
			CRHEATER456A00	75.0	2	Standard	CRSINGLE056A00
						High	CRSINGLE058A00
		460-3-60	CRHEATER457A00	25.0	2	Standard	CRSINGLE057A00
						High	CRSINGLE059A00
			CRHEATER458A00	50.0	2	Standard	CRSINGLE057A00
						High	CRSINGLE059A00
			CRHEATER459A00	75.0	2	Standard	CRSINGLE057A00
						High	CRSINGLE059A00
		575-3-60	CRHEATER460A00	24.8	2	Standard	—
			CRHEATER461A00	49.6	2	Standard	CRSINGLE057A00
			CRHEATER462A00	74.4	2	Standard	CRSINGLE057A00

NOTE(S):

a. High SCCR is not available on 575-3-60 units, units with Hot Gas Reheat option (e.g., Humidi-MiZer®), units with Phase Loss Monitor, units with Non-Fused Disconnect, or units with Powered Convenience Outlet.

Table 2 — 17.5 Ton Capacity Models - Vertical Duct Configuration

MODEL	IFM TYPE	NOMINAL V-Ph-Hz	ELECTRIC HEATER P/N	NOMINAL kW	STAGES	SCCR RATING[a]	SINGLE POINT KIT
50FC/559K/RAV	STD/MED	208/230-3-60	CRHEATER454A00	25.0	2	Standard	—
						High	—
			CRHEATER455A00	50.0	2	Standard	CRSINGLE056A00
						High	CRSINGLE058A00
			CRHEATER456A00	75.0	2	Standard	CRSINGLE056A00
						High	CRSINGLE058A00
		460-3-60	CRHEATER457A00	25.0	2	Standard	—
						High	—
			CRHEATER458A00	50.0	2	Standard	CRSINGLE057A00[b]
						High	CRSINGLE059A00[c]
			CRHEATER459A00	75.0	2	Standard	CRSINGLE057A00
						High	CRSINGLE059A00
		575-3-60	CRHEATER460A00	24.8	2	Standard	—
			CRHEATER461A00	49.6	2	Standard	CRSINGLE057A00[c]
			CRHEATER462A00	74.4	2	Standard	CRSINGLE057A00
	HIGH	208/230-3-60	CRHEATER454A00	25.0	2	Standard	—
						High	—
			CRHEATER455A00	50.0	2	Standard	CRSINGLE056A00
						High	CRSINGLE058A00
			CRHEATER456A00	75.0	2	Standard	CRSINGLE056A00
						High	CRSINGLE058A00
		460-3-60	CRHEATER457A00	25.0	2	Standard	—
						High	—
			CRHEATER458A00	50.0	2	Standard	CRSINGLE057A00
						High	CRSINGLE059A00
			CRHEATER459A00	75.0	2	Standard	CRSINGLE057A00
						High	CRSINGLE059A00
		575-3-60	CRHEATER460A00	24.8	2	Standard	—
			CRHEATER461A00	49.6	2	Standard	CRSINGLE057A00[c]
			CRHEATER462A00	74.4	2	Standard	CRSINGLE057A00

NOTE(S):

a. High SCCR is not available on 575-3-60 units, units with Hot Gas Reheat option (e.g., Humidi-MiZer®), units with Phase Loss Monitor, units with Non-Fused Disconnect, or units with Powered Convenience Outlet.
b. Required with powered convenience outlet and power exhaust.
c. Required with power exhaust.

Table 3 — 20 Ton Capacity Models - Vertical Duct Configuration

MODEL	IFM TYPE	NOMINAL V-Ph-Hz	ELECTRIC HEATER P/N	NOMINAL kW	STAGES	SCCR RATING[a]	SINGLE POINT KIT
50FC/559K/RAV	STD/MED	208/230-3-60	CRHEATER454A00	25.0	2	Standard	—
						High	—
			CRHEATER455A00	50.0	2	Standard	CRSINGLE056A00
						High	CRSINGLE058A00
			CRHEATER456A00	75.0	2	Standard	CRSINGLE056A00
						High	CRSINGLE058A00
		460-3-60	CRHEATER457A00	25.0	2	Standard	—
						High	—
			CRHEATER458A00	50.0	2	Standard	CRSINGLE057A00[b]
						High	CRSINGLE059A00[c]
			CRHEATER459A00	75.0	2	Standard	CRSINGLE057A00
						High	CRSINGLE059A00
		575-3-60	CRHEATER460A00	24.8	2	Standard	—
			CRHEATER461A00	49.6	2	Standard	CRSINGLE057A00[c]
			CRHEATER462A00	74.4	2	Standard	CRSINGLE057A00
	HIGH	208/230-3-60	CRHEATER454A00	25.0	2	Standard	CRSINGLE057A00[c]
						High	CRSINGLE058A00[c]
			CRHEATER455A00	50.0	2	Standard	CRSINGLE056A00
						High	CRSINGLE058A00
			CRHEATER456A00	75.0	2	Standard	CRSINGLE056A00
						High	CRSINGLE058A00
		460-3-60	CRHEATER457A00	25.0	2	Standard	—
						High	—
			CRHEATER458A00	50.0	2	Standard	CRSINGLE057A00
						High	CRSINGLE059A00
			CRHEATER459A00	75.0	2	Standard	CRSINGLE057A00
						High	CRSINGLE059A00
		575-3-60	CRHEATER460A00	24.8	2	Standard	—
			CRHEATER461A00	49.6	2	Standard	CRSINGLE057A00
			CRHEATER462A00	74.4	2	Standard	CRSINGLE057A00
50FCQ/547K/RHV	STD/MED	208/230-3-60	CRHEATER454A00	25.0	2	Standard	CRSINGLE056A00
						High	CRSINGLE058A00
			CRHEATER455A00	50.0	2	Standard	CRSINGLE056A00
						High	CRSINGLE058A00
			CRHEATER456A00	75.0	2	Standard	CRSINGLE056A00
						High	CRSINGLE058A00
		460-3-60	CRHEATER457A00	25.0	2	Standard	CRSINGLE057A00
						High	CRSINGLE059A00
			CRHEATER458A00	50.0	2	Standard	CRSINGLE057A00
						High	CRSINGLE059A00
			CRHEATER459A00	75.0	2	Standard	CRSINGLE057A00
						High	CRSINGLE059A00
		575-3-60	CRHEATER460A00	24.8	2	Standard	CRSINGLE057A00[c]
			CRHEATER461A00	49.6	2	Standard	CRSINGLE057A00
			CRHEATER462A00	74.4	2	Standard	CRSINGLE057A00
	HIGH	208/230-3-60	CRHEATER454A00	25.0	2	Standard	CRSINGLE056A00
						High	CRSINGLE058A00
			CRHEATER455A00	50.0	2	Standard	CRSINGLE056A00
						High	CRSINGLE058A00
			CRHEATER456A00	75.0	2	Standard	CRSINGLE056A00
						High	CRSINGLE058A00
		460-3-60	CRHEATER457A00	25.0	2	Standard	CRSINGLE057A00
						High	CRSINGLE059A00
			CRHEATER458A00	50.0	2	Standard	CRSINGLE057A00
						High	CRSINGLE059A00
			CRHEATER459A00	75.0	2	Standard	CRSINGLE057A00
						High	CRSINGLE059A00
		575-3-60	CRHEATER460A00	24.8	2	Standard	CRSINGLE057A00
			CRHEATER461A00	49.6	2	Standard	CRSINGLE057A00
			CRHEATER462A00	74.4	2	Standard	CRSINGLE057A00

NOTE(S):

a. High SCCR is not available on 575-3-60 units, units with Hot Gas Reheat option (e.g., Humidi-MiZer®), units with Phase Loss Monitor, units with Non-Fused Disconnect, or units with Powered Convenience Outlet.
b. Required with Powered Convenience Outlet and/or Power Exhaust.
c. Required with Power Exhaust.

Table 4 — 25 Ton Capacity Models - Vertical Duct Configuration

MODEL	IFM TYPE	NOM INAL V-Ph-Hz	ELECTRIC HEATER P/N	NOMINAL kW	STAGES	SCCR RATING[a]	SINGLE POINT KIT
50FC/559K/RAV	STD/MED	208/230-3-60	CRHEATER454A00	25.0	2	Standard	CRSINGLE056A00
						High	CRSINGLE058A00
			CRHEATER455A00	50.0	2	Standard	CRSINGLE056A00
						High	CRSINGLE058A00
			CRHEATER456A00	75.0	2	Standard	CRSINGLE056A00
						High	CRSINGLE058A00
		460-3-60	CRHEATER457A00	25.0	2	Standard	—
						High	—
			CRHEATER458A00	50.0	2	Standard	CRSINGLE057A00
						High	CRSINGLE059A00
			CRHEATER459A00	75.0	2	Standard	CRSINGLE057A00
						High	CRSINGLE059A00
		575-3-60	CRHEATER460A00	24.8	2	Standard	—
			CRHEATER461A00	49.6	2	Standard	CRSINGLE057A00[b]
			CRHEATER462A00	74.4	2	Standard	CRSINGLE057A00
	HIGH	208/230-3-60	CRHEATER454A00	25.0	2	Standard	CRSINGLE056A00
						High	CRSINGLE058A00
			CRHEATER455A00	50.0	2	Standard	CRSINGLE056A00
						High	CRSINGLE058A00
			CRHEATER456A00	75.0	2	Standard	CRSINGLE056A00
						High	CRSINGLE058A00
		460-3-60	CRHEATER457A00	25.0	2	Standard	CRSINGLE057A00[b]
						High	CRSINGLE059A00[b]
			CRHEATER458A00	50.0	2	Standard	CRSINGLE057A00
						High	CRSINGLE059A00
			CRHEATER459A00	75.0	2	Standard	CRSINGLE057A00
						High	CRSINGLE059A00
		575-3-60	CRHEATER460A00	24.8	2	Standard	—
			CRHEATER461A00	49.6	2	Standard	CRSINGLE057A00
			CRHEATER462A00	74.4	2	Standard	CRSINGLE057A00

Table 4 — 25 Ton Capacity Models - Vertical Duct Configuration (cont)

MODEL	IFM TYPE	NOM INAL V-Ph-Hz	ELECTRIC HEATER P/N	NOMINAL kW	STAGES	SCCR RATING[a]	SINGLE POINT KIT
50FCQ/547K/RHV	STD/MED	208/230-3-60	CRHEATER454A00	25.0	2	Standard	CRSINGLE056A00
						High	CRSINGLE058A00
			CRHEATER455A00	50.0	2	Standard	CRSINGLE056A00
						High	CRSINGLE058A00
			CRHEATER456A00	75.0	2	Standard	CRSINGLE056A00
						High	CRSINGLE058A00
		460-3-60	CRHEATER457A00	25.0	2	Standard	CRSINGLE057A00
						High	CRSINGLE059A00
			CRHEATER458A00	50.0	2	Standard	CRSINGLE057A00
						High	CRSINGLE059A00
			CRHEATER459A00	75.0	2	Standard	CRSINGLE057A00
						High	CRSINGLE059A00
		575-3-60	CRHEATER460A00	24.8	2	Standard	CRSINGLE057A00
			CRHEATER461A00	49.6	2	Standard	CRSINGLE057A00
			CRHEATER462A00	74.4	2	Standard	CRSINGLE057A00
	HIGH	208/230-3-60	CRHEATER454A00	25.0	2	Standard	CRSINGLE056A00
						High	CRSINGLE058A00
			CRHEATER455A00	50.0	2	Standard	CRSINGLE056A00
						High	CRSINGLE058A00
			CRHEATER456A00	75.0	2	Standard	CRSINGLE056A00
						High	CRSINGLE058A00
		460-3-60	CRHEATER457A00	25.0	2	Standard	CRSINGLE057A00
						High	CRSINGLE059A00
			CRHEATER458A00	50.0	2	Standard	CRSINGLE057A00
						High	CRSINGLE059A00
			CRHEATER459A00	75.0	2	Standard	CRSINGLE057A00
						High	CRSINGLE059A00
		575-3-60	CRHEATER460A00	24.8	2	Standard	CRSINGLE057A00
			CRHEATER461A00	49.6	2	Standard	CRSINGLE057A00
			CRHEATER462A00	74.4	2	Standard	CRSINGLE057A00

NOTE(S):

a. High SCCR is not available on 575-3-60 units, units with Hot Gas Reheat option (e.g., Humidi-MiZer®), units with Phase Loss Monitor, units with Non-Fused Disconnect, or units with Powered Convenience Outlet.
b. Required with Power Exhaust.

Table 5 — 27.5 Ton Capacity Models - Vertical Duct Configuration

MODEL	IFM TYPE	NOMINAL V-Ph-Hz	ELECTRIC HEATER P/N	NOMINAL kW	STAGES	SCCR RATING[a]	SINGLE POINT KIT
50FC/559K/RAV	STD/MED	208/230-3-60	CRHEATER454A00	25.0	2	Standard	CRSINGLE056A00
						High	CRSINGLE058A00
			CRHEATER455A00	50.0	2	Standard	CRSINGLE056A00
						High	CRSINGLE058A00
			CRHEATER456A00	75.0	2	Standard	CRSINGLE056A00
						High	CRSINGLE058A00
		460-3-60	CRHEATER457A00	25.0	2	Standard	—
						High	—
			CRHEATER458A00	50.0	2	Standard	CRSINGLE057A00
						High	CRSINGLE059A00
			CRHEATER459A00	75.0	2	Standard	CRSINGLE057A00
						High	CRSINGLE059A00
		575-3-60	CRHEATER460A00	24.8	2	Standard	—
			CRHEATER461A00	49.6	2	Standard	CRSINGLE057A00[b]
			CRHEATER462A00	74.4	2	Standard	CRSINGLE057A00
	HIGH	208/230-3-60	CRHEATER454A00	25.0	2	Standard	CRSINGLE056A00
						High	CRSINGLE058A00
			CRHEATER455A00	50.0	2	Standard	CRSINGLE056A00
						High	CRSINGLE058A00
			CRHEATER456A00	75.0	2	Standard	CRSINGLE056A00
						High	CRSINGLE058A00
		460-3-60	CRHEATER457A00	25.0	2	Standard	CRSINGLE057A00[b]
						High	CRSINGLE059A00[b]
			CRHEATER458A00	50.0	2	Standard	CRSINGLE057A00
						High	CRSINGLE059A00
			CRHEATER459A00	75.0	2	Standard	CRSINGLE057A00
						High	CRSINGLE059A00
		575-3-60	CRHEATER460A00	24.8	2	Standard	—
			CRHEATER461A00	49.6	2	Standard	CRSINGLE057A00
			CRHEATER462A00	74.4	2	Standard	CRSINGLE057A00

NOTE(S):

a. High SCCR is not available on 575-3-60 units, units with Hot Gas Reheat option (e.g., Humidi-MiZer®), units with Phase Loss Monitor, units with Non-Fused Disconnect, or units with Powered Convenience Outlet.
b. Required with Power Exhaust.

Table 6 — 15 Ton Capacity Models - Horizontal Duct Configuration

MODEL	IFM TYPE[a]	NOMINAL V-Ph-Hz	ELECTRIC HEATER P/N	NOMINAL kW	STAGES	SCCR RATING[b]	SINGLE POINT KIT
50FCQ/547K/RHV	HIGH	208/230-3-60	CRHEATER463A00	25.0	2	Standard	CRSINGLE056A00
						High	CRSINGLE058A00
			CRHEATER464A00	50.0	2	Standard	CRSINGLE056A00
						High	CRSINGLE058A00
			CRHEATER465A00	75.0	2	Standard	CRSINGLE056A00
						High	CRSINGLE058A00
		460-3-60	CRHEATER466A00	25.0	2	Standard	CRSINGLE057A00
						High	CRSINGLE059A00
			CRHEATER467A00	50.0	2	Standard	CRSINGLE057A00
						High	CRSINGLE059A00
			CRHEATER468A00	75.0	2	Standard	CRSINGLE057A00
						High	CRSINGLE059A00
		575-3-60	CRHEATER469A00	24.8	2	Standard	—
			CRHEATER470A00	49.6	2	Standard	CRSINGLE057A00
			CRHEATER471A00	74.4	2	Standard	CRSINGLE057A00

NOTE(S):

a. Only high static indoor fan motors are available on this horizontal model.
b. High SCCR is not available on 575-3-60 units, units with Hot Gas Reheat option (e.g., Humidi-MiZer®), units with Phase Loss Monitor, units with Non-Fused Disconnect, or units with Powered Convenience Outlet.

Table 7 — 17.5 Ton Capacity Models - Horizontal Duct Configuration

MODEL	IFM TYPE[a]	NOM V-Ph-Hz	ELECTRIC HEATER P/N	NOMINAL kW	STAGES	SCCR Rating[b]	SINGLE POINT KIT
50FC/559K/RAV	HIGH	208/230-3-60	CRHEATER463A00	25.0	2	Standard	CRSINGLE056A00[c]
						High	—
			CRHEATER464A00	50.0	2	Standard	CRSINGLE056A00
						High	CRSINGLE058A00
			CRHEATER465A00	75.0	2	Standard	CRSINGLE056A00
						High	CRSINGLE058A00
		460-3-60	CRHEATER466A00	25.0	2	Standard	—
						High	—
			CRHEATER467A00	50.0	2	Standard	CRSINGLE057A00
						High	CRSINGLE059A00
			CRHEATER468A00	75.0	2	Standard	CRSINGLE057A00
						High	CRSINGLE059A00
		575-3-60	CRHEATER469A00	24.8	2	Standard	—
			CRHEATER470A00	49.6	2	Standard	CRSINGLE057A00
			CRHEATER471A00	74.4	2	Standard	CRSINGLE057A00

NOTE(S):

a. Only high static indoor fan motors are available on this horizontal model.
b. High SCCR is not available on 575-3-60 units, units with Hot Gas Reheat option (e.g., Humidi-MiZer®), units with Phase Loss Monitor, units with Non-Fused Disconnect, or units with Powered Convenience Outlet.
c. Required with Powered Convenience Outlet and Power Exhaust.

Table 8 — 20 Ton Capacity Models - Horizontal Duct Configuration

MODEL	IFM TYPE[a]	NOM V-Ph-Hz	ELECTRIC HEATER P/N	NOMINAL kW	STAGES	SCCR RATING[b]	SINGLE POINT KIT
50FC/559K/RAV	HIGH	208/230-3-60	CRHEATER463A00	25.0	2	Standard	CRSINGLE056A00[c]
						High	CRSINGLE058A00[c]
			CRHEATER464A00	50.0	2	Standard	CRSINGLE056A00
						High	CRSINGLE058A00
			CRHEATER465A00	75.0	2	Standard	CRSINGLE056A00
						High	CRSINGLE058A00
		460-3-60	CRHEATER466A00	25.0	2	Standard	—
						High	—
			CRHEATER467A00	50.0	2	Standard	CRSINGLE057A00
						High	CRSINGLE059A00
			CRHEATER468A00	75.0	2	Standard	CRSINGLE057A00
						High	CRSINGLE059A00
		575-3-60	CRHEATER469A00	24.8	2	Standard	—
			CRHEATER470A00	49.6	2	Standard	CRSINGLE057A00
			CRHEATER471A00	74.4	2	Standard	CRSINGLE057A00
50FCQ/547K/RHV	HIGH	208/230-3-60	CRHEATER463A00	25.0	2	Standard	CRSINGLE056A00
						High	CRSINGLE058A00
			CRHEATER464A00	50.0	2	Standard	CRSINGLE056A00
						High	CRSINGLE058A00
			CRHEATER465A00	75.0	2	Standard	CRSINGLE056A00
						High	CRSINGLE058A00
		460-3-60	CRHEATER466A00	25.0	2	Standard	CRSINGLE057A00
						High	CRSINGLE059A00
			CRHEATER467A00	50.0	2	Standard	CRSINGLE057A00
						High	CRSINGLE059A00
			CRHEATER468A00	75.0	2	Standard	CRSINGLE057A00
						High	CRSINGLE059A00
		575-3-60	CRHEATER469A00	24.8	2	Standard	CRSINGLE057A00
			CRHEATER470A00	49.6	2	Standard	CRSINGLE057A00
			CRHEATER471A00	74.4	2	Standard	CRSINGLE057A00

NOTE(S):

a. Only high static indoor fan motors are available on this horizontal model.
b. High SCCR is not available on 575-3-60 units, units with Hot Gas Reheat option (e.g., Humidi-MiZer®), units with Phase Loss Monitor, units with Non-Fused Disconnect, or units with Powered Convenience Outlet.
c. Required with Power Exhaust.

Table 9 — 25 Ton Capacity Models - Horizontal Duct Configuration

MODEL	IFM TYPE[a]	NOM V-Ph-Hz	ELECTRIC HEATER P/N	NOMINAL kW	STAGES	SCCR RATING[b]	SINGLE POINT KIT
50FC/559K/RAV	HIGH	208/230-3-60	CRHEATER463A00	25.0	2	Standard	CRSINGLE056A00
						High	CRSINGLE058A00
			CRHEATER464A00	50.0	2	Standard	CRSINGLE056A00
						High	CRSINGLE058A00
			CRHEATER465A00	75.0	2	Standard	CRSINGLE056A00
						High	CRSINGLE058A00
		460-3-60	CRHEATER466A00	25.0	2	Standard	CRSINGLE057A00[c]
						High	CRSINGLE059A00[c]
			CRHEATER467A00	50.0	2	Standard	CRSINGLE057A00
						High	CRSINGLE059A00
			CRHEATER468A00	75.0	2	Standard	CRSINGLE057A00
						High	CRSINGLE059A00
		575-3-60	CRHEATER469A00	24.8	2	Standard	—
			CRHEATER470A00	49.6	2	Standard	CRSINGLE057A00
			CRHEATER471A00	74.4	2	Standard	CRSINGLE057A00
50FCQ/547K/RHV	HIGH	208/230-3-60	CRHEATER463A00	25.0	2	Standard	CRSINGLE056A00
						High	CRSINGLE058A00
			CRHEATER464A00	50.0	2	Standard	CRSINGLE056A00
						High	CRSINGLE058A00
			CRHEATER465A00	75.0	2	Standard	CRSINGLE056A00
						High	CRSINGLE058A00
		460-3-60	CRHEATER466A00	25.0	2	Standard	CRSINGLE057A00
						High	CRSINGLE059A00
			CRHEATER467A00	50.0	2	Standard	CRSINGLE057A00
						High	CRSINGLE059A00
			CRHEATER468A00	75.0	2	Standard	CRSINGLE057A00
						High	CRSINGLE059A00
		575-3-60	CRHEATER469A00	24.8	2	Standard	CRSINGLE057A00
			CRHEATER470A00	49.6	2	Standard	CRSINGLE057A00
			CRHEATER471A00	74.4	2	Standard	CRSINGLE057A00

NOTE(S):

a. Only high static indoor fan motors are available on this horizontal model.
b. High SCCR is not available on 575-3-60 units, units with Hot Gas Reheat option (e.g., Humidi-MiZer®), units with Phase Loss Monitor, units with Non-Fused Disconnect, or units with Powered Convenience Outlet.
c. Required with Power Exhaust.

Table 10 — 27.5 Ton Capacity Models - Horizontal Duct Configuration

MODEL	IFM TYPE[a]	NOMINAL V-Ph-Hz	ELECTRIC HEATER P/N	NOMINAL kW	STAGES	SCCR RATING[b]	SINGLE POINT KIT
50FC/559K/RAV	HIGH	208/230-3-60	CRHEATER463A00	25.0	2	Standard	CRSINGLE056A00
						High	CRSINGLE058A00
			CRHEATER464A00	50.0	2	Standard	CRSINGLE056A00
						High	CRSINGLE058A00
			CRHEATER465A00	75.0	2	Standard	CRSINGLE056A00
						High	CRSINGLE058A00
		460-3-60	CRHEATER466A00	25.0	2	Standard	CRSINGLE057A00[c]
						High	CRSINGLE059A00[c]
			CRHEATER467A00	50.0	2	Standard	CRSINGLE057A00
						High	CRSINGLE059A00
			CRHEATER468A00	75.0	2	Standard	CRSINGLE057A00
						High	CRSINGLE059A00
		575-3-60	CRHEATER469A00	24.8	2	Standard	CRSINGLE057A00[c]
			CRHEATER470A00	49.6	2	Standard	CRSINGLE057A00
			CRHEATER471A00	74.4	2	Standard	CRSINGLE057A00

NOTE(S):

a. Only high static indoor fan motors are available on this horizontal model.
b. High SCCR is not available on 575-3-60 units, units with Hot Gas Reheat option (e.g., Humidi-MiZer®), units with Phase Loss Monitor, units with Non-Fused Disconnect, or units with Powered Convenience Outlet.
c. Required with Power Exhaust.

INSTALLATION

Heater Installation (All Units)

Perform the following procedure to install the accessory electric heaters:

1. Turn off power to the unit.
2. Remove electric heater section access panel, control box access panel, filter access panel, and blower access panel from base rooftop unit. (See Fig. 1.)

⚠ CAUTION

EQUIPMENT DAMAGE HAZARD

Failure to follow this caution may result in damage to equipment.

When removing panels from the unit, be careful not to damage the roof or other surfaces with the panels.

⚠ CAUTION

CUT HAZARD

Failure to follow this caution may result in personal injury.

When removing access panels or performing maintenance functions inside your unit, be aware of sharp sheet metal parts and screws. Although special care is taken to reduce sharp edges to a minimum, be extremely careful when handling parts or reaching into the unit.

3. Remove the block-off plate and save screws. Remove post adjacent to control box and post located between filter access and blower access. (See Fig. 2.)
4. Insert heater assembly through opening where block-off plate was previously removed. Let back end of heaters slide along support rails beneath fan deck. (See Fig. 3.)
5. Slide heaters until completely installed such that heater controls are completely in the unit. Using screws saved from Step 3, secure heater assembly. (See Fig. 4.)
6. Route heater power wires through grommeted notches in vertical fan deck support. (See Fig. 3.) Continue routing wires under coil and filter support through the bottom notched section of the control box. Avoid sheet metal edges and any protruding screws.
7. To be used with Standard SCCR (5ka) Units Only. Refer to Fig. 5 for wiring single point kit accessory when required. Using three 1/4-20 nuts, connect power wires to the load side of terminal block.

   If single point power entry is desired, a single point kit must be used. See Tables 2-10 for details on selecting the correct single point kit for the accessory heater being installed. Terminal block and fuse holder can be mounted using screws provided, locating the combination below unit terminal block. (See Fig. 6.) Heaters will be connected to the load side of the terminal block provided with kit. Load side of fuses to be connected to terminal block of main unit, at factory-installed option non-fused disconnect switch and molded case switch for 230v units with the High SCCR (Short-Circuit Current Rating) option or fuse holders for 460v units with the High SCCR option.

   For dual power entry, purchase terminal block HY11UC313 for 208-230 volt applications. Six 1/4-20 field supplied lock nuts required (P/N: AT56AB171). For 400v-50 Hz, 460v and 575v-60Hz applications purchase terminal block HY11UC125. Three 1/4-20 field-supplied screws required (P/N: AA45AB167). Mount in pre-drilled holes using field-supplied fasteners. Connect power leads from heaters to field-supplied terminal block.
8. Connect low voltage control plug from heater to the control plug from unit.
9. Re-install posts previously removed. When re-installing screws insure that wires do not come into contact with screw tips.
10. Re-install blower access, heater access, filter and control box access panels.
11. Mark nameplate with a check mark next to heater installed.

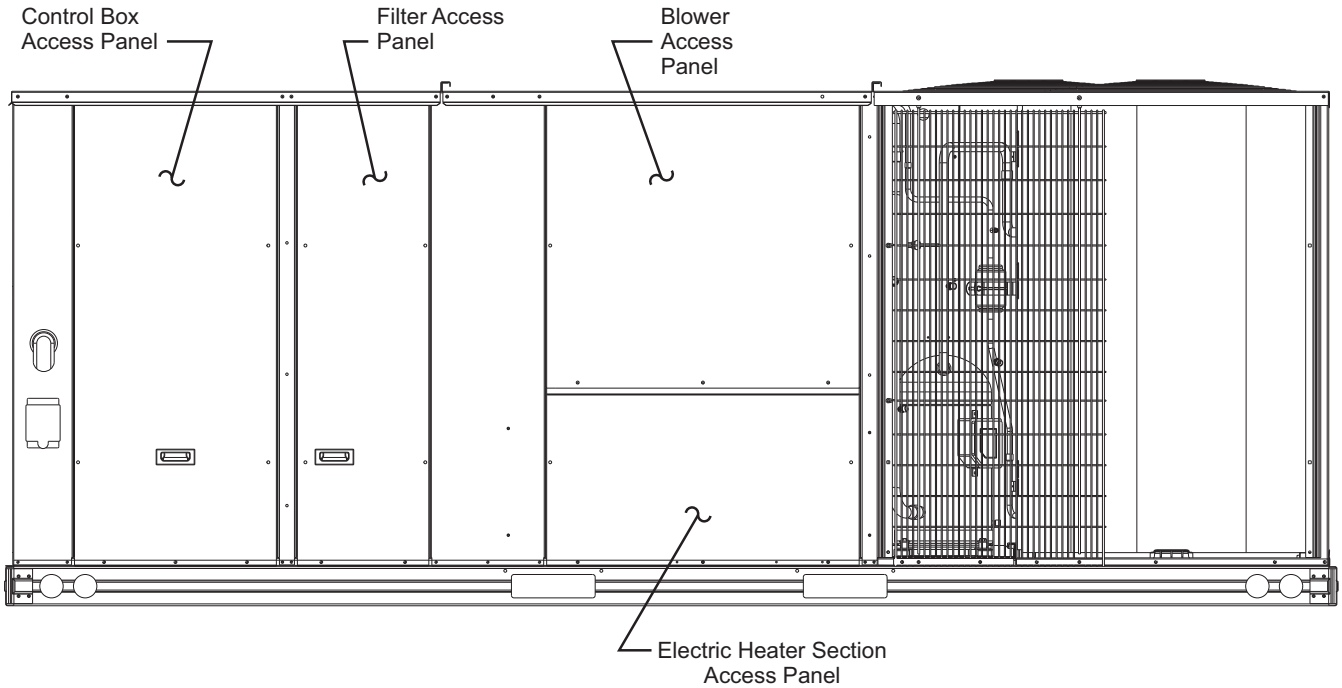

Fig. 1 — Typical Unit – Access Panel Locations

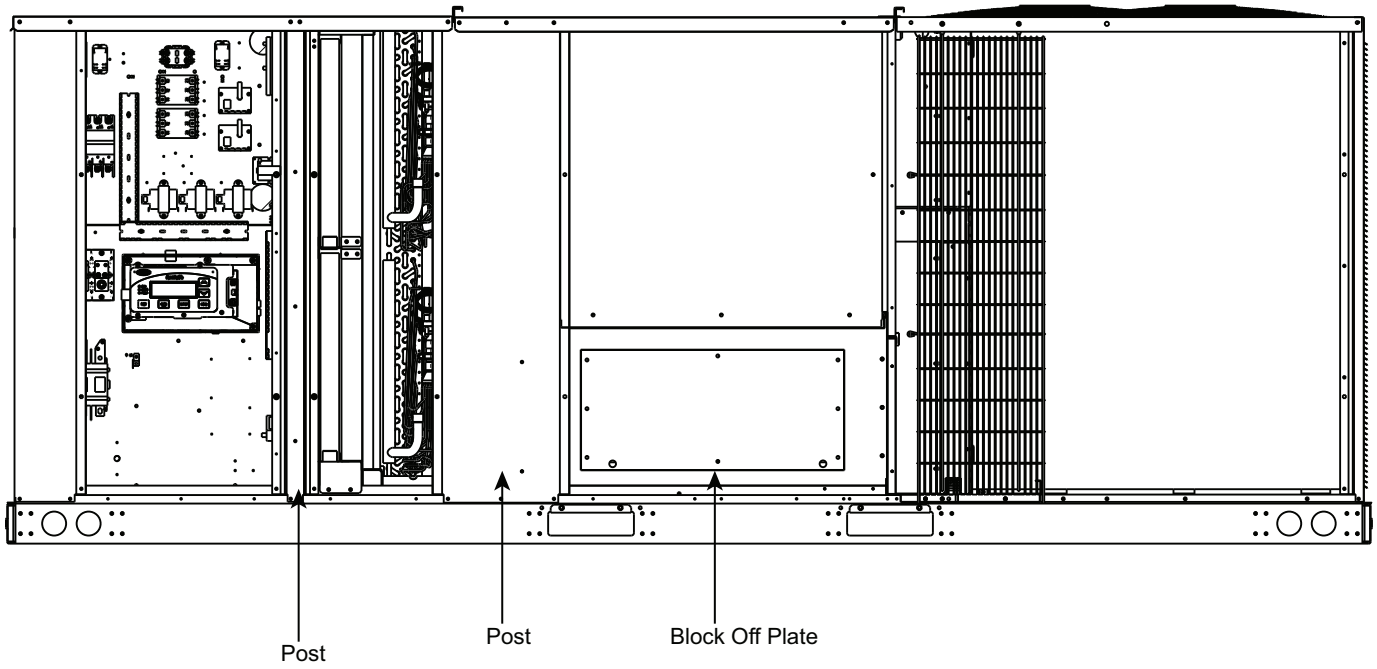

Fig. 2 — Block-Off Plate and Post Locations

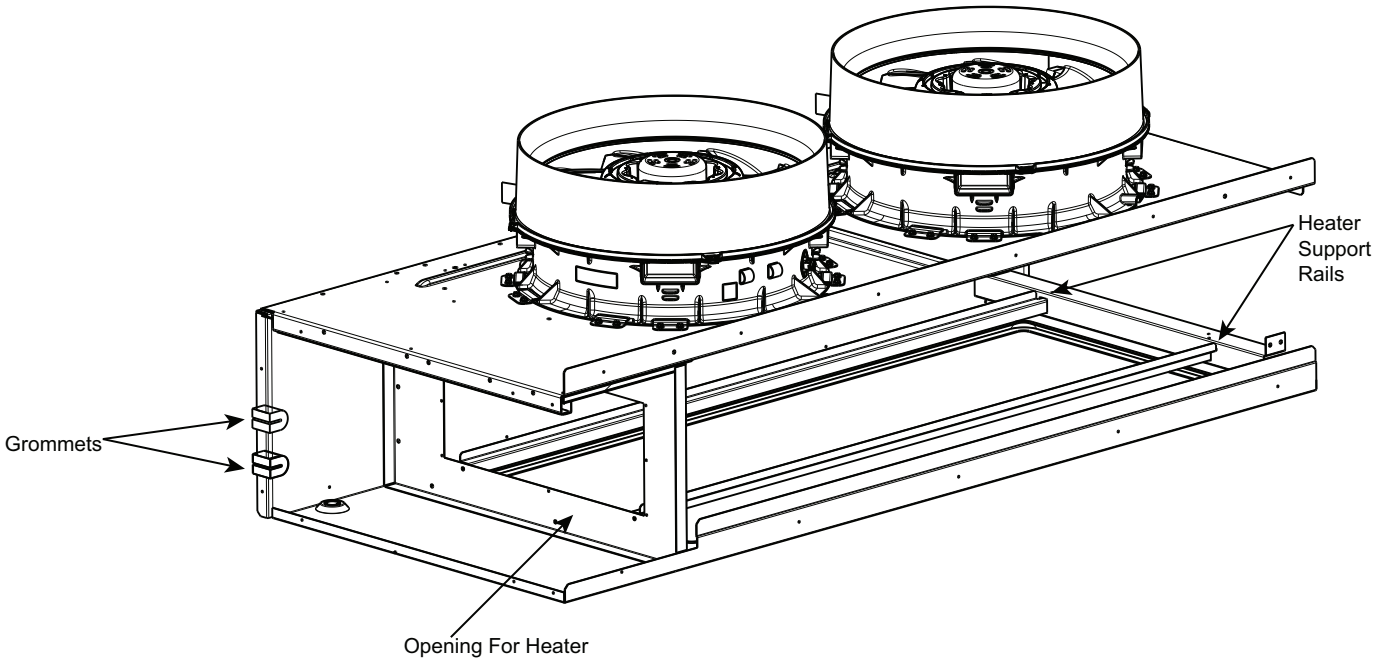

Fig. 3 — Opening for Electric Heater

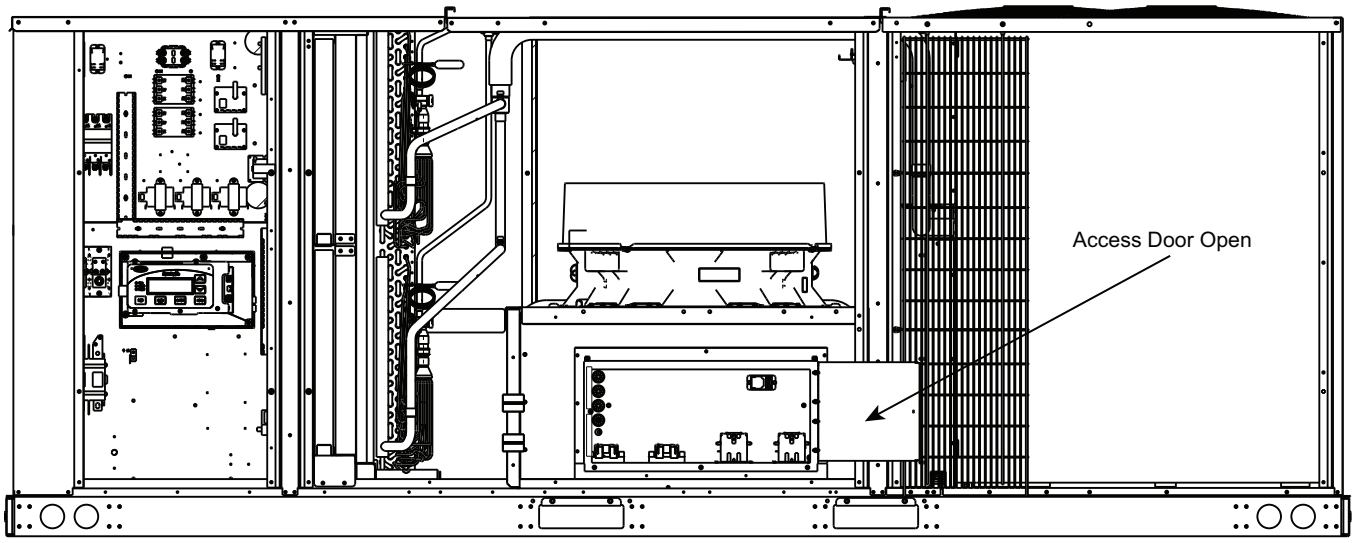

Fig. 4 — Electric Heater Accessory In Place (Shown with Access Door Opened)

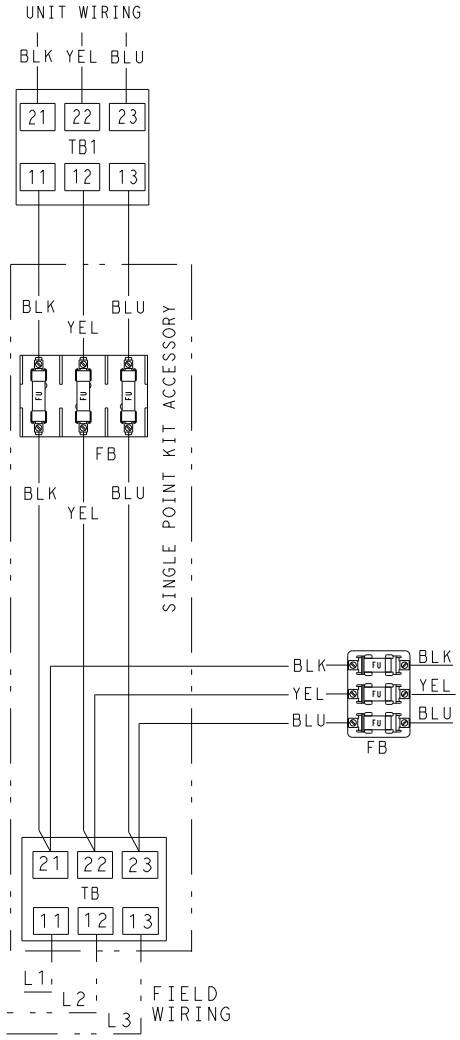

Fig. 5 — Wiring Diagram for Single Point Kit Accessory When Required

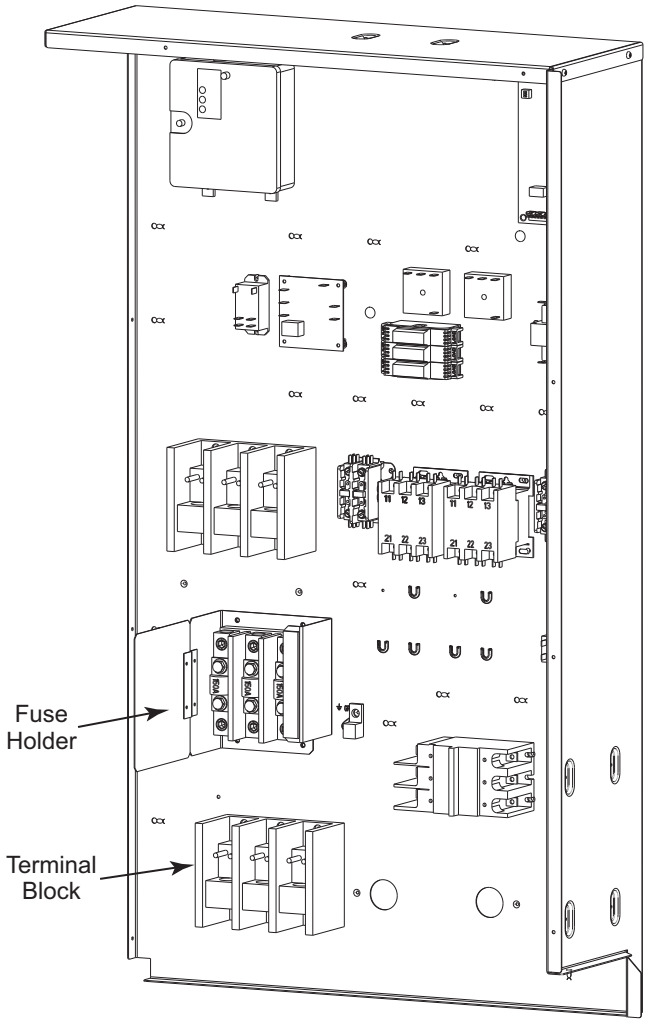

Fig. 6 — Single Point Installation

460V HIGH SCCR UNIT INSTALLATION (65KA SCCR)

1. Remove shroud screws and shroud. Install fuse block assembly in location shown in Fig. 7.
2. Route heater wires to fuse holders.
3. Insert wires in top holes of lugs.
4. Tighten screws in lug to clamp down on wires. Torque to 7.9 Nm (70 in.-lb).
5. Repeat for all heater wires.
6. Reattach shroud with 2 screws.
7. Attach power leads to control box fuse block, maintain color continuity. Tighten set screw: 60A fuse to 20 in.-lb (2.26 Nm), 100A Fuse to 40 in.-lb (4.52 Nm).

230V HIGH SCCR UNIT INSTALLATION (60KA SCCR)

1. Install terminal block assembly in location shown in Fig. 8.
2. Remove cover from terminal block assembly.
3. Route heater wires to terminal block assembly.

   NOTE: There may be 2 or 4 wires per leg depending on heater configuration.
4. Heater wires will be either 2 wires per leg or 4 wires per leg. Component assembly order is important for maintaining secure assembly and maximum distancing between components on each leg.

   For 4 wire/leg assembly: add lock washers (Item 5), turn bottom two wires so barrel of terminal is down as shown in Fig. 8. Add nut (Item 4) and tighten to 9-10 Nm (79 in.-lb). Add second lock washer (Item 5), the top two wires shall be installed with barrels "up." Add second nut (Item 4) and tighten to 9-10 Nm (79-88 in.-lb).

   For 2 wire/lug assembly: add lock washers (Item 5), wire terminal barrels may be up or down. Add nut (Item 4) and tighten to 9-10 Nm (79-88 in.-lb).
5. Repeat for all heater wires maintain wire color continuity - black to black. Yellow to yellow and blue to blue.
6. Remove leg cover from line side of control box main fuse block. Install line side power wires into bottom holes of fuse block lugs. Maintain wire color continuity. Torque set screw in lug 42 Nm (375 in.-lb). Reinstall cover.

TYPICAL WIRING DIAGRAMS

See Fig. 9-26 for typical wiring diagrams.

START-UP

1. Check electrical connections
2. Turn thermostat to OFF position.
3. Restore power to unit.
4. Check voltage supply and match the reading against unit and heater nameplate.
5. Slowly turn thermostat up until fan comes on. First stage of electric heat should be on depending on thermostat.
6. Continue raising thermostat until stage 2 comes on.
7. Set temperature to desired level or return thermostat to the OFF position.

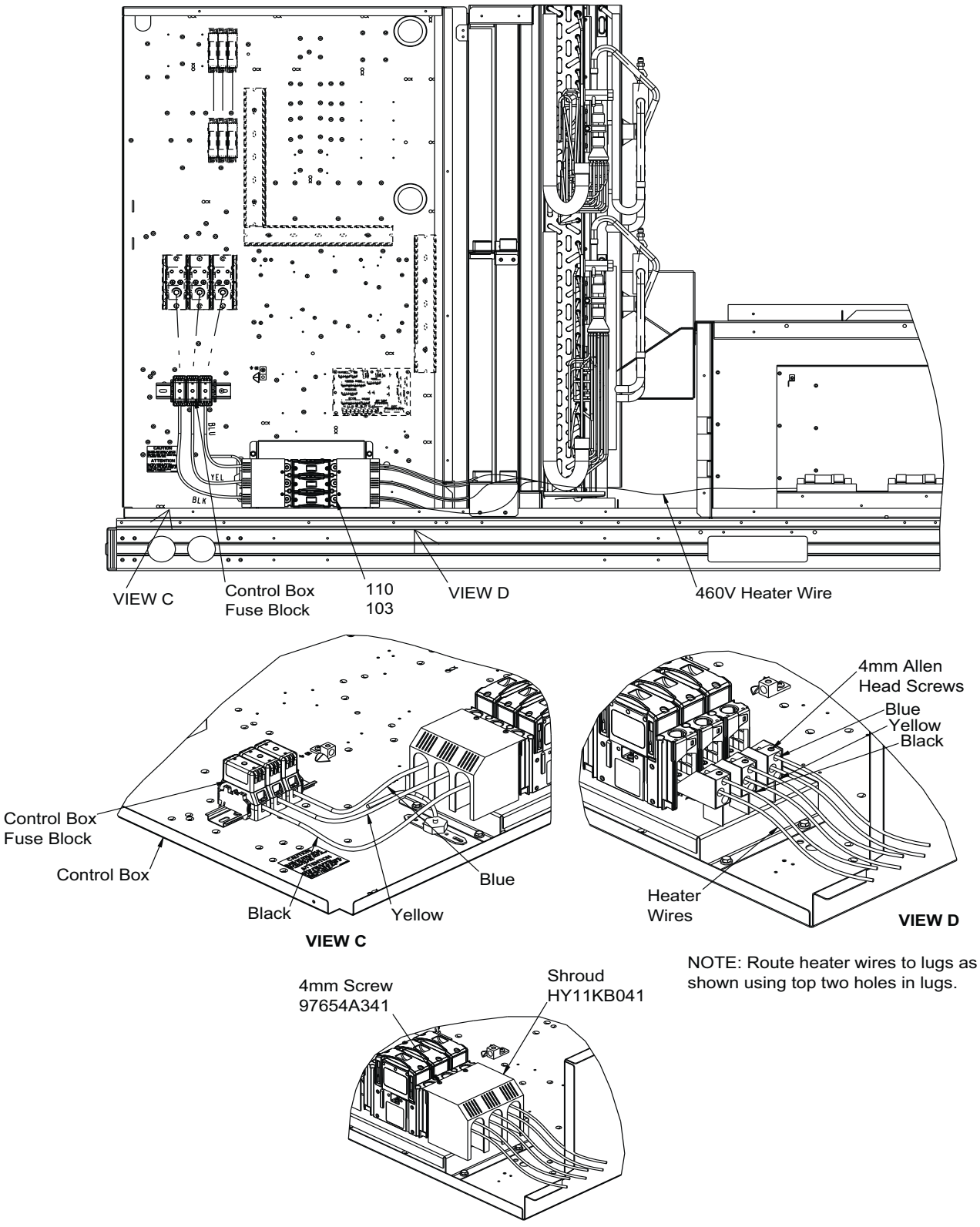

Fig. 7 — 460V Single Point Power Assembly Location (High SCCR)

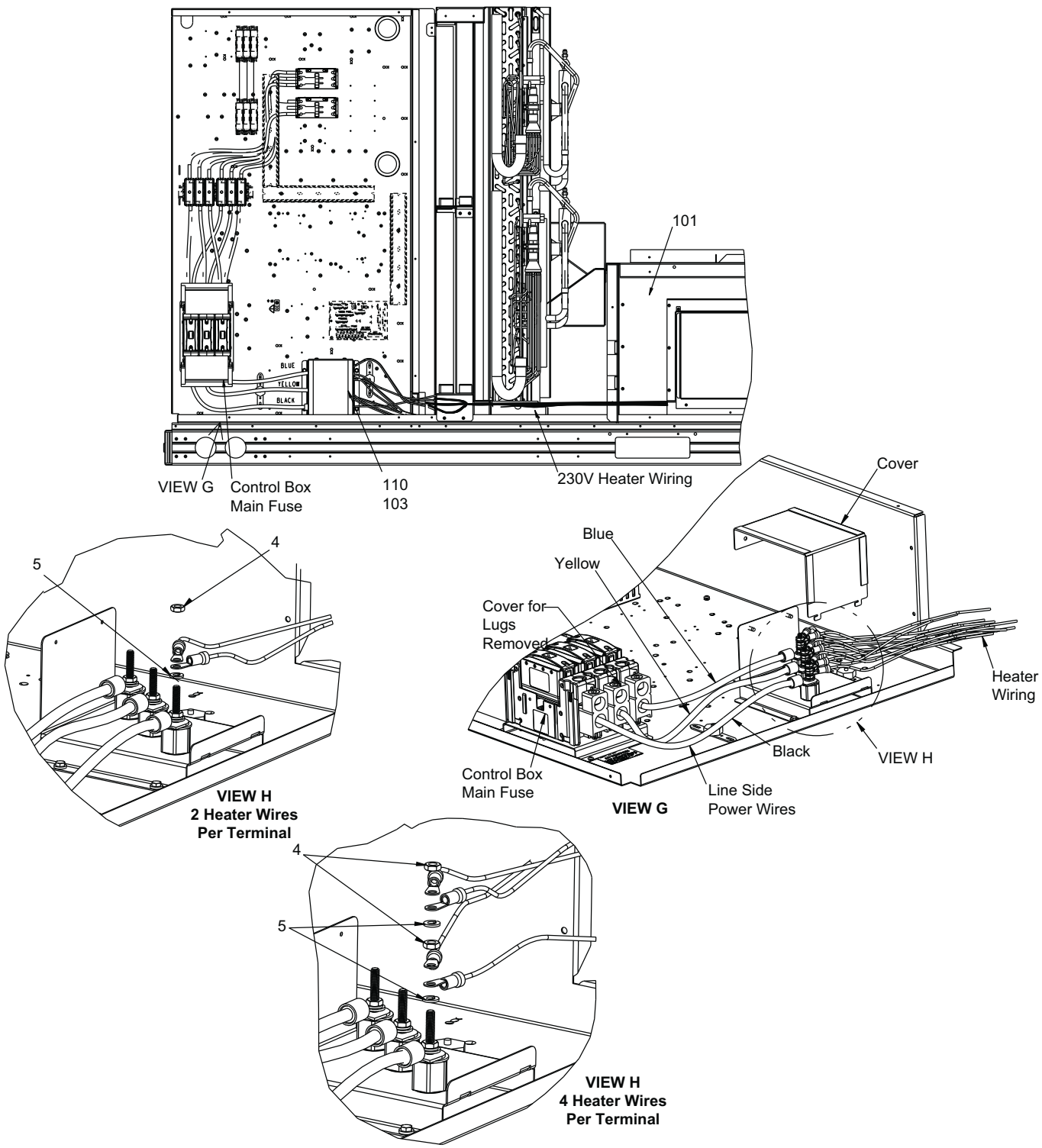

Fig. 8 — 230V Single Point Power Assembly Location (High SCCR)

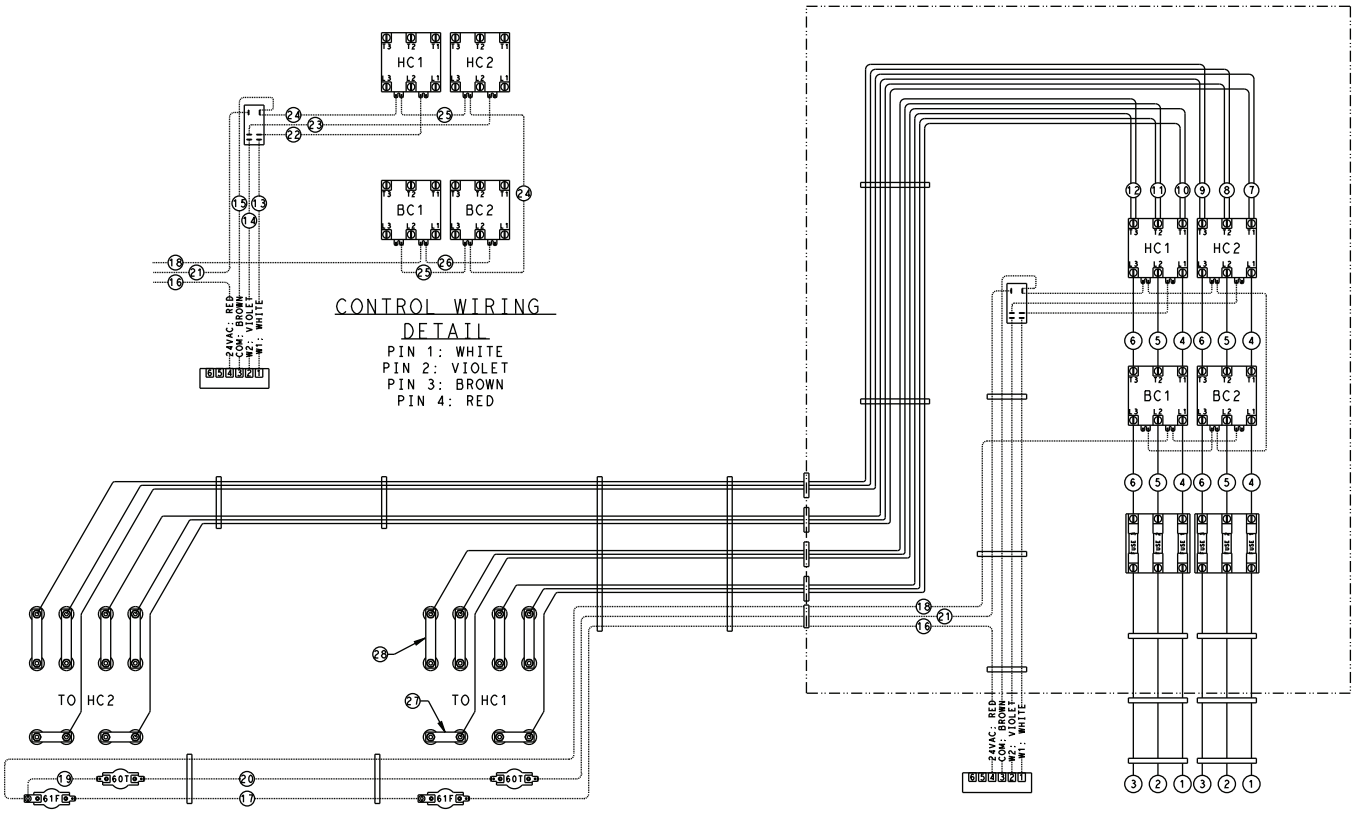

DWG No. 50HE004115

NOTE(S):

1. Line voltage heater circuit wires to be stranded 14 gauge min with 2/64 in. thick thermoplastic insulation rated at 105°C and 600 volts.
2. Low voltage control circuit wires to be stranded 18 gauge with 2/64 in. thick thermoplastic insulation rated at 105°C and 600 volts.
3. Reference Backer wiring accessory P/N 052-490694-61 for item numbers.

Fig. 9 — Typical Control Wiring Heater Accessory CRHEATER454A00 (208/240V, 3-Phase, Nominal kW 25.0, 2-Step, 60 Hz, Vertical)

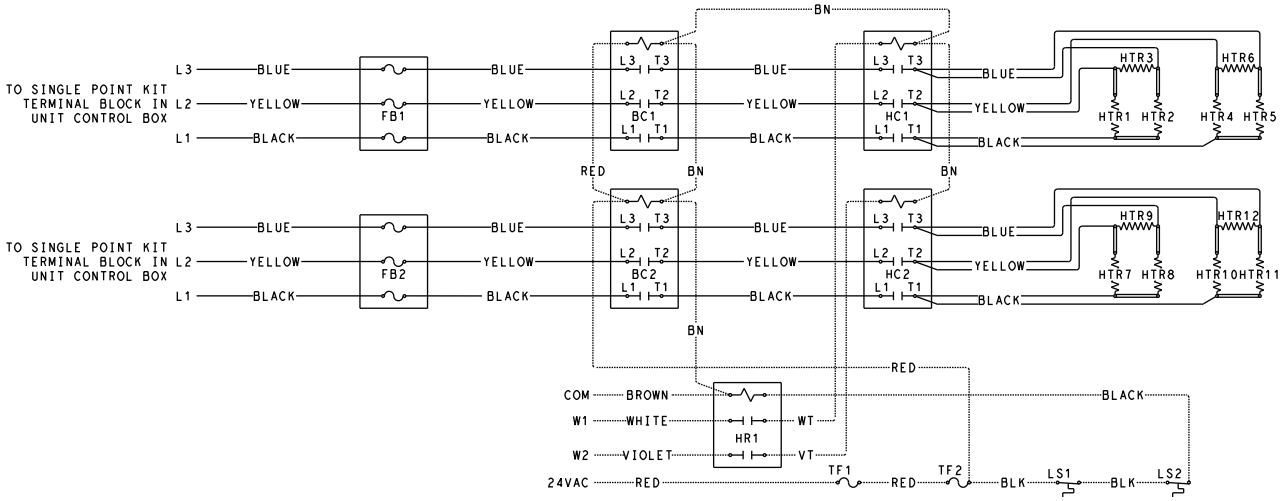

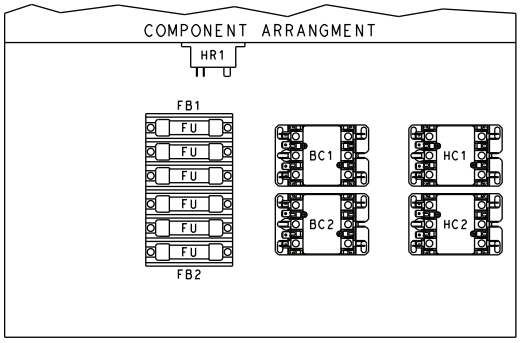

WARNING: ELECTRICAL SHOCK HAZARD
DISCONNECT ALL POWER BEFORE SERVICING.

NOTES:
* Power supply wiring per NEC & local codes. Suitable for at least 75°C
Use copper conductor wiring only. Field wire, NEC Class I
** Replace auto reset limit switch with Therm-O-Disc 60TX11 L135-50F
*** Replace thermal fuse with Therm-O-Disc 61F14 L225F
SINGLE POINT CONNECTION

DWG No. 50HE004115

LEGEND

BC — Backup Contactor
FB — Fuse Block
FU — Fuse
HTR — Heater
HC — Heater Contactor
HR — Heater Relay
LS — Limit Switch
TF — Thermal Fuse

Fig. 9 — Typical Control Wiring Heater Accessory CRHEATER454A00 (208/240V, 3-Phase, Nominal kW 25.0, 2-Step, 60 Hz, Vertical) (cont)

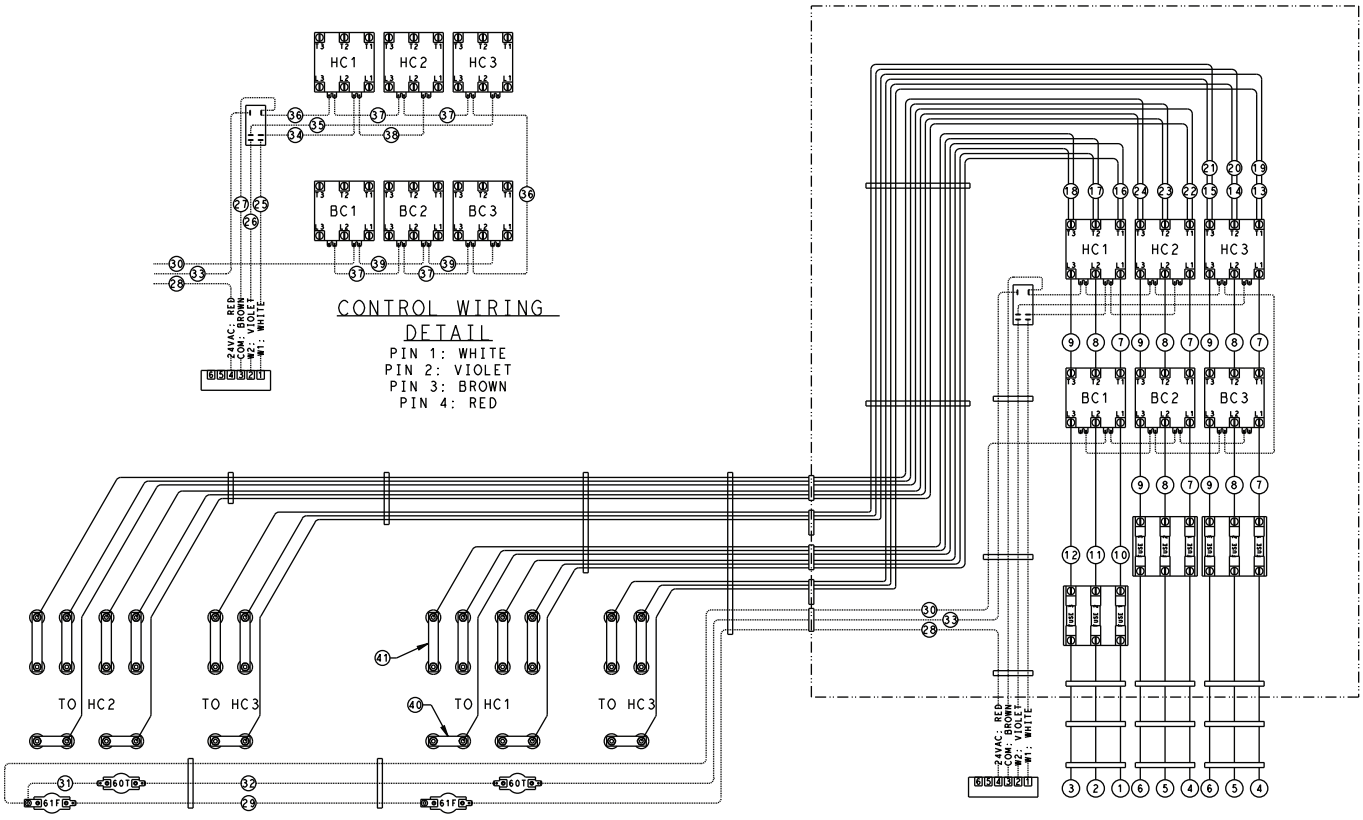

DWG. No. 50HE004116

NOTE(S):

1. Line voltage heater circuit wires to be stranded 14 gauge min with 2/64 in. thick thermoplastic insulation rated at 105°C and 600 volts.
2. Low voltage control circuit wires to be stranded 18 gauge with 2/64 in. thick thermoplastic insulation rated at 105°C and 600 volts.
3. Reference Backer wiring accessory P/N 052-490694-61 for item numbers.

Fig. 10 — Typical Control Wiring Heater Accessory CRHEATER455A00 (208/240V, 3-Phase, Nominal kW 50.0, 2-Step, 60 Hz, Vertical)

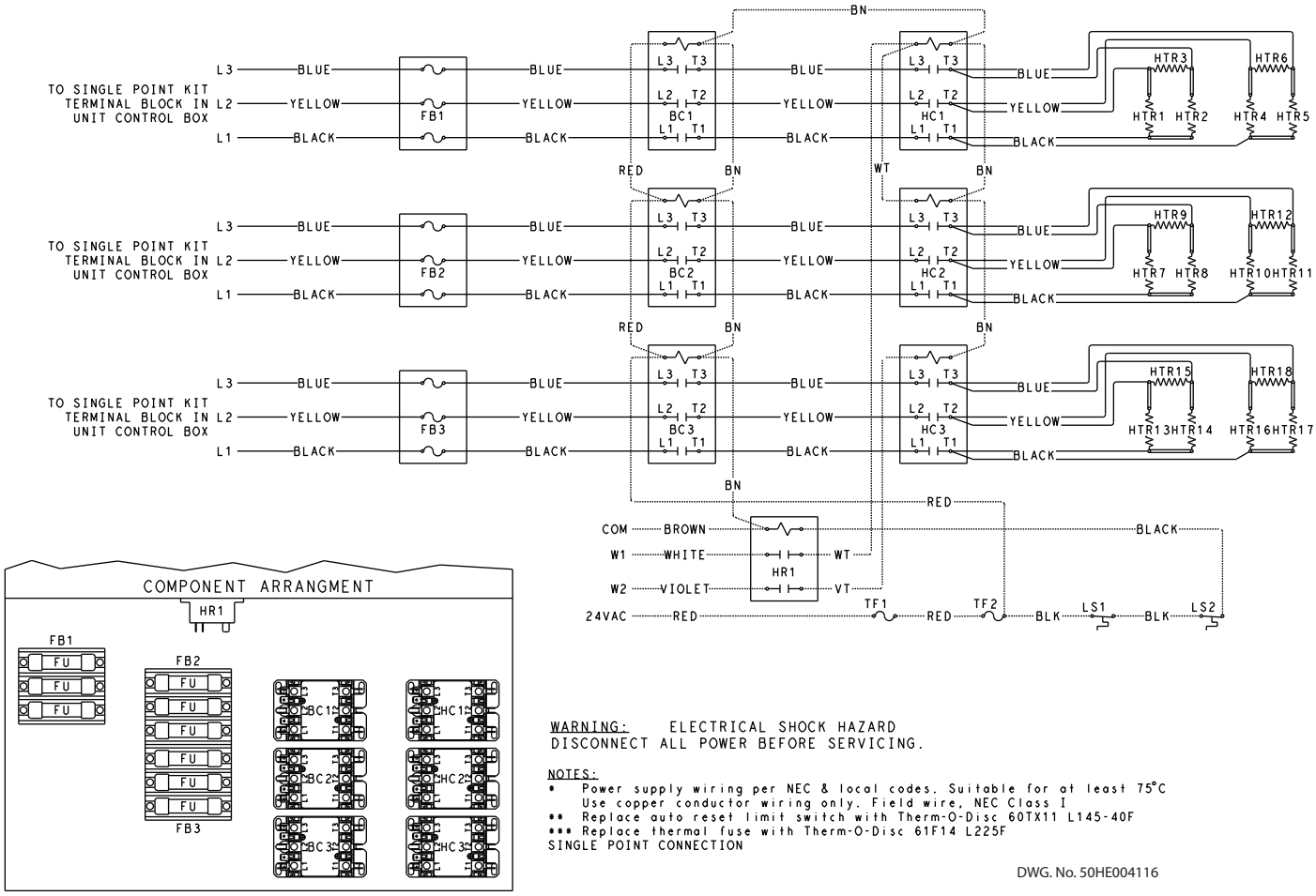

LEGEND

BC — Backup Contactor
FB — Fuse Block
FU — Fuse
HTR — Heater
HC — Heater Contactor
HR — Heater Relay
LS — Limit Switch
TF — Thermal Fuse

Fig. 10 — Typical Control Wiring Heater Accessory CRHEATER455A00 (208/240V, 3-Phase, Nominal kW 50.0, 2-Step, 60 Hz, Vertical) (cont)

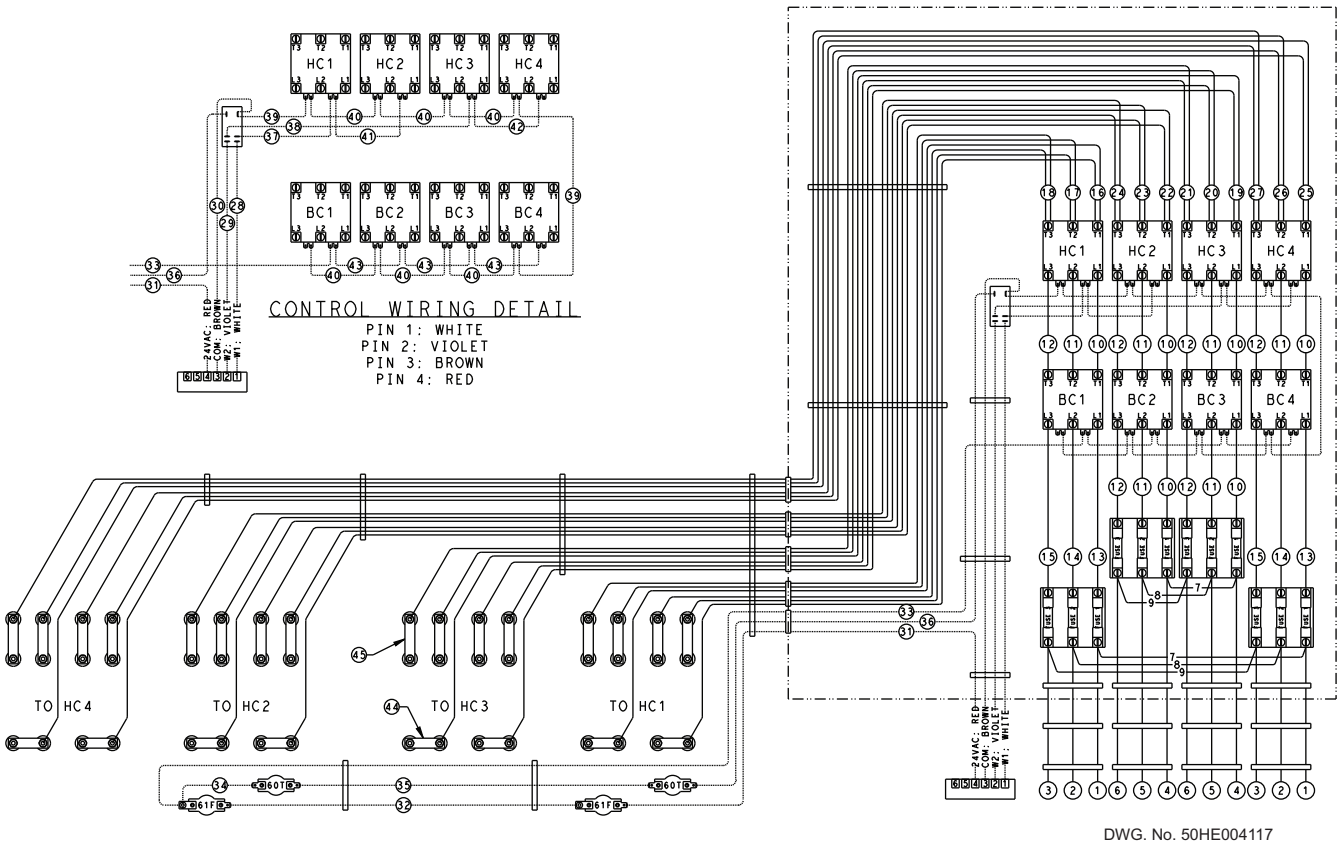

NOTE(S):

1. Line voltage heater circuit wires to be stranded 14 gauge min with 2/64 in. thick thermoplastic insulation rated at 105°C and 600 volts.
2. Low voltage control circuit wires to be stranded 18 gauge with 2/64 in. thick thermoplastic insulation rated at 105°C and 600 volts.
3. Reference Backer wiring accessory P/N 052-490694-61 for item numbers.

Fig. 11 — Typical Control Wiring Heater Accessory CREAHTER456A00 (208/240V, 3-Phase, Nominal kW 75.0, 2-Step, 60 Hz, Vertical)

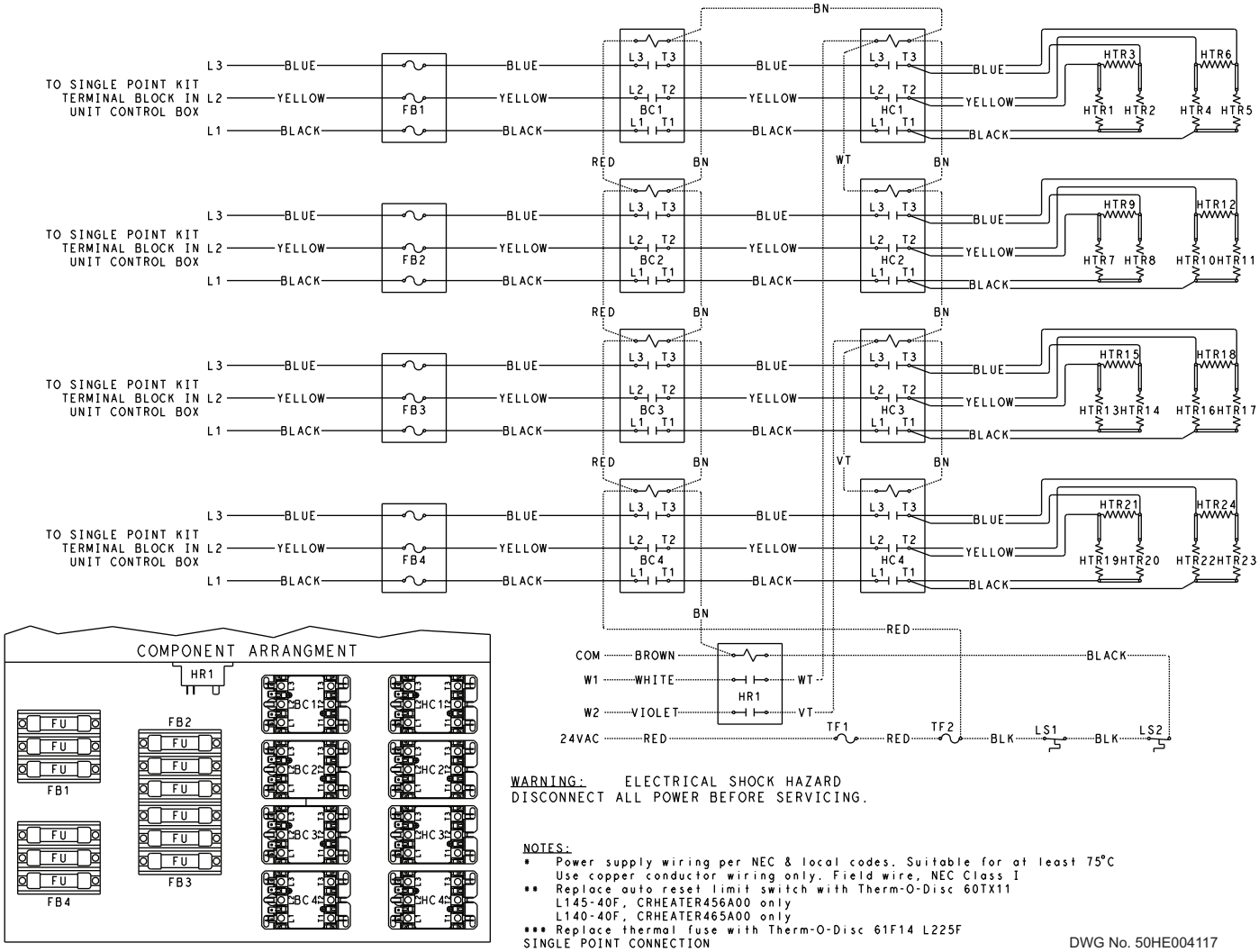

LEGEND

BC — Backup Contactor
FB — Fuse Block
FU — Fuse
HTR — Heater
HC — Heater Contactor
HR — Heater Relay
LS — Limit Switch
TF — Thermal Fuse

Fig. 11 — Typical Control Wiring Heater Accessory CREAHTER456A00 (208/240V, 3-Phase, Nominal kW 75.0, 2-Step, 60 Hz, Vertical) (cont)

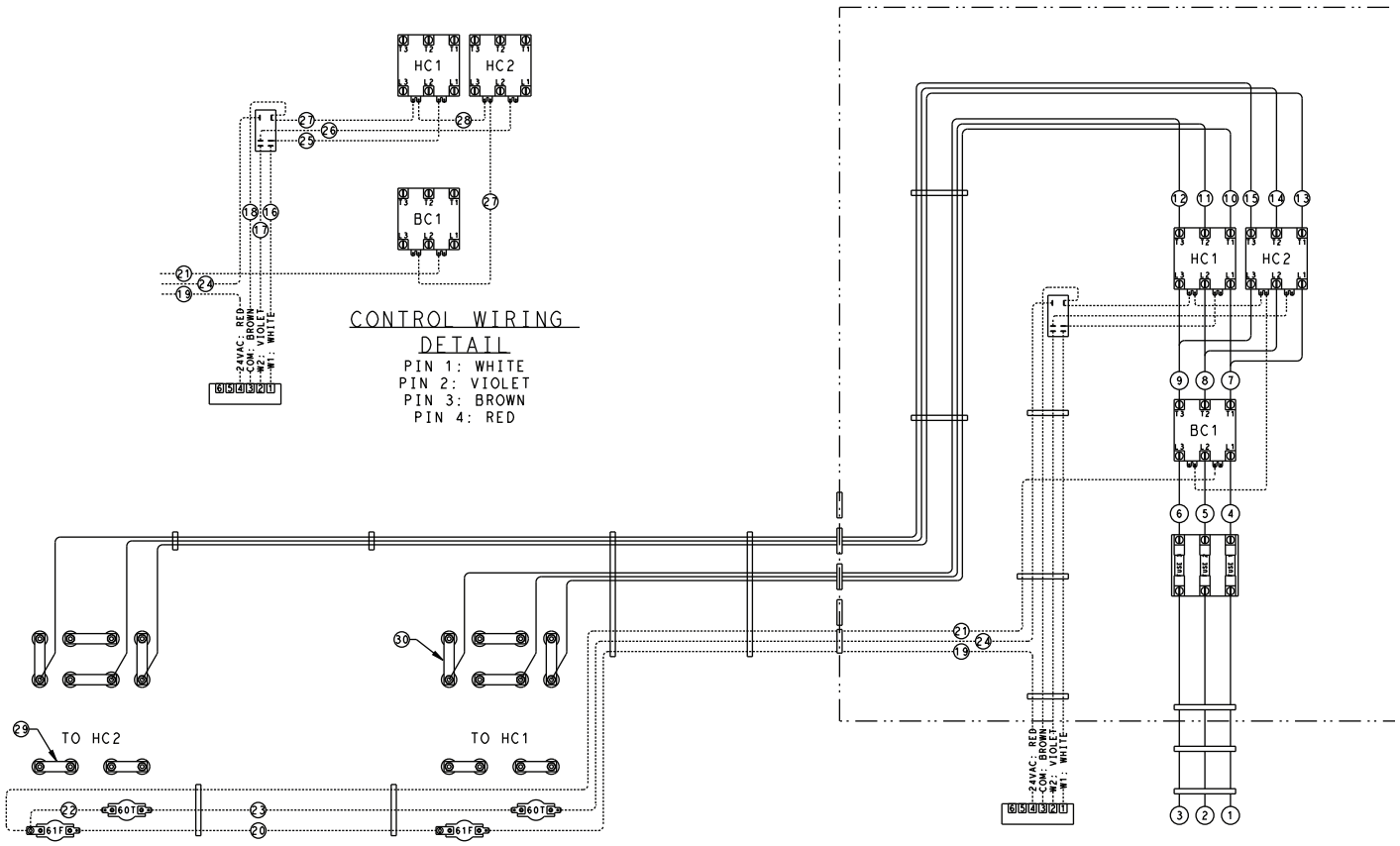

DWG. No. 50HE004118

NOTE(S):

1. Line voltage heater circuit wires to be stranded 14 gauge min with 2/64 in. thick thermoplastic insulation rated at 105°C and 600 volts.
2. Low voltage control circuit wires to be stranded 18 gauge with 2/64 in. thick thermoplastic insulation rated at 105°C and 600 volts.
3. Reference Backer wiring accessory P/N 052-490694-61 for item numbers.

Fig. 12 — Typical Control Wiring Heater Accessory CRHEATER457A00 (480V, 3-Phase, Nominal kW 25.0, 2-Step, 60 Hz, Vertical)

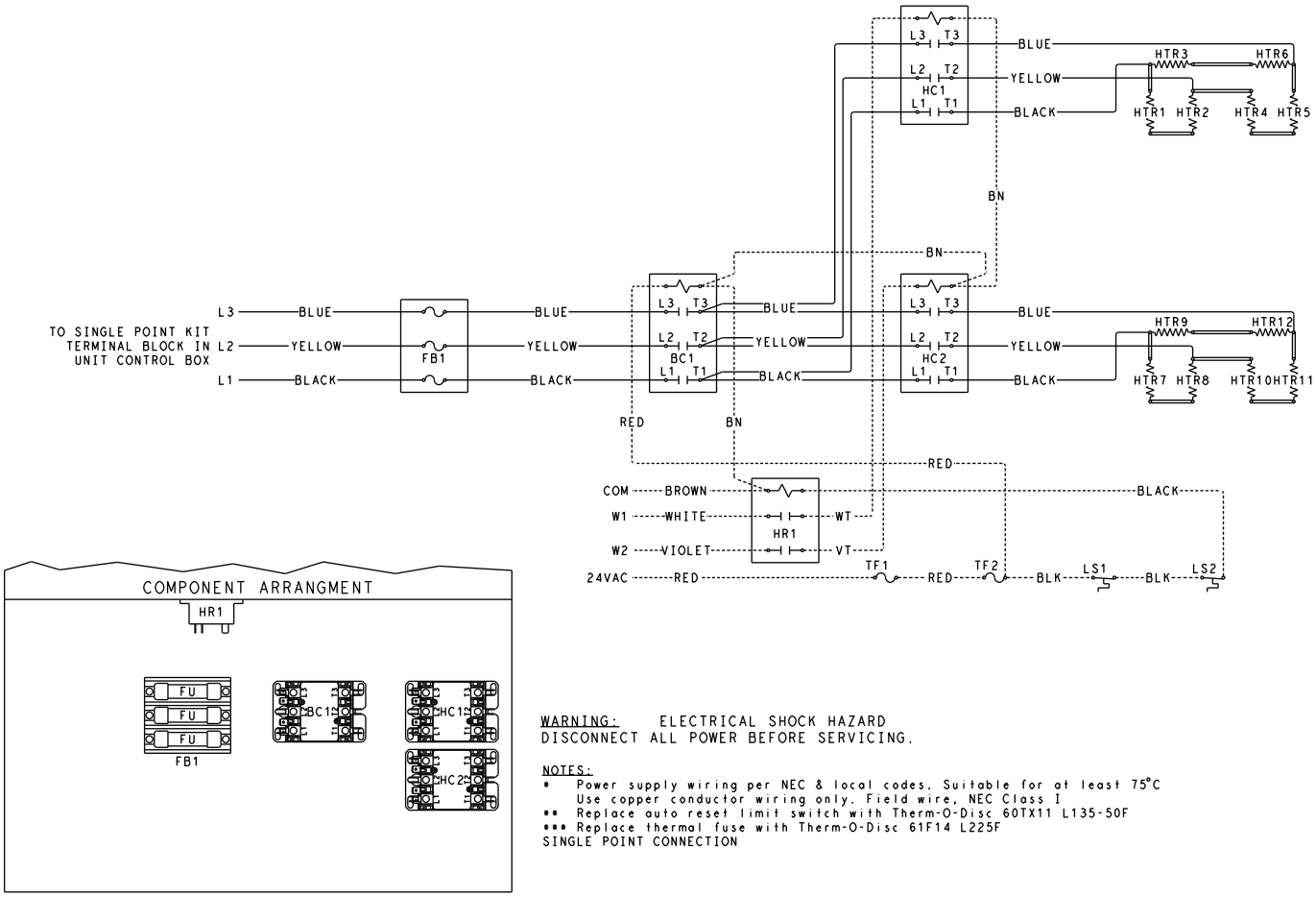

DWG. No. 50HE004118

LEGEND

BC — Backup Contactor
FB — Fuse Block
FU — Fuse
HTR — Heater
HC — Heater Contactor
HR — Heater Relay
LS — Limit Switch
TF — Thermal Fuse

Fig. 12 — Typical Control Wiring Heater Accessory CRHEATER457A00 (480V, 3-Phase, Nominal kW 25.0, 2-Step, 60 Hz, Vertical) (cont)

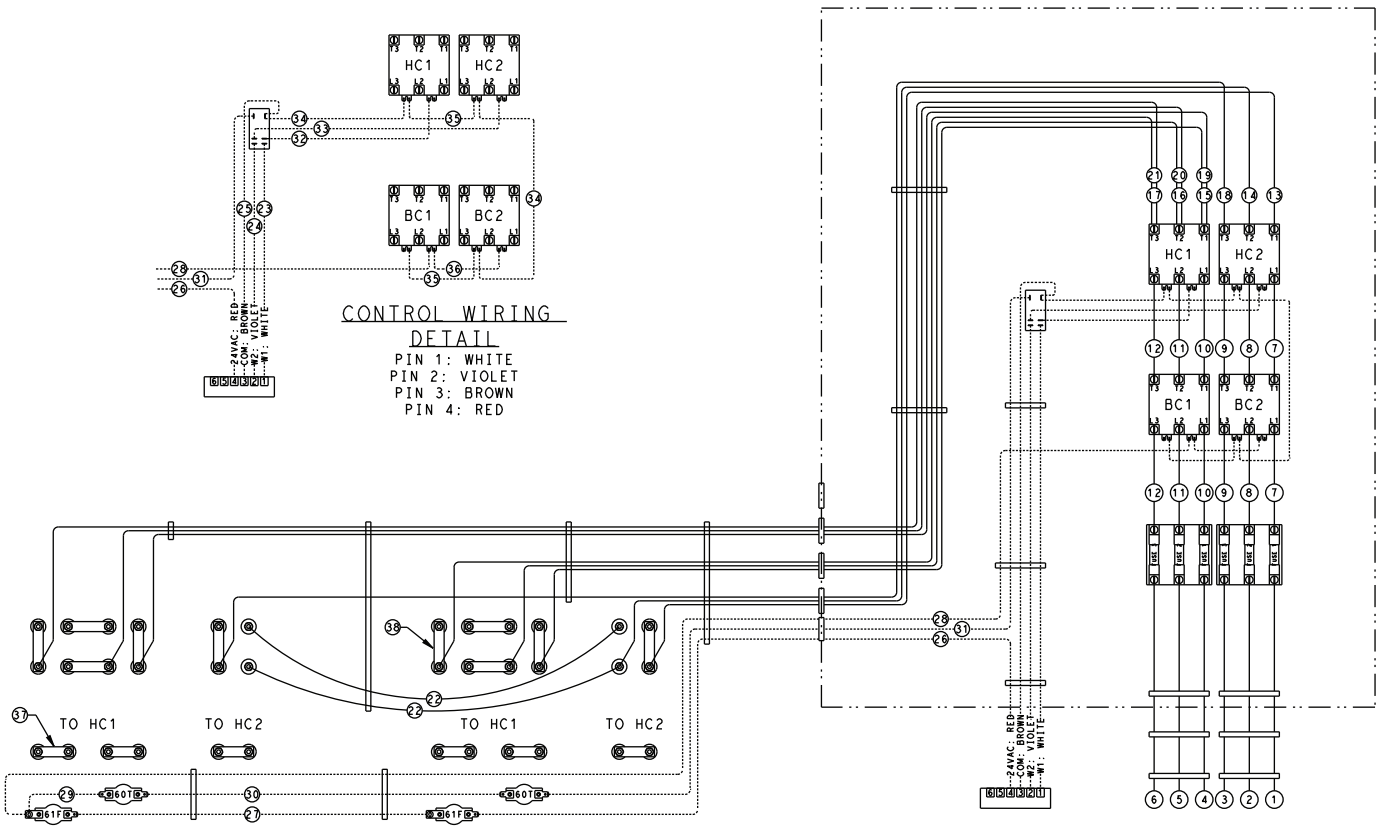

DWG. No. 50HE004119

NOTE(S):

1. Line voltage heater circuit wires to be stranded 14 gauge min with 2/64 in. thick thermoplastic insulation rated at 105°C and 600 volts.
2. Low voltage control circuit wires to be stranded 18 gauge with 2/64 in. thick thermoplastic insulation rated at 105°C and 600 volts.
3. Reference Backer wiring accessory P/N 052-490694-61 for item numbers.

Fig. 13 — Typical Control Wiring Heater Accessory CRHEATER458A00 (480V, 3-Phase, Nominal kW 50.0, 2-Step, 60 Hz, Vertical)

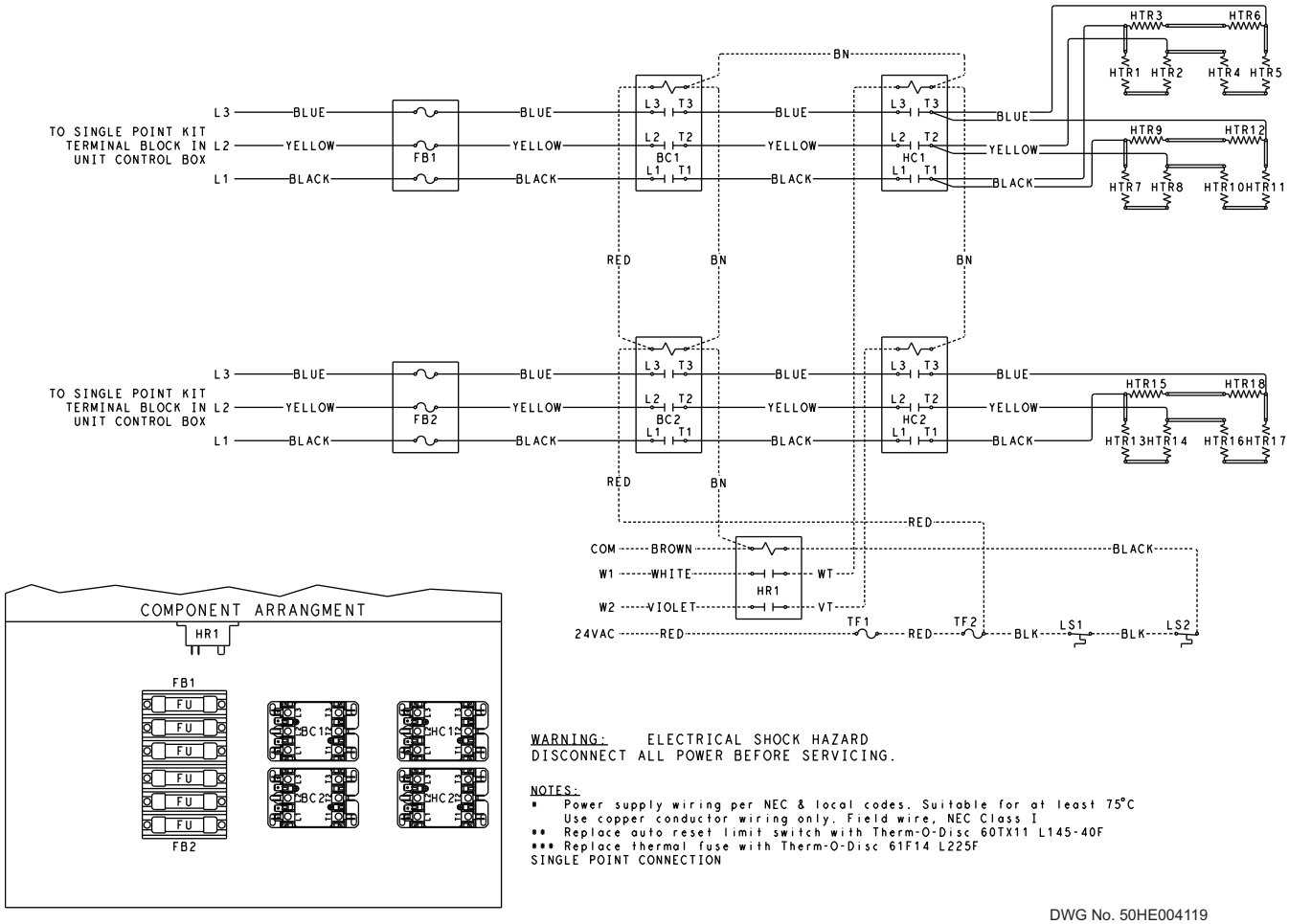

LEGEND

BC — Backup Contactor
FB — Fuse Block
FU — Fuse
HTR — Heater
HC — Heater Contactor
HR — Heater Relay
LS — Limit Switch
TF — Thermal Fuse

Fig. 13 — Typical Control Wiring Heater Accessory CRHEATER458A00 (480V, 3-Phase, Nominal kW 50.0, 2-Step, 60 Hz, Vertical) (cont)

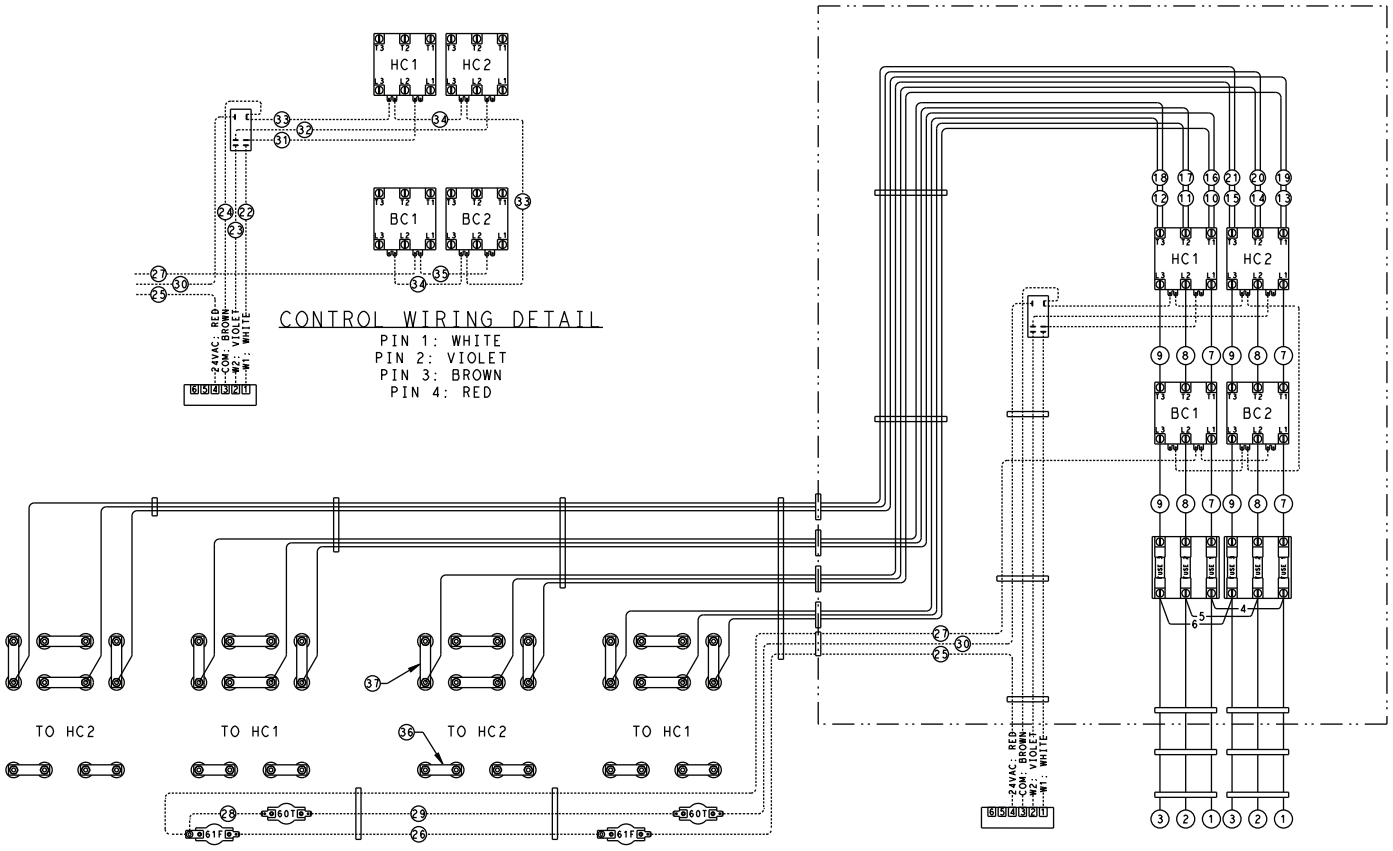

DWG No. 50HE004120

NOTE(S):

1. Line voltage heater circuit wires to be stranded 14 gauge min with 2/64 in. thick thermoplastic insulation rated at 105°C and 600 volts.
2. Low voltage control circuit wires to be stranded 18 gauge with 2/64 in. thick thermoplastic insulation rated at 105°C and 600 volts.
3. Reference Backer wiring accessory P/N 052-490694-61 for item numbers.

Fig. 14 — Typical Control Wiring Heater Accessory CRHEATER459A00 (480V, 3-Phase, Nominal kW 75.0, 2-Step, 60 Hz, Vertical)

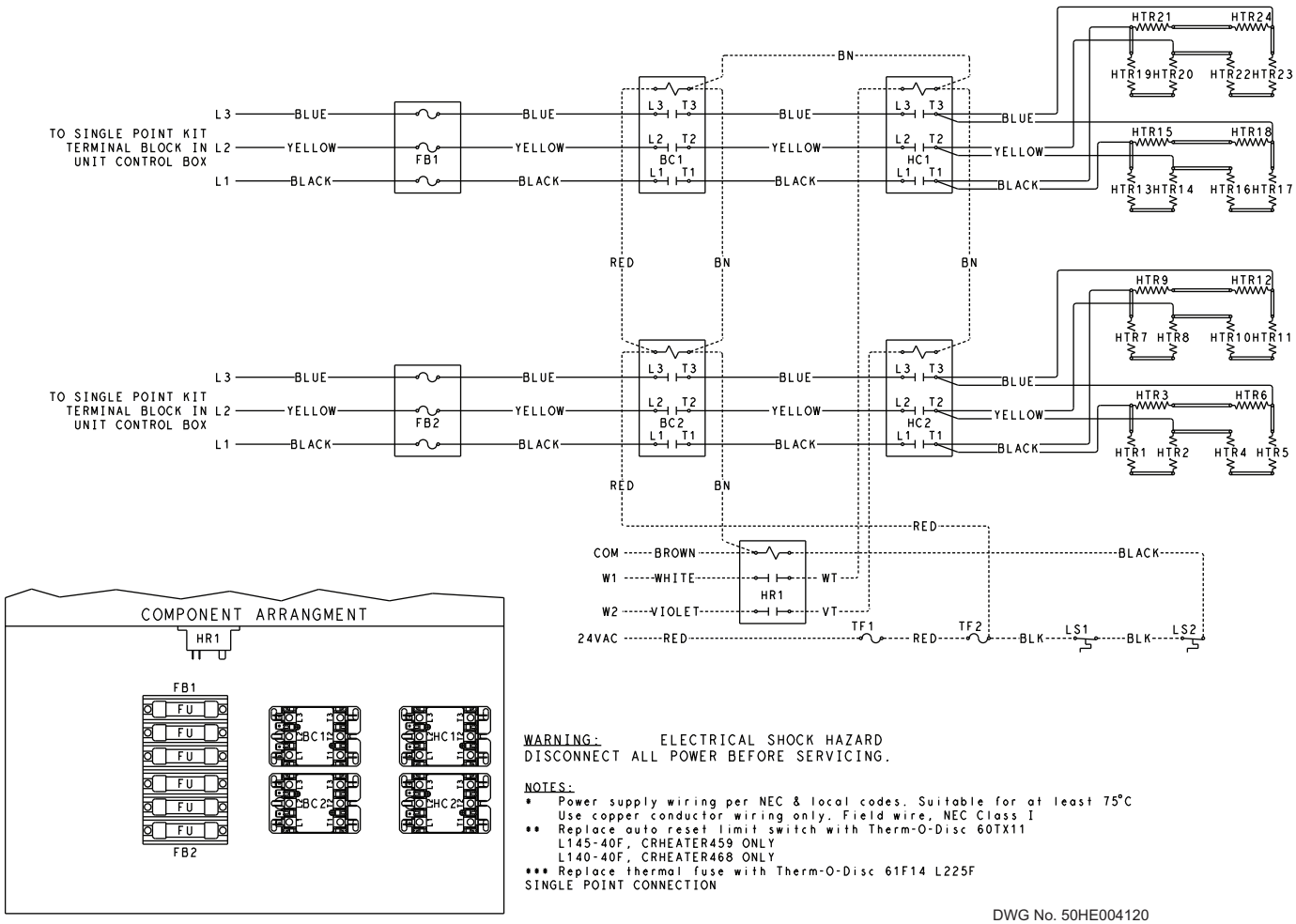

LEGEND

BC — Backup Contactor
FB — Fuse Block
FU — Fuse
HTR — Heater
HC — Heater Contactor
HR — Heater Relay
LS — Limit Switch
TF — Thermal Fuse

Fig. 14 — Typical Control Wiring Heater Accessory CRHEATER459A00 (480V, 3-Phase, Nominal kW 75.0, 2-Step, 60 Hz, Vertical) (cont)

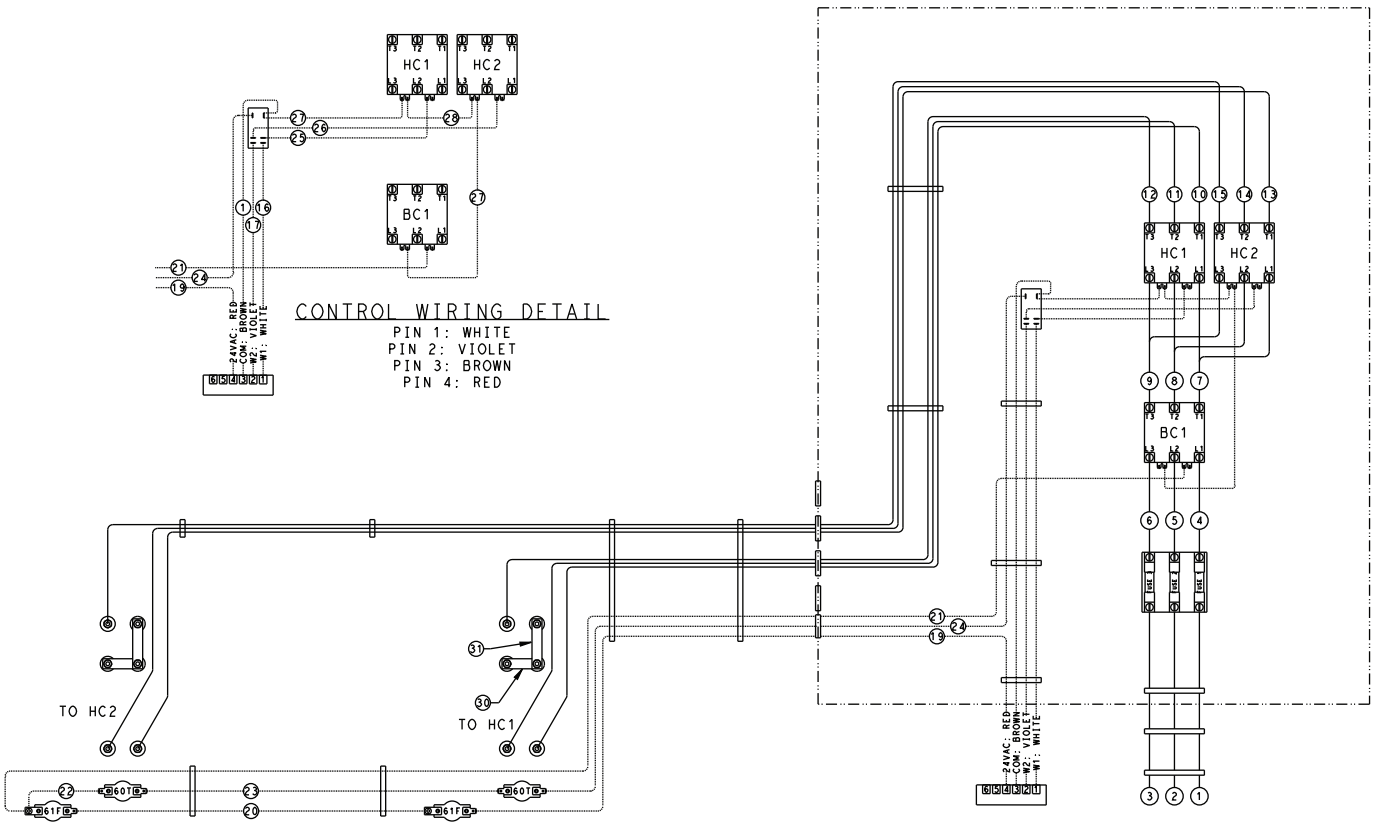

DWG No. 50HE004121

NOTE(S):

1. Line voltage heater circuit wires to be stranded 14 gauge min with 2/64 in. thick thermoplastic insulation rated at 105°C and 600 volts.
2. Low voltage control circuit wires to be stranded 18 gauge with 2/64 in. thick thermoplastic insulation rated at 105°C and 600 volts.
3. Reference Backer wiring accessory P/N 052-490694-61 for item numbers.

Fig. 15 — Typical Control Wiring Heater Accessory CRHEATER460A00 (600V, 3-Phase, Nominal kW 24.8, 2-Step, 60 Hz, Vertical)

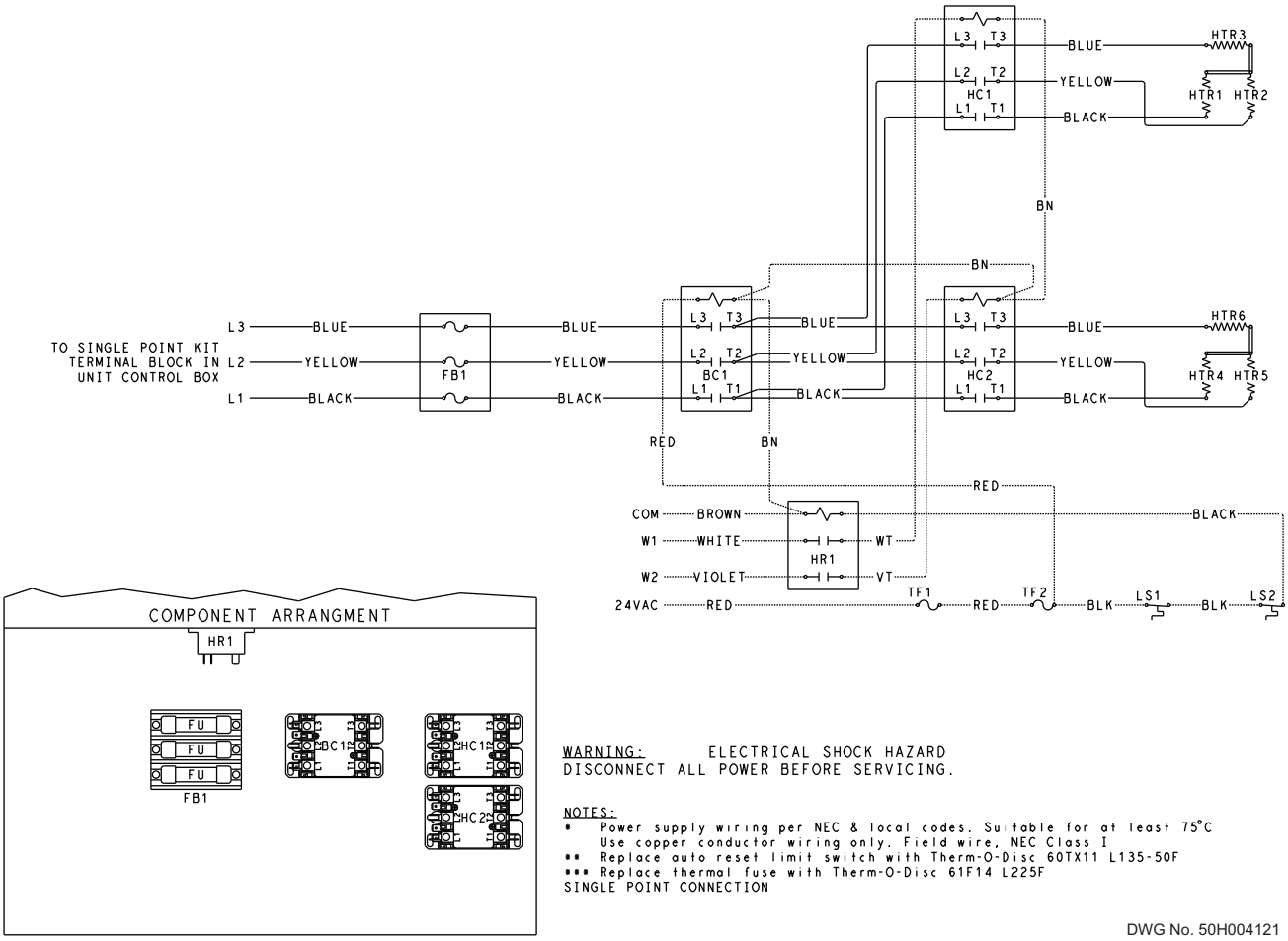

LEGEND

BC — Backup Contactor
FB — Fuse Block
FU — Fuse
HTR — Heater
HC — Heater Contactor
HR — Heater Relay
LS — Limit Switch
TF — Thermal Fuse

Fig. 15 — Typical Control Wiring Heater Accessory CRHEATER460A00 (600V, 3-Phase, Nominal kW 24.8, 2-Step, 60 Hz, Vertical) (cont)

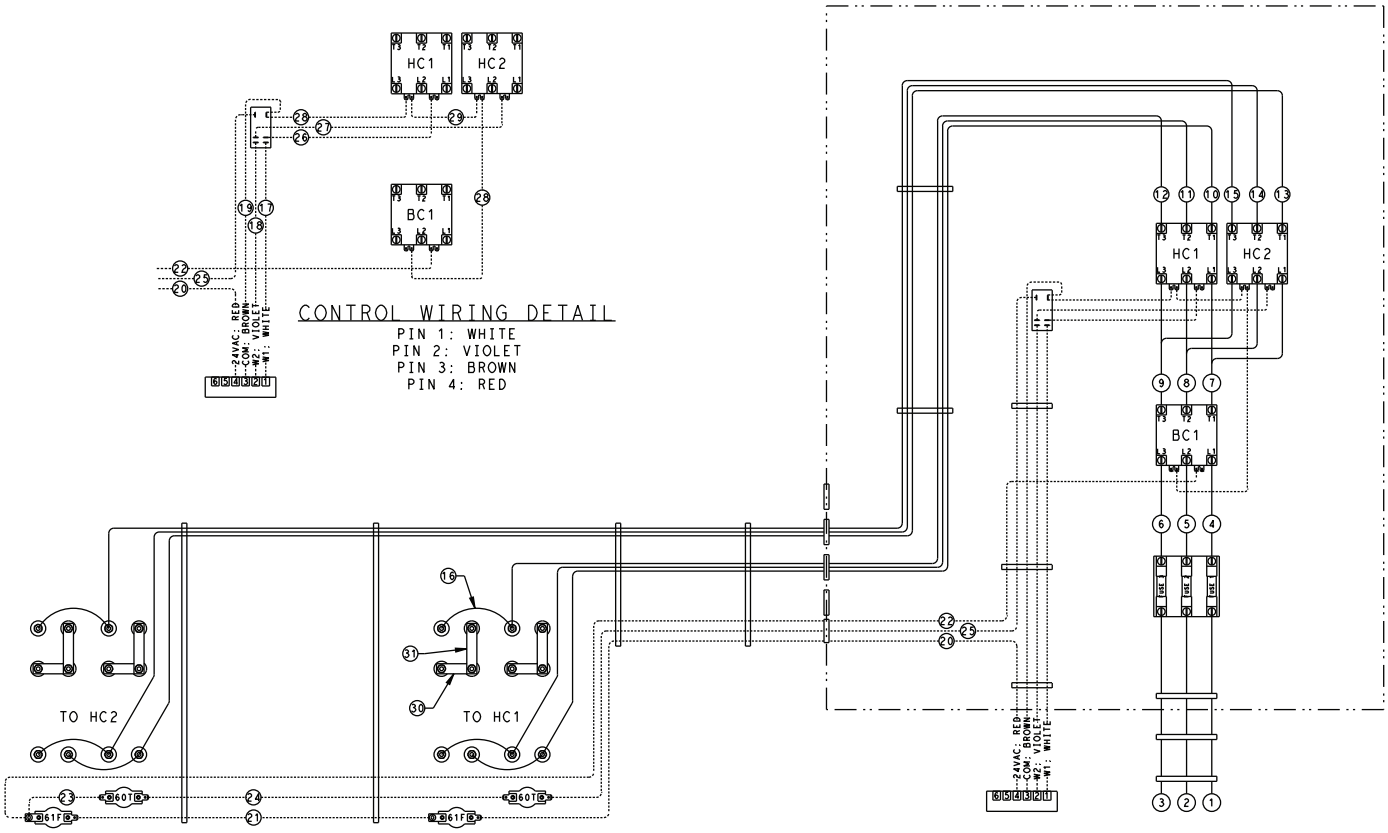

DWG No. 50HE004122

NOTE(S):

1. Line voltage heater circuit wires to be stranded 14 gauge min with 2/64 in. thick thermoplastic insulation rated at 105°C and 600 volts.
2. Low voltage control circuit wires to be stranded 18 gauge with 2/64 in. thick thermoplastic insulation rated at 105°C and 600 volts.
3. Reference Backer wiring accessory P/N 052-490694-61 for item numbers.

Fig. 16 — Typical Control Wiring Heater Accessory CRHEATER461A00 (600V, 3-Phase, Nominal kW 49.6, 2-Step, 60 Hz, Vertical)

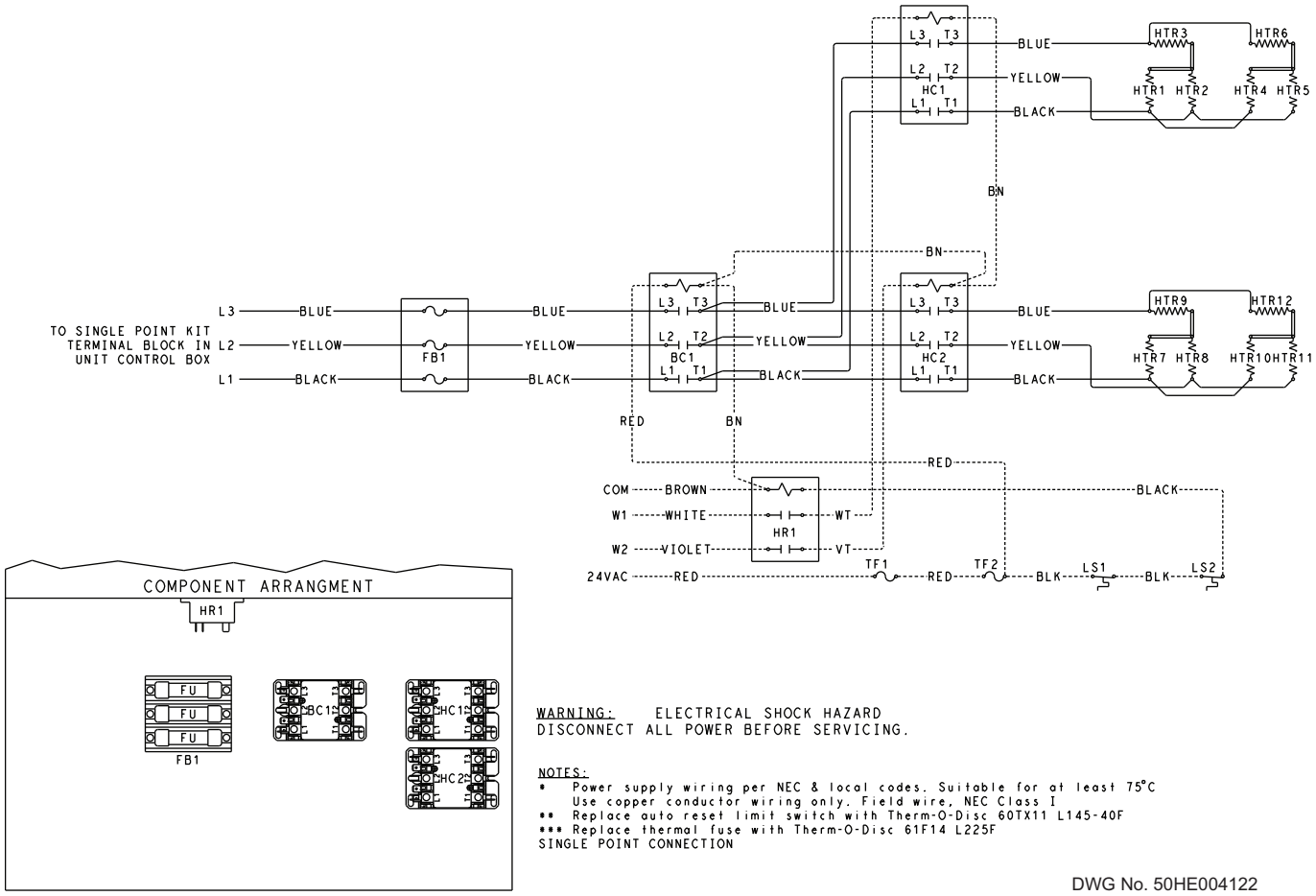

LEGEND

BC — Backup Contactor
FB — Fuse Block
FU — Fuse
HTR — Heater
HC — Heater Contactor
HR — Heater Relay
LS — Limit Switch
TF — Thermal Fuse

Fig. 16 — Typical Control Wiring Heater Accessory CRHEATER461A00 (600V, 3-Phase, Nominal kW 49.6, 2-Step, 60 Hz, Vertical) (cont)

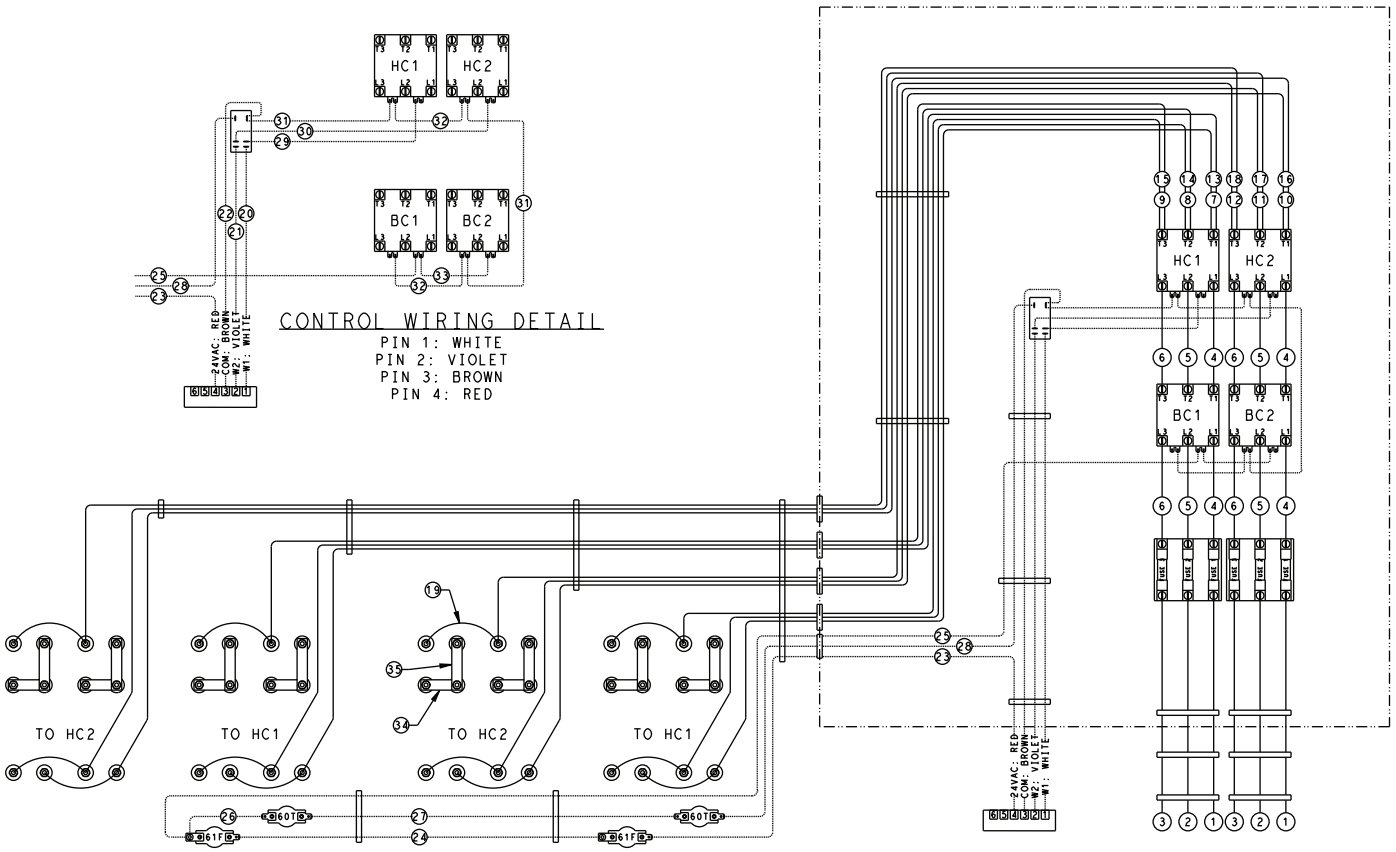

DWG No. 50HE004123

NOTE(S):

1. Line voltage heater circuit wires to be stranded 14 gauge min with 2/64 in. thick thermoplastic insulation rated at 105°C and 600 volts.
2. Low voltage control circuit wires to be stranded 18 gauge with 2/64 in. thick thermoplastic insulation rated at 105°C and 600 volts.
3. Reference Backer wiring accessory P/N 052-490694-61 for item numbers.

Fig. 17 — Typical Control Wiring Heater Accessory CRHEATER462A00 (600V, 3-Phase, Nominal kW 74.4, 2-Step, 60 Hz, Vertical)

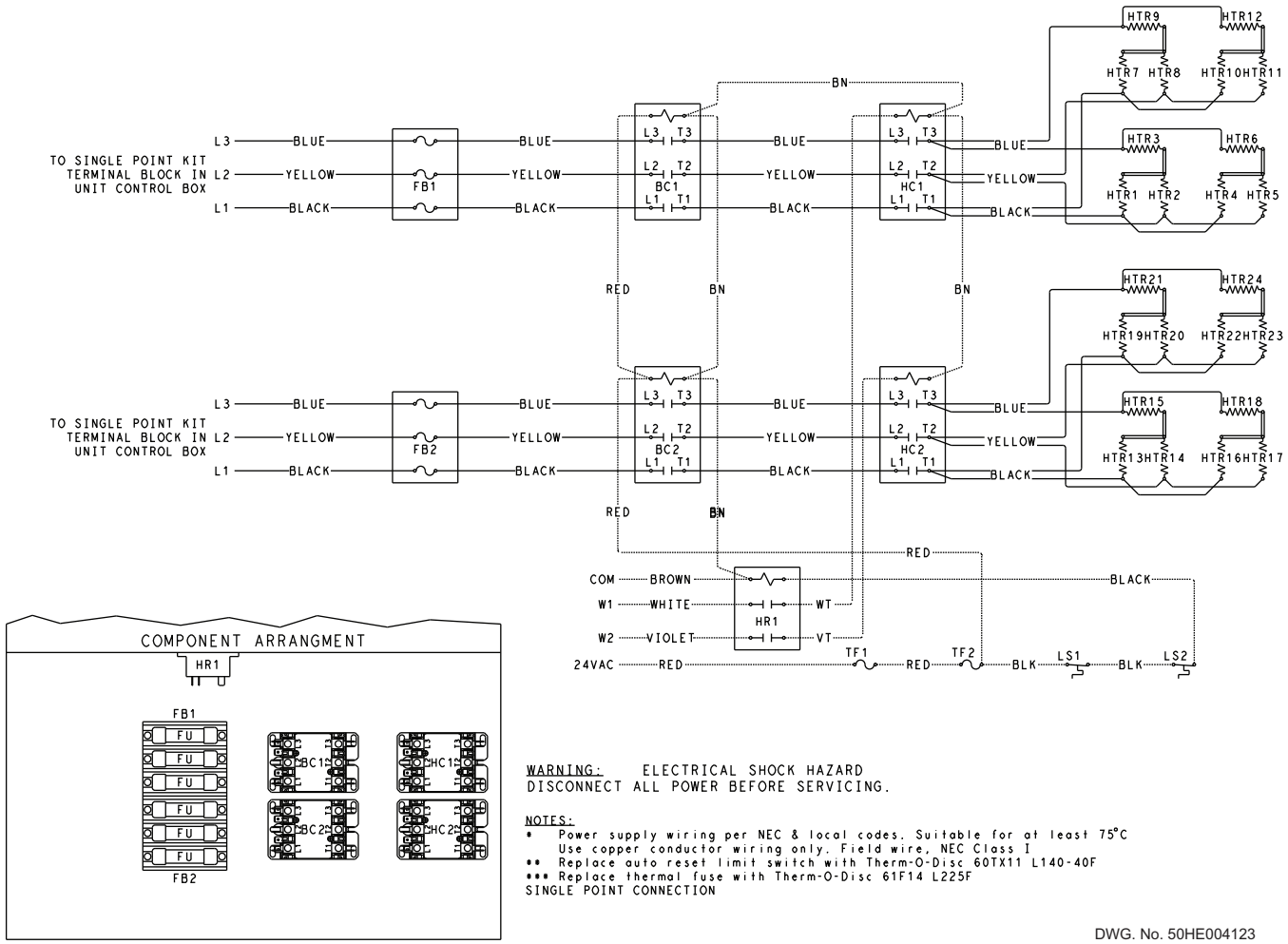

LEGEND

BC — Backup Contactor
FB — Fuse Block
FU — Fuse
HTR — Heater
HC — Heater Contactor
HR — Heater Relay
LS — Limit Switch
TF — Thermal Fuse

Fig. 17 — Typical Control Wiring Heater Accessory CRHEATER462A00 (600V, 3-Phase, Nominal kW 74.4, 2-Step, 60 Hz, Vertical) (cont)

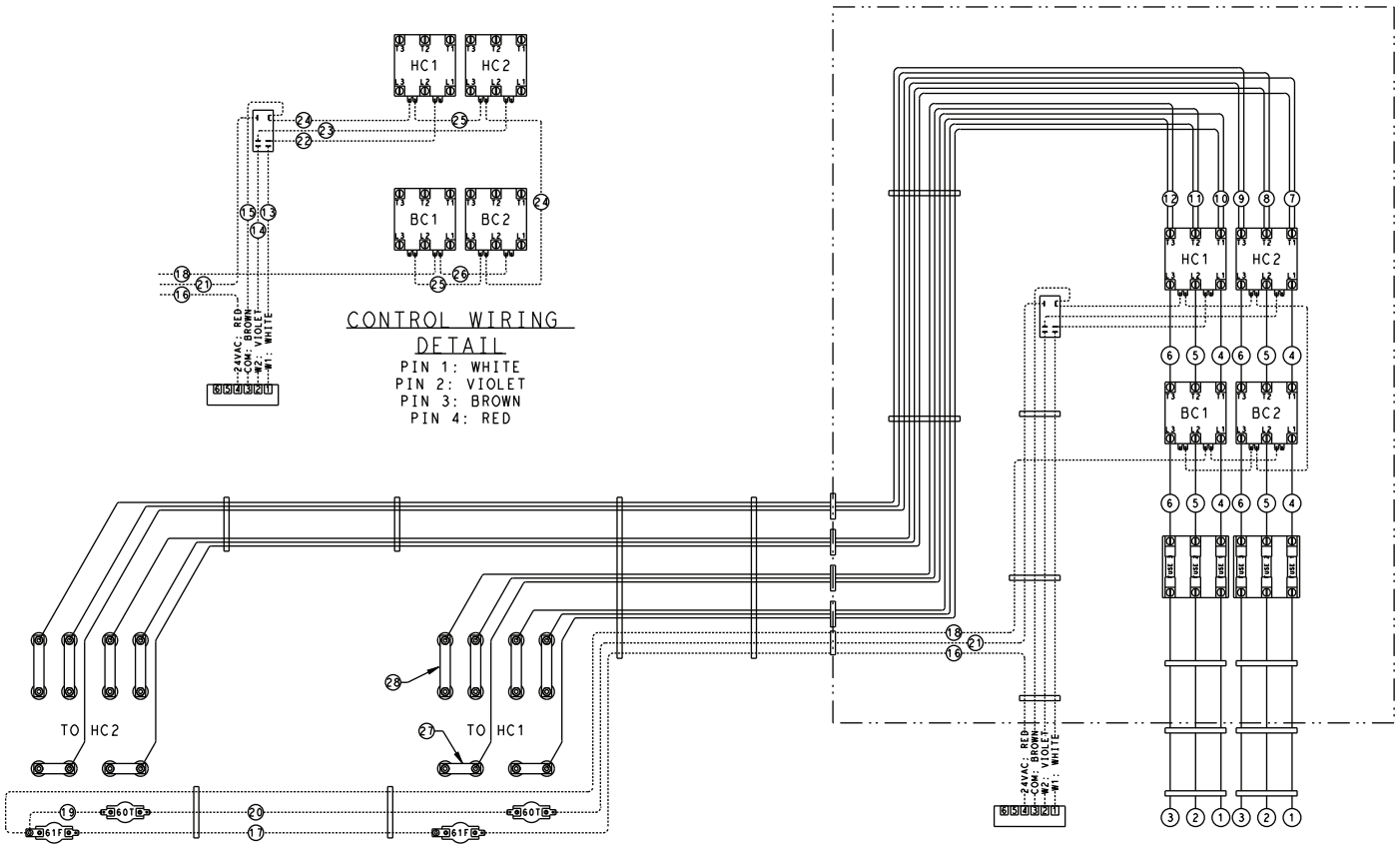

DWG.No 50HE004124

NOTE(S):

1. Line voltage heater circuit wires to be stranded 14 gauge min with 2/64 in. thick thermoplastic insulation rated at 105°C and 600 volts.
2. Low voltage control circuit wires to be stranded 18 gauge with 2/64 in. thick thermoplastic insulation rated at 105°C and 600 volts.
3. Reference Backer wiring accessory P/N 052-490694-61 for item numbers.

Fig. 18 — Typical Control Wiring Heater Accessory CRHEATER463A00 (208/240V, 3-Phase, Nominal kW 25.0, 2-Step, 60 Hz, Horizontal)

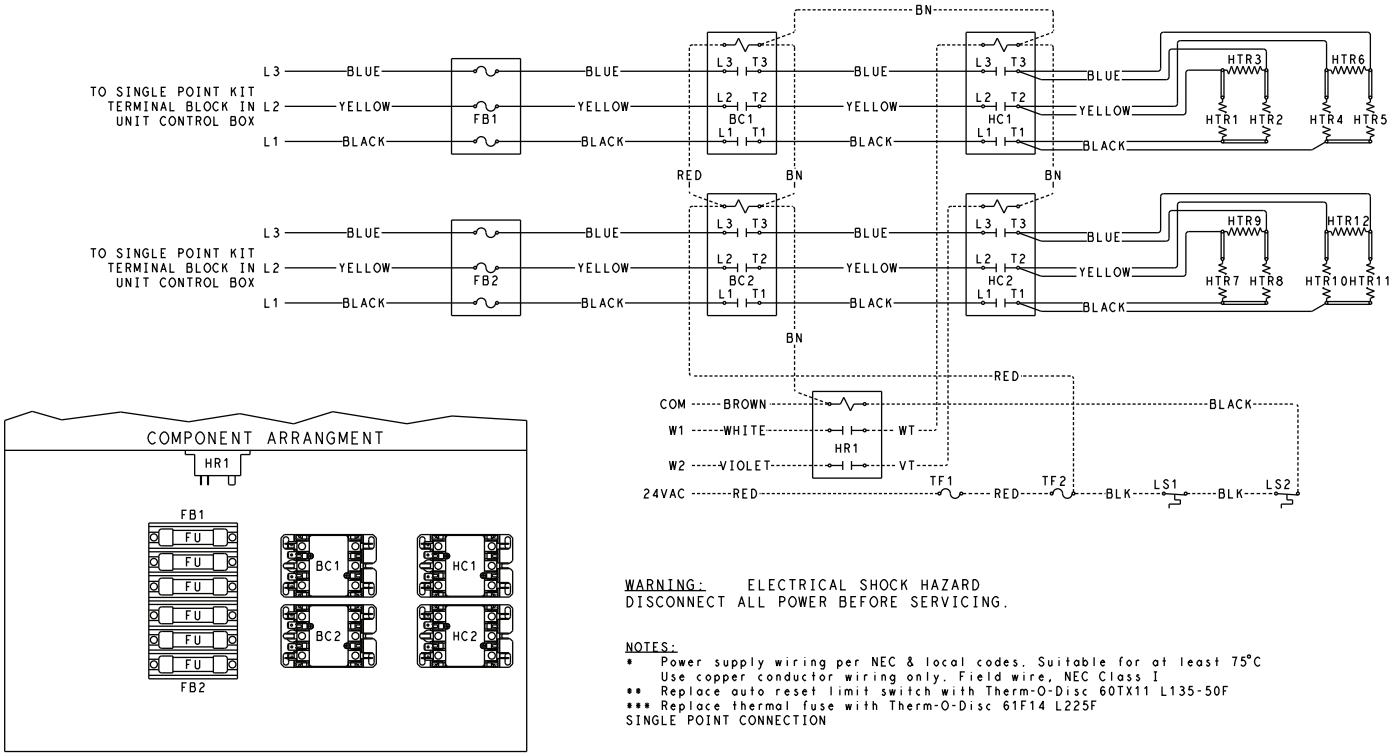

LEGEND

BC — Backup Contactor
FB — Fuse Block
FU — Fuse
HTR — Heater
HC — Heater Contactor
HR — Heater Relay
LS — Limit Switch
TF — Thermal Fuse

Fig. 18 — Typical Control Wiring Heater Accessory CRHEATER463A00 (208/240V, 3-Phase, Nominal kW 25.0, 2-Step, 60 Hz, Horizontal) (cont)

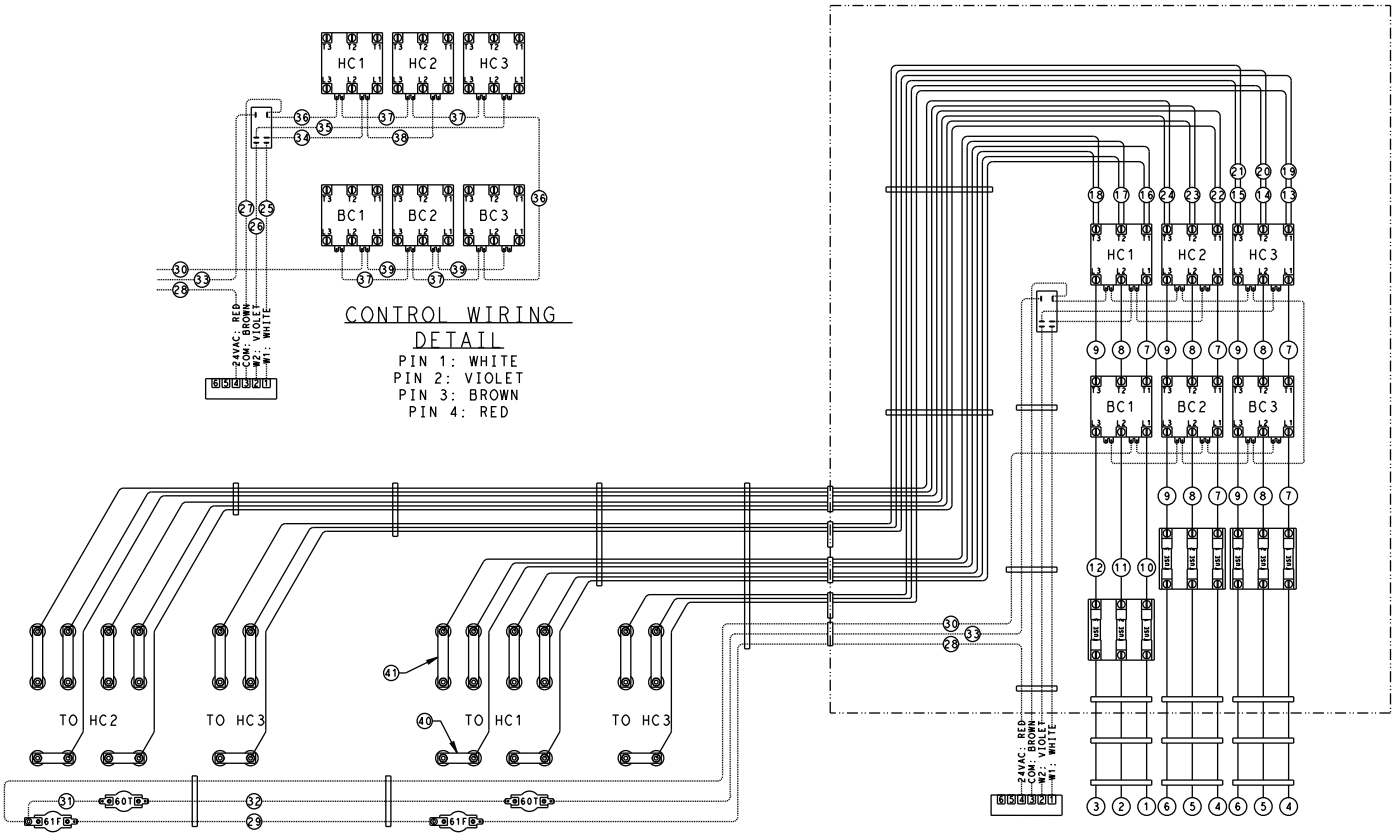

Dwg No. 50HE004125

NOTE(S):

1. Line voltage heater circuit wires to be stranded 14 gauge min with 2/64 in. thick thermoplastic insulation rated at 105°C and 600 volts.
2. Low voltage control circuit wires to be stranded 18 gauge with 2/64 in. thick thermoplastic insulation rated at 105°C and 600 volts.
3. Reference Backer wiring accessory P/N 052-490694-61 for item numbers.

Fig. 19 — Typical Control Wiring Heater Accessory CRHEATER464A00 (208/240V, 3-Phase, Nominal kW 50.0, 2-Step, 60Hz, Horizontal)

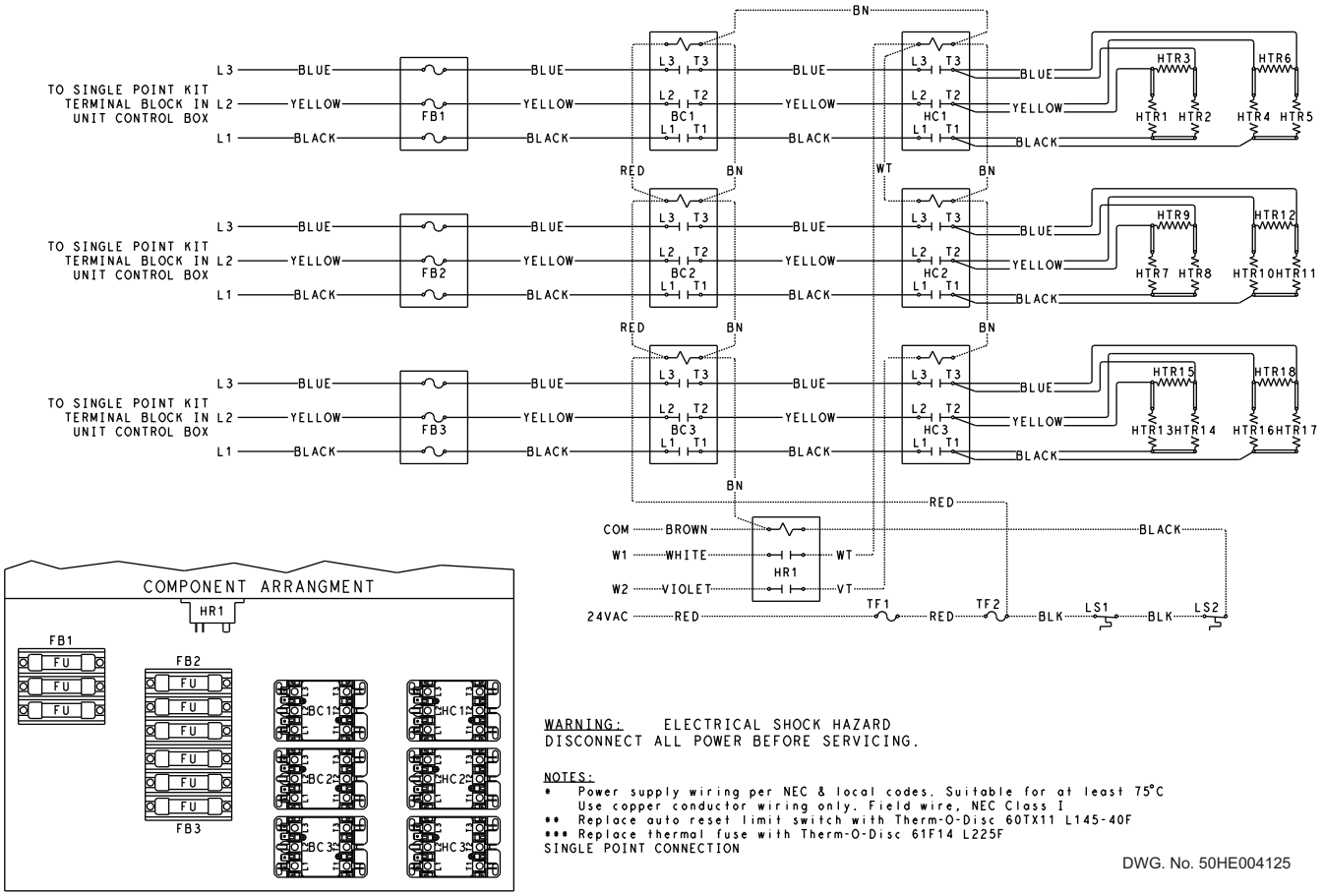

LEGEND

BC — Backup Contactor
FB — Fuse Block
FU — Fuse
HTR — Heater
HC — Heater Contactor
HR — Heater Relay
LS — Limit Switch
TF — Thermal Fuse

Fig. 19 — Typical Control Wiring Heater Accessory CRHEATER464A00 (208/240V, 3-Phase, Nominal kW 50.0, 2-Step, 60Hz, Horizontal) (cont)

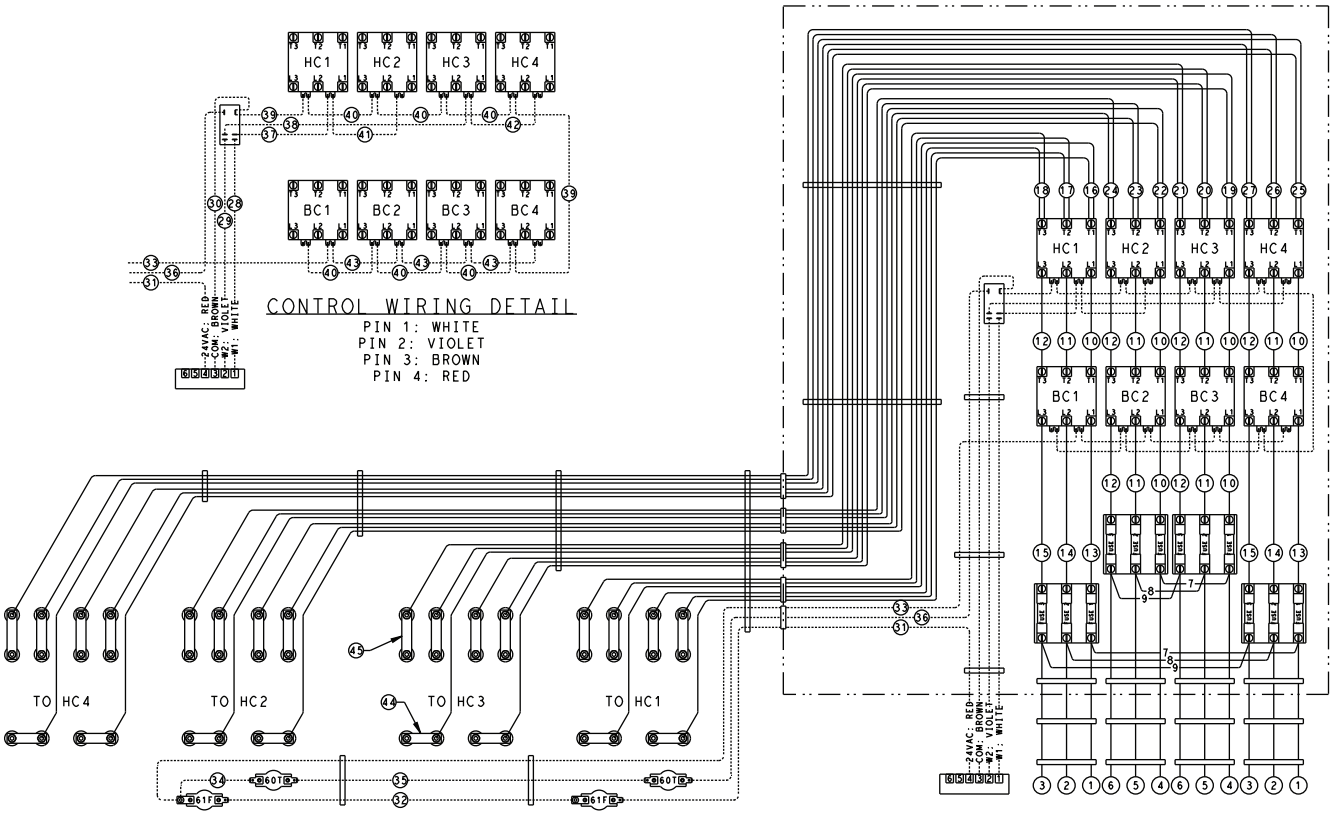

DWG. No. 50HE004126

NOTE(S):

1. Line voltage heater circuit wires to be stranded 14 gauge min with 2/64 in. thick thermoplastic insulation rated at 105°C and 600 volts.
2. Low voltage control circuit wires to be stranded 18 gauge with 2/64 in. thick thermoplastic insulation rated at 105°C and 600 volts.
3. Reference Backer wiring accessory P/N 052-490694-61 for item numbers.

Fig. 20 — Typical Control Wiring Heater Accessory CRHEATER465A00 (208/240V, 3-Phase, Nominal kW 75.0, 2-Step, 60 Hz, Horizontal)

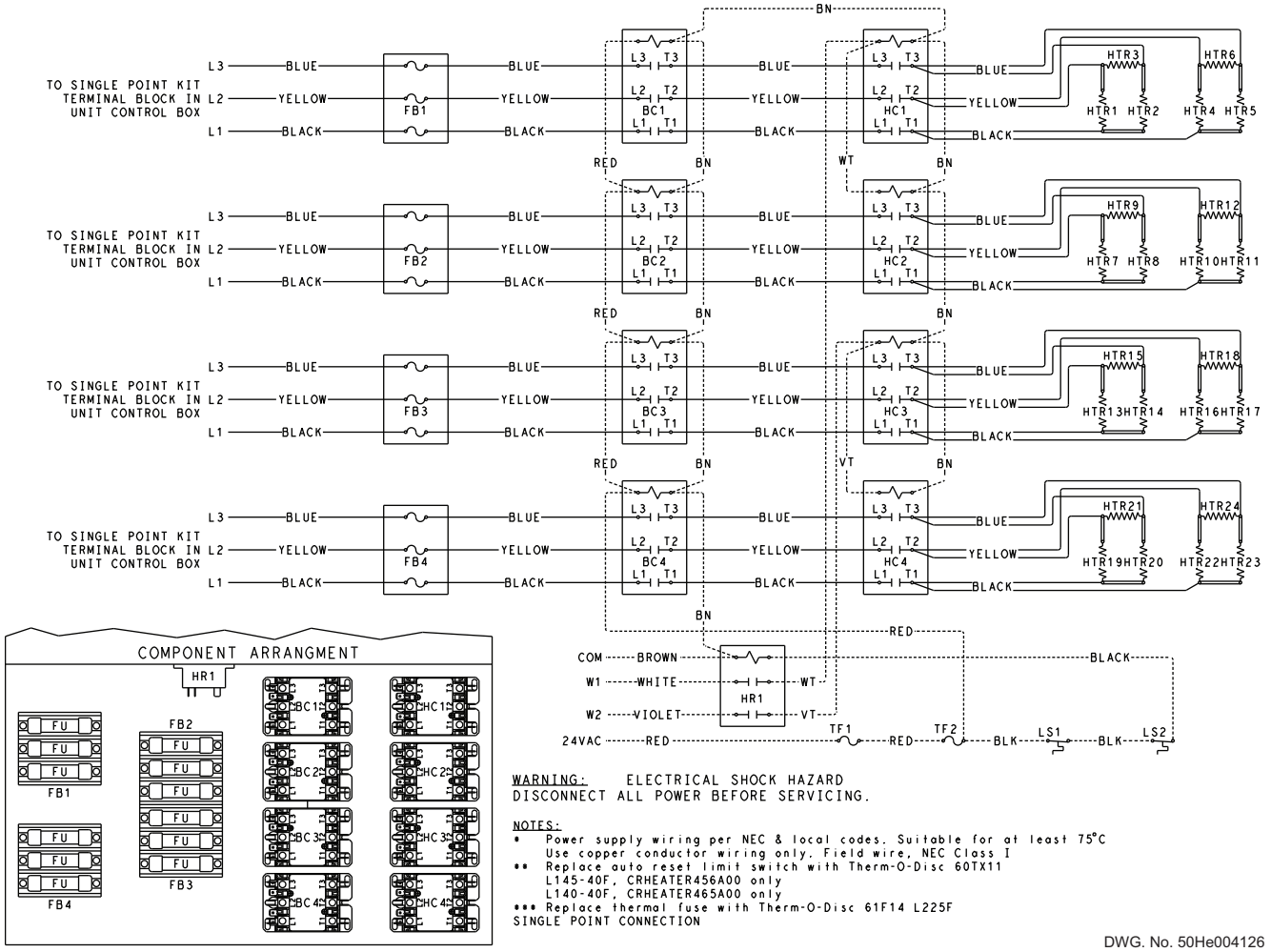

LEGEND

BC — Backup Contactor
FB — Fuse Block
FU — Fuse
HTR — Heater
HC — Heater Contactor
HR — Heater Relay
LS — Limit Switch
TF — Thermal Fuse

Fig. 20 — Typical Control Wiring Heater Accessory CRHEATER465A00 (208/240V, 3-Phase, Nominal kW 75.0, 2-Step, 60 Hz, Horizontal) (cont)

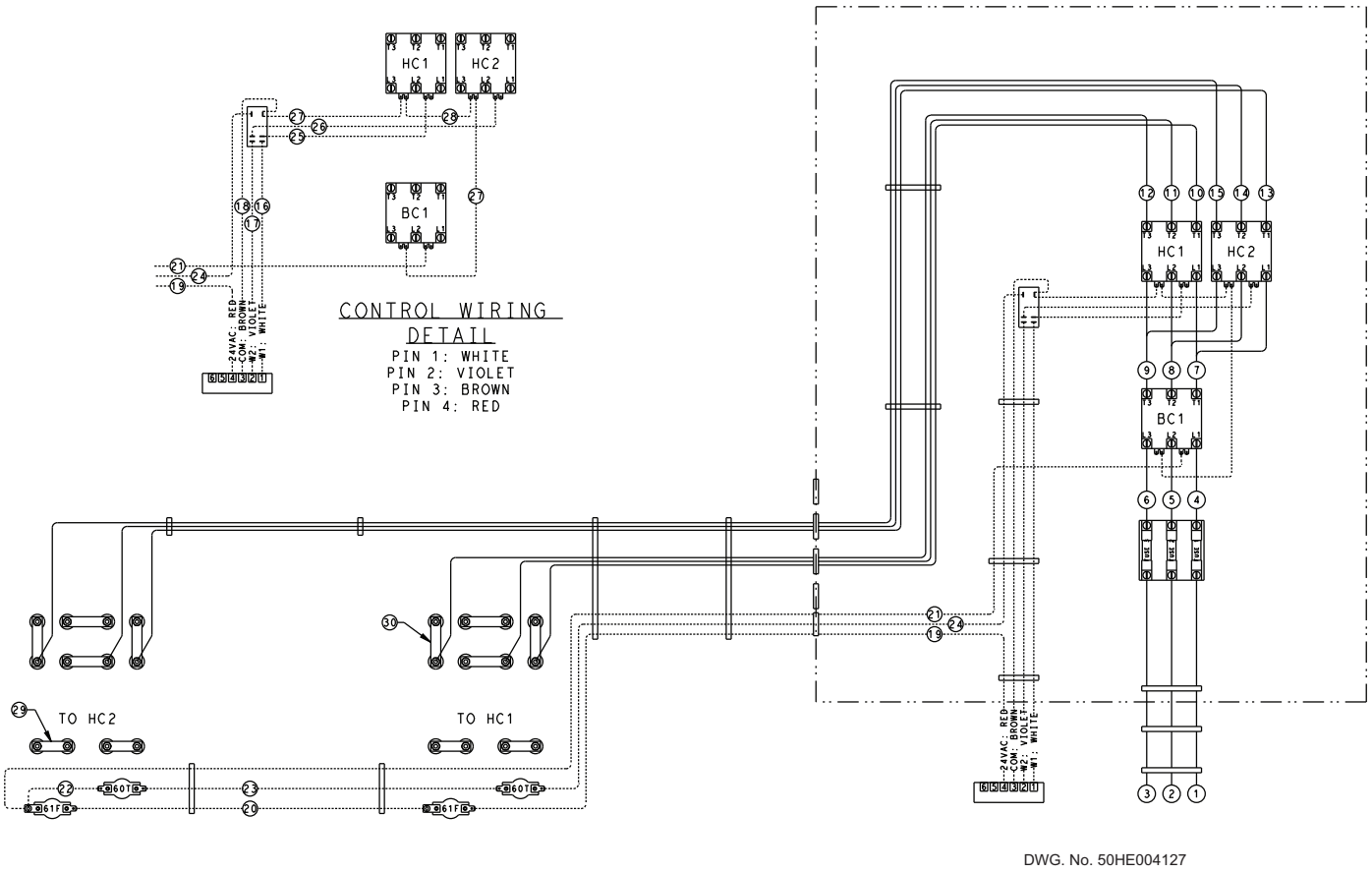

NOTE(S):

1. Line voltage heater circuit wires to be stranded 14 gauge min with 2/64 in. thick thermoplastic insulation rated at 105°C and 600 volts.
2. Low voltage control circuit wires to be stranded 18 gauge with 2/64 in. thick thermoplastic insulation rated at 105°C and 600 volts.
3. Reference Backer wiring accessory P/N 052-490694-61 for item numbers.

Fig. 21 — Typical Control Wiring Heater Accessory CRHEATER466A00 (480V, 3-Phase, Nominal kW 25.0, 2-Step, 60 Hz, Horizontal)

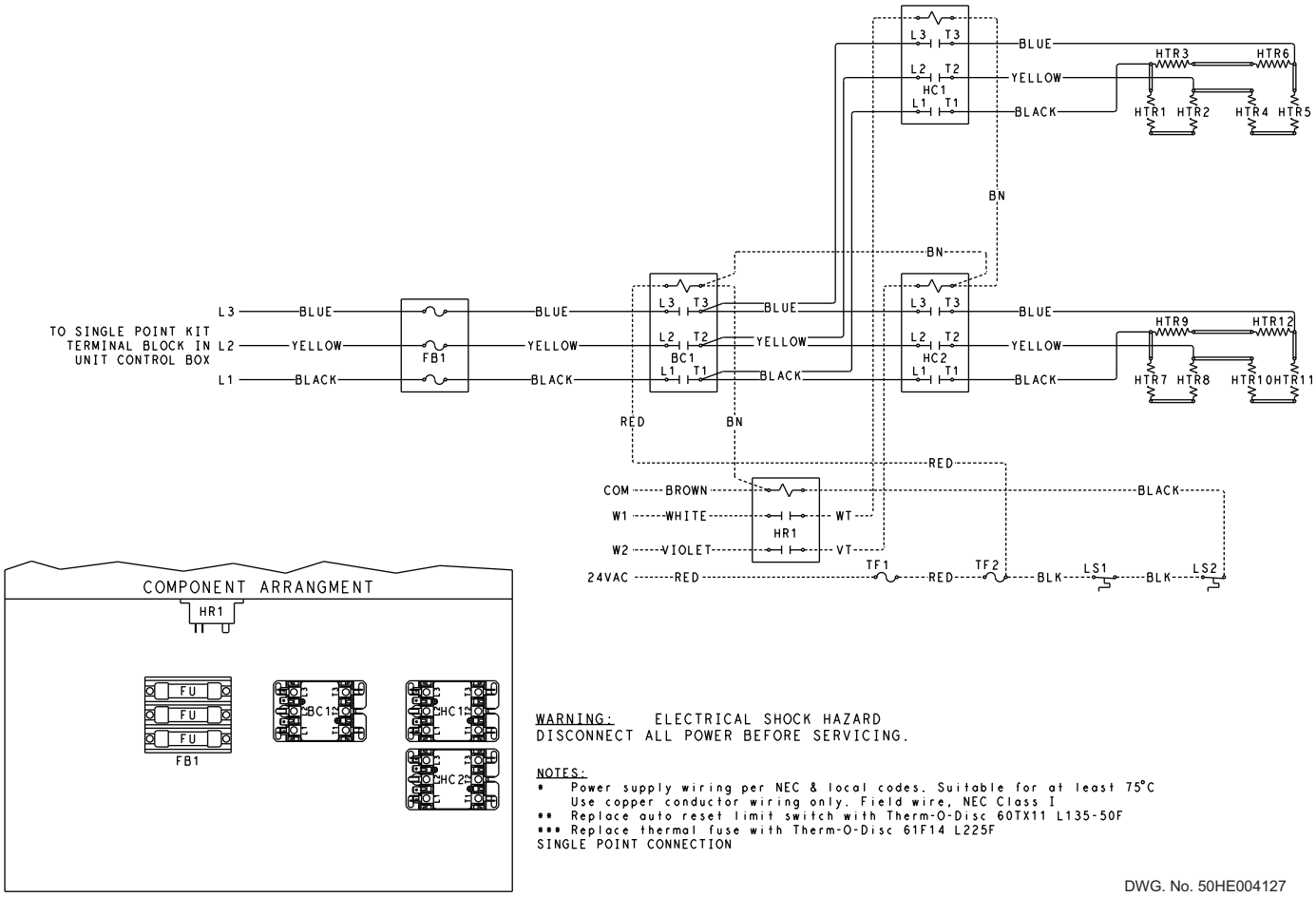

LEGEND

BC — Backup Contactor
FB — Fuse Block
FU — Fuse
HTR — Heater
HC — Heater Contactor
HR — Heater Relay
LS — Limit Switch
TF — Thermal Fuse

Fig. 21 — Typical Control Wiring Heater Accessory CRHEATER466A00 (480V, 3-Phase, Nominal kW 25.0, 2-Step, 60 Hz, Horizontal) (cont)

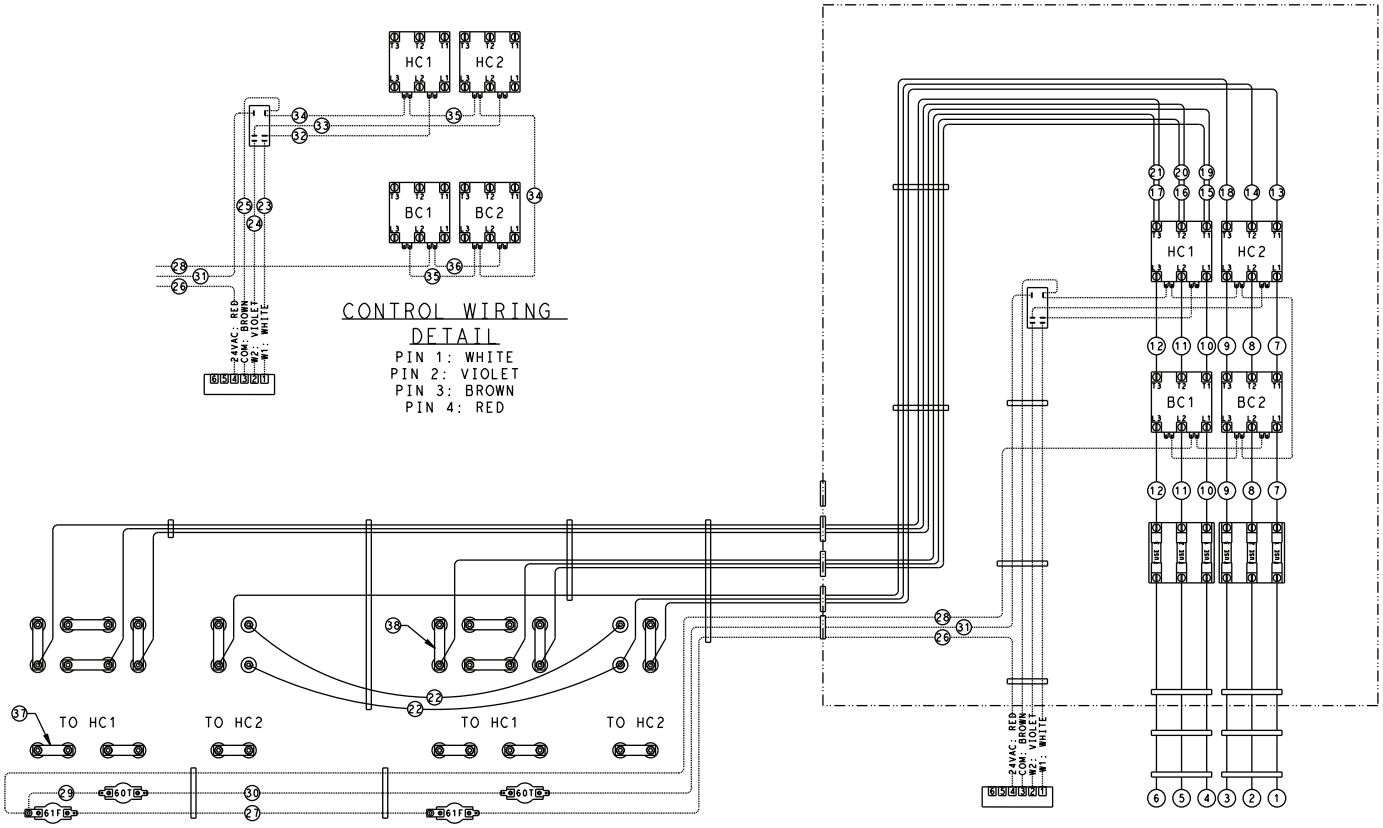

DWG. No. 50HE004128

NOTE(S):

1. Line voltage heater circuit wires to be stranded 14 gauge min with 2/64 in. thick thermoplastic insulation rated at 105°C and 600 volts.
2. Low voltage control circuit wires to be stranded 18 gauge with 2/64 in. thick thermoplastic insulation rated at 105°C and 600 volts.
3. Reference Backer wiring accessory P/N 052-490694-61 for item numbers.

Fig. 22 — Typical Control Wiring Heater Accessory CRHEATER467A00 (480V, 3-Phase, Nominal kW 50.0, 2-Step, 60 Hz, Horizontal)

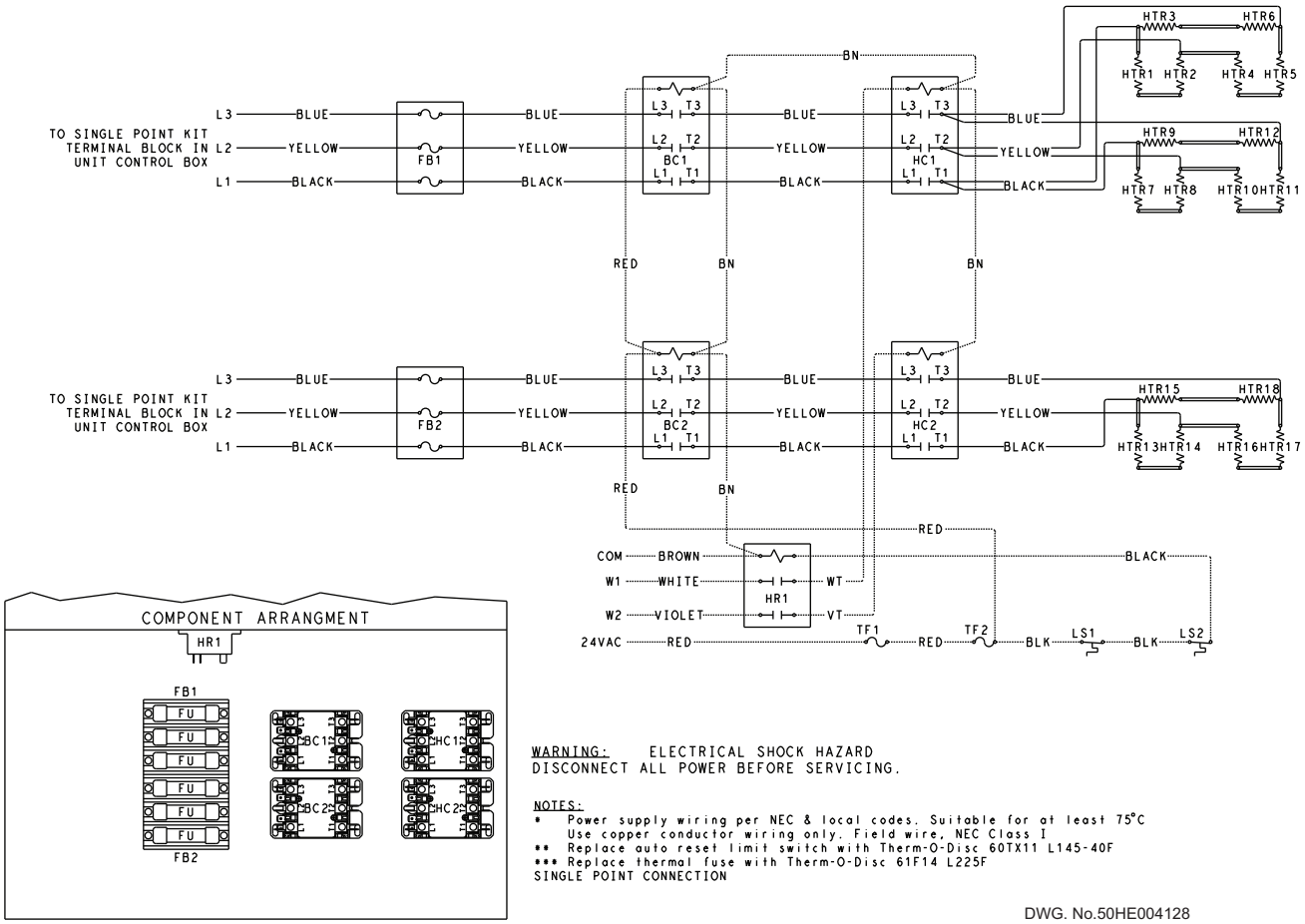

LEGEND

BC — Backup Contactor
FB — Fuse Block
FU — Fuse
HTR — Heater
HC — Heater Contactor
HR — Heater Relay
LS — Limit Switch
TF — Thermal Fuse

Fig. 22 — Typical Control Wiring Heater Accessory CRHEATER467A00 (480V, 3-Phase, Nominal kW 50.0, 2-Step, 60 Hz, Horizontal) (cont)

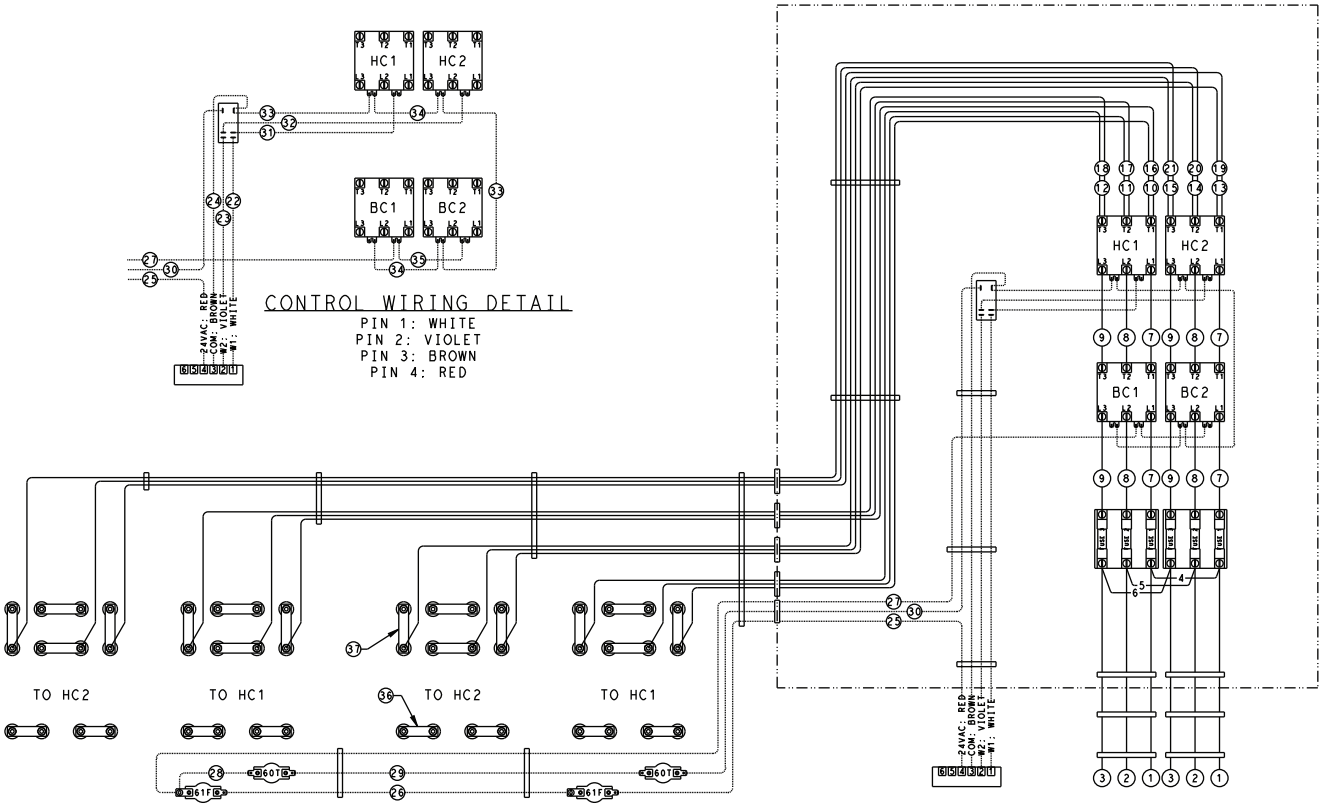

NOTE(S):

1. Line voltage heater circuit wires to be stranded 14 gauge min with 2/64 in. thick thermoplastic insulation rated at 105°C and 600 volts.
2. Low voltage control circuit wires to be stranded 18 gauge with 2/64 in. thick thermoplastic insulation rated at 105°C and 600 volts.
3. Reference Backer wiring accessory P/N 052-490694-61 for item numbers.

Fig. 23 — Typical Control Wiring Heater Accessory CRHEATER468A00 (480V, 3-Phase, Nominal kW 75.0, 2-Step, 60 Hz, Horizontal)

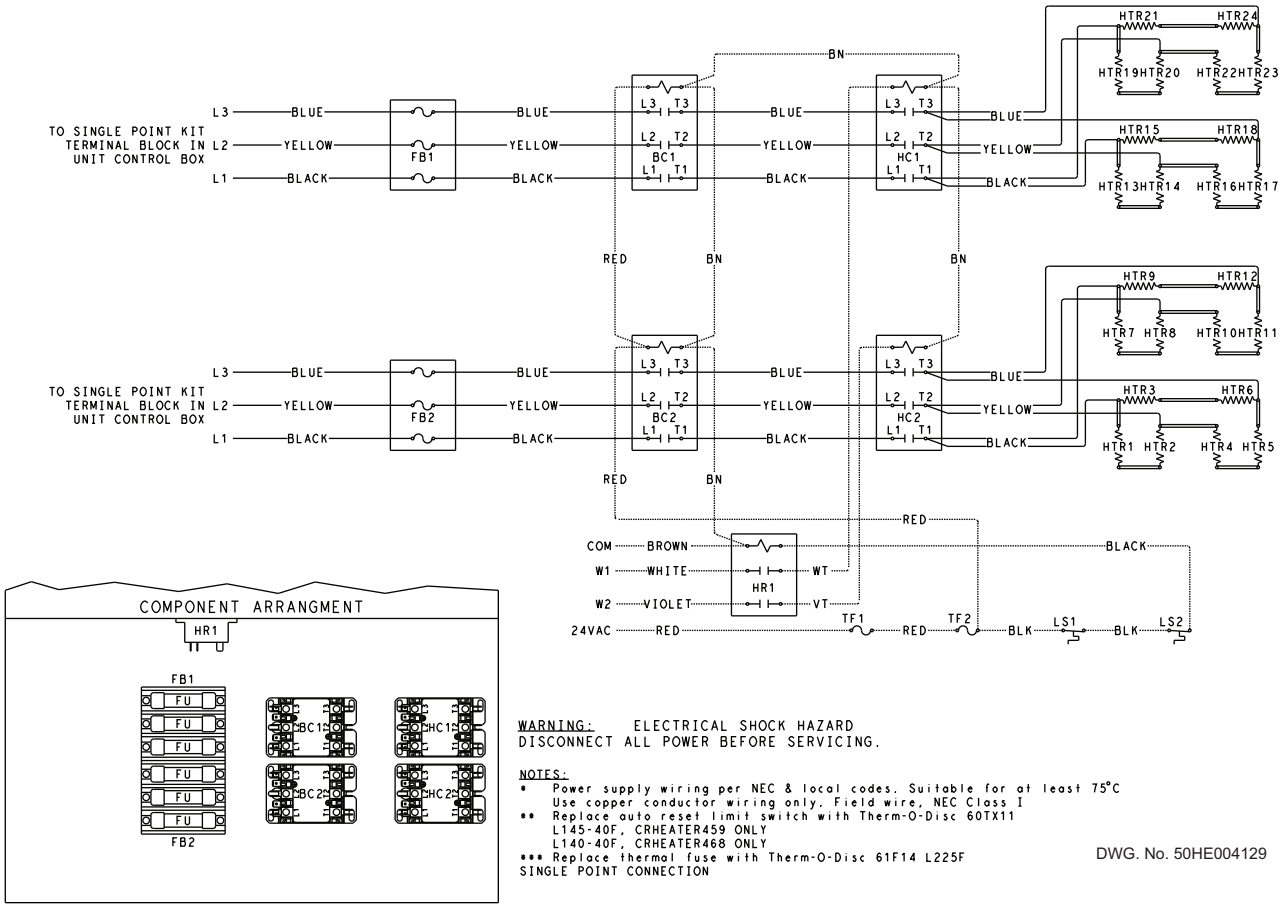

WARNING: ELECTRICAL SHOCK HAZARD
DISCONNECT ALL POWER BEFORE SERVICING.

NOTES:
* Power supply wiring per NEC & local codes. Suitable for at least 75°C
Use copper conductor wiring only. Field wire, NEC Class I
** Replace auto reset limit switch with Therm-O-Disc 60TX11
L145-40F, CRHEATER459 ONLY
L140-40F, CRHEATER468 ONLY
*** Replace thermal fuse with Therm-O-Disc 61F14 L225F
SINGLE POINT CONNECTION

DWG. No. 50HE004129

LEGEND

BC — Backup Contactor
FB — Fuse Block
FU — Fuse
HTR — Heater
HC — Heater Contactor
HR — Heater Relay
LS — Limit Switch
TF — Thermal Fuse

Fig. 23 — Typical Control Wiring Heater Accessory CRHEATER468A00 (480V, 3-Phase, Nominal kW 75.0, 2-Step, 60 Hz, Horizontal) (cont)

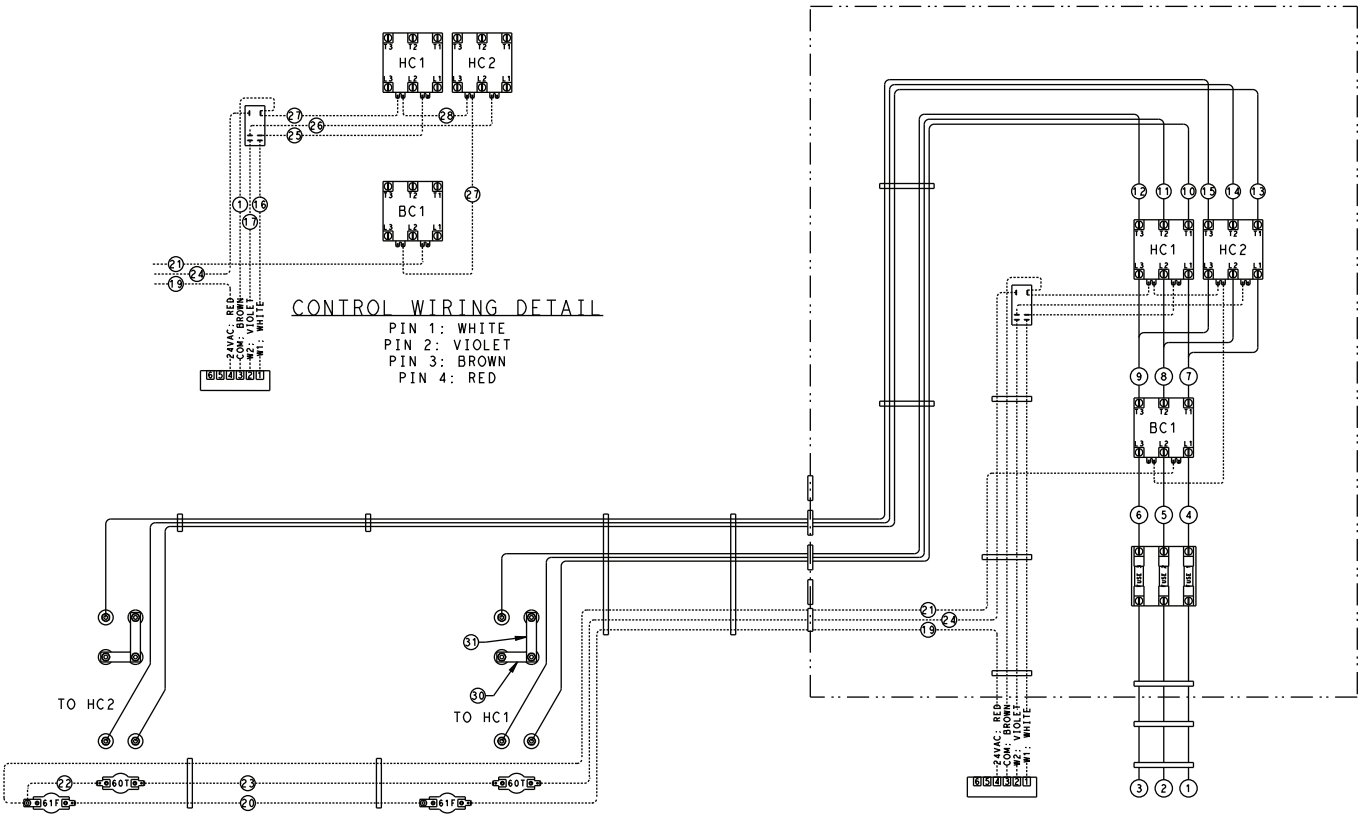

DWG. No. 50HE 004130

NOTE(S):

1. Line voltage heater circuit wires to be stranded 14 gauge min with 2/64 in. thick thermoplastic insulation rated at 105°C and 600 volts.
2. Low voltage control circuit wires to be stranded 18 gauge with 2/64 in. thick thermoplastic insulation rated at 105°C and 600 volts.
3. Reference Backer wiring accessory P/N 052-490694-61 for item numbers.

Fig. 24 — Typical Control Wiring Heater Accessory CRHEATER469A00 (600V, 3-Phase, Nominal kW 24.8, 2-Step, 60 Hz, Horizontal)

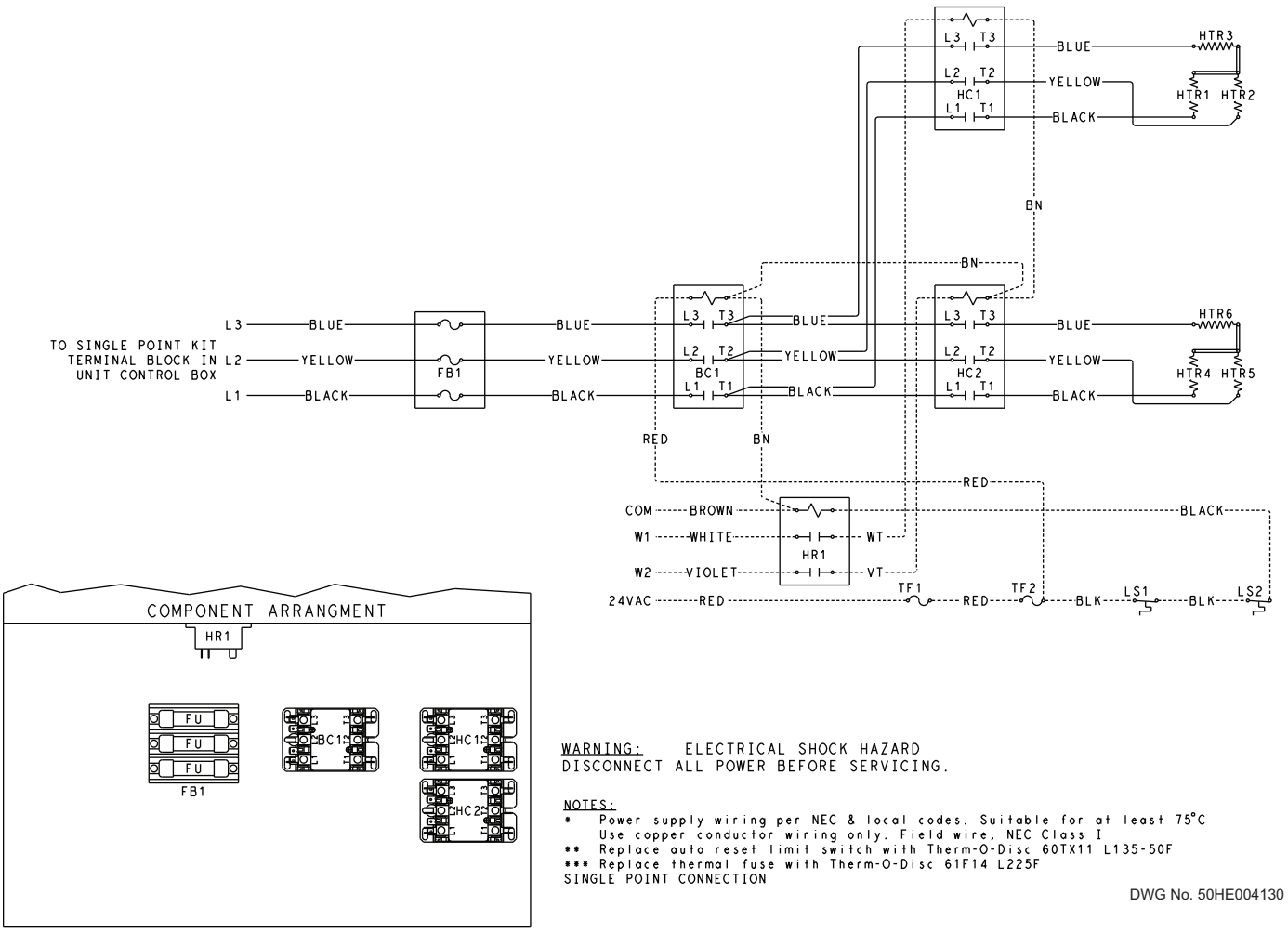

LEGEND

BC — Backup Contactor
FB — Fuse Block
FU — Fuse
HTR — Heater
HC — Heater Contactor
HR — Heater Relay
LS — Limit Switch
TF — Thermal Fuse

Fig. 24 — Typical Control Wiring Heater Accessory CRHEATER469A00 (600V, 3-Phase, Nominal kW 24.8, 2-Step, 60 Hz, Horizontal) (cont)

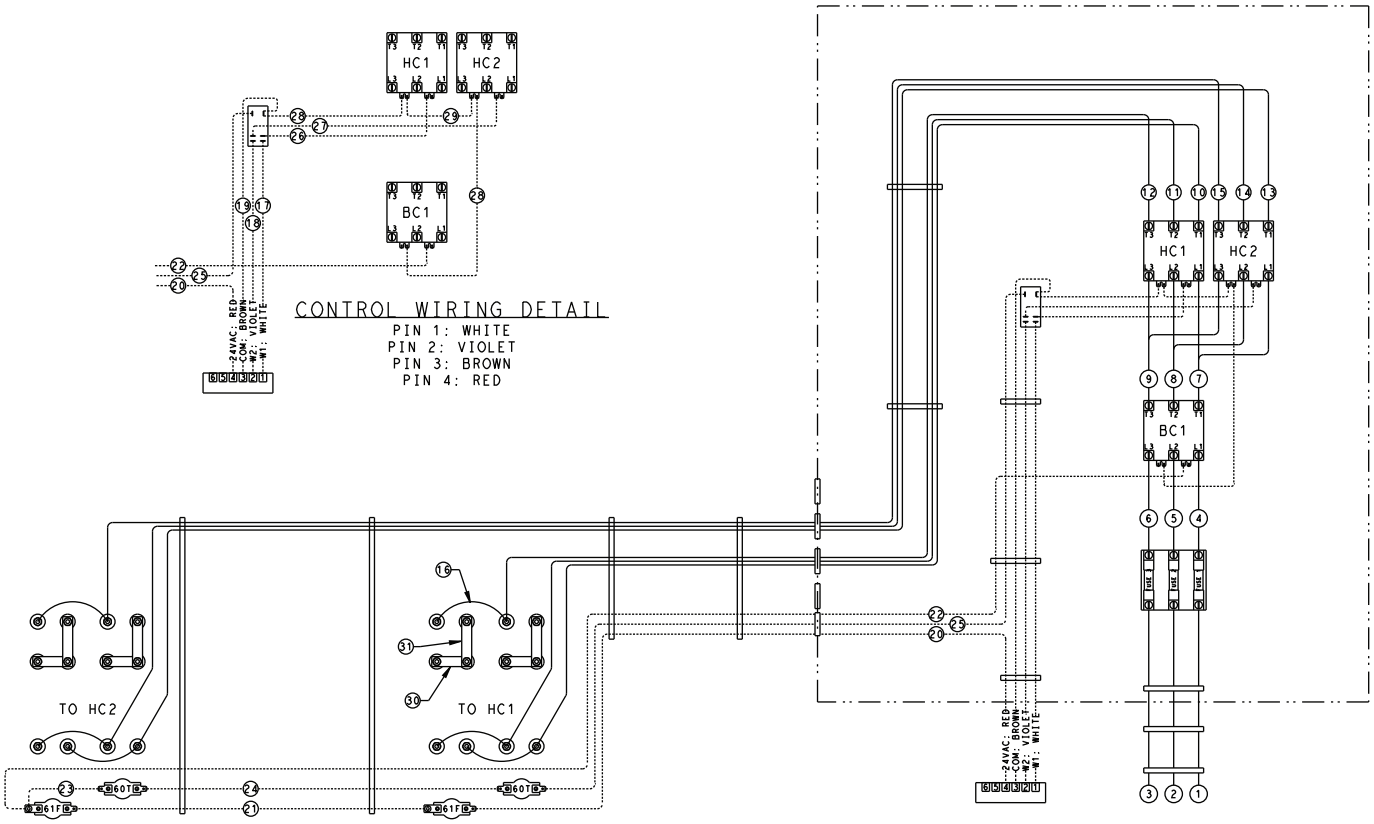

NOTE(S):

1. Line voltage heater circuit wires to be stranded 14 gauge min with 2/64 in. thick thermoplastic insulation rated at 105°C and 600 volts.
2. Low voltage control circuit wires to be stranded 18 gauge with 2/64 in. thick thermoplastic insulation rated at 105°C and 600 volts.
3. Reference Backer wiring accessory P/N 052-490694-61 for item numbers.

Fig. 25 — Typical Control Wiring Heater Accessory CRHEATER470A00 (600V, 3-Phase, Nominal kW 49.6, 2-Step, 60 Hz, Horizontal)

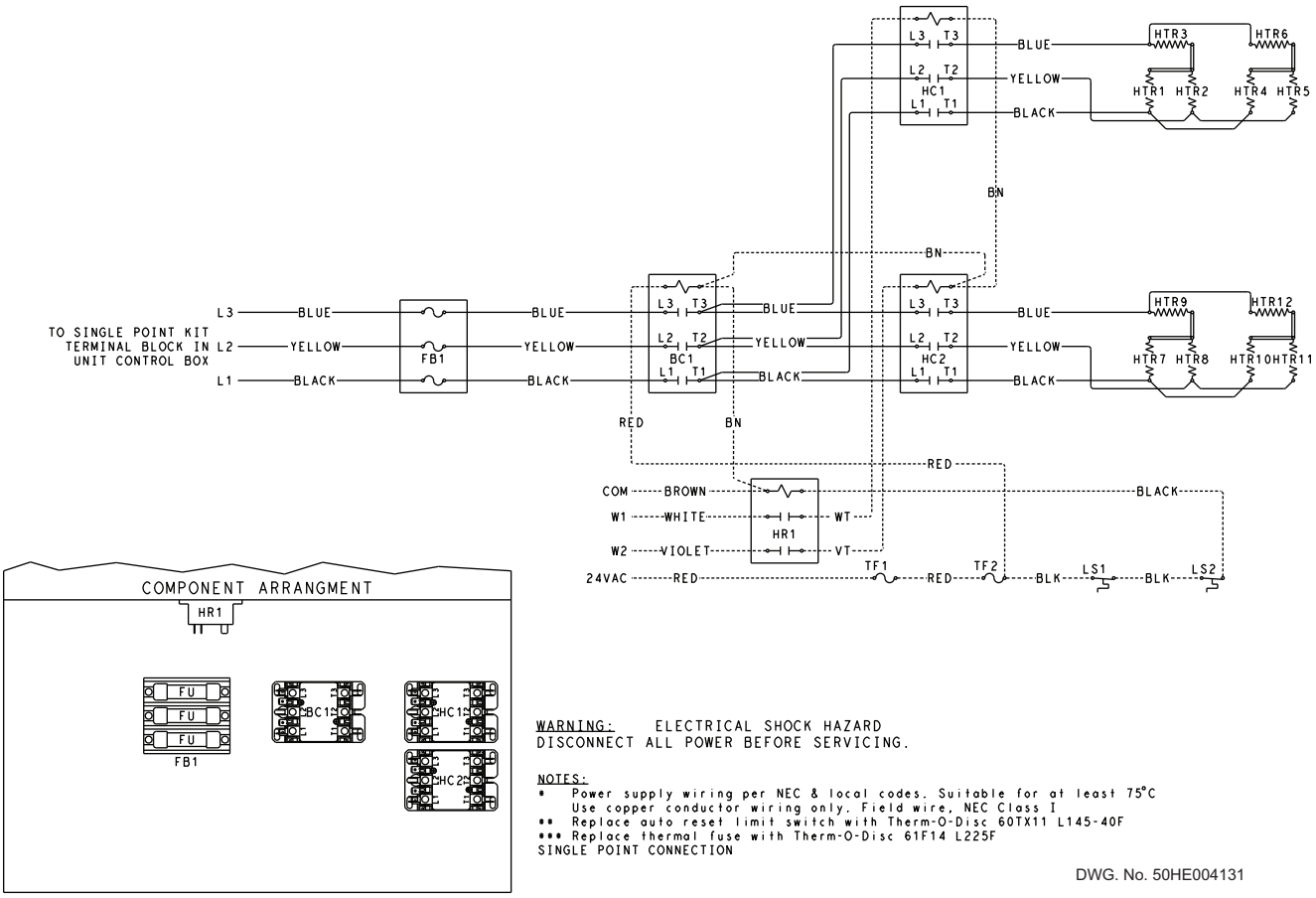

LEGEND

BC — Backup Contactor
FB — Fuse Block
FU — Fuse
HTR — Heater
HC — Heater Contactor
HR — Heater Relay
LS — Limit Switch
TF — Thermal Fuse

Fig. 25 — Typical Control Wiring Heater Accessory CRHEATER470A00 (600V, 3-Phase, Nominal kW 49.6, 2-Step, 60 Hz, Horizontal) (cont)

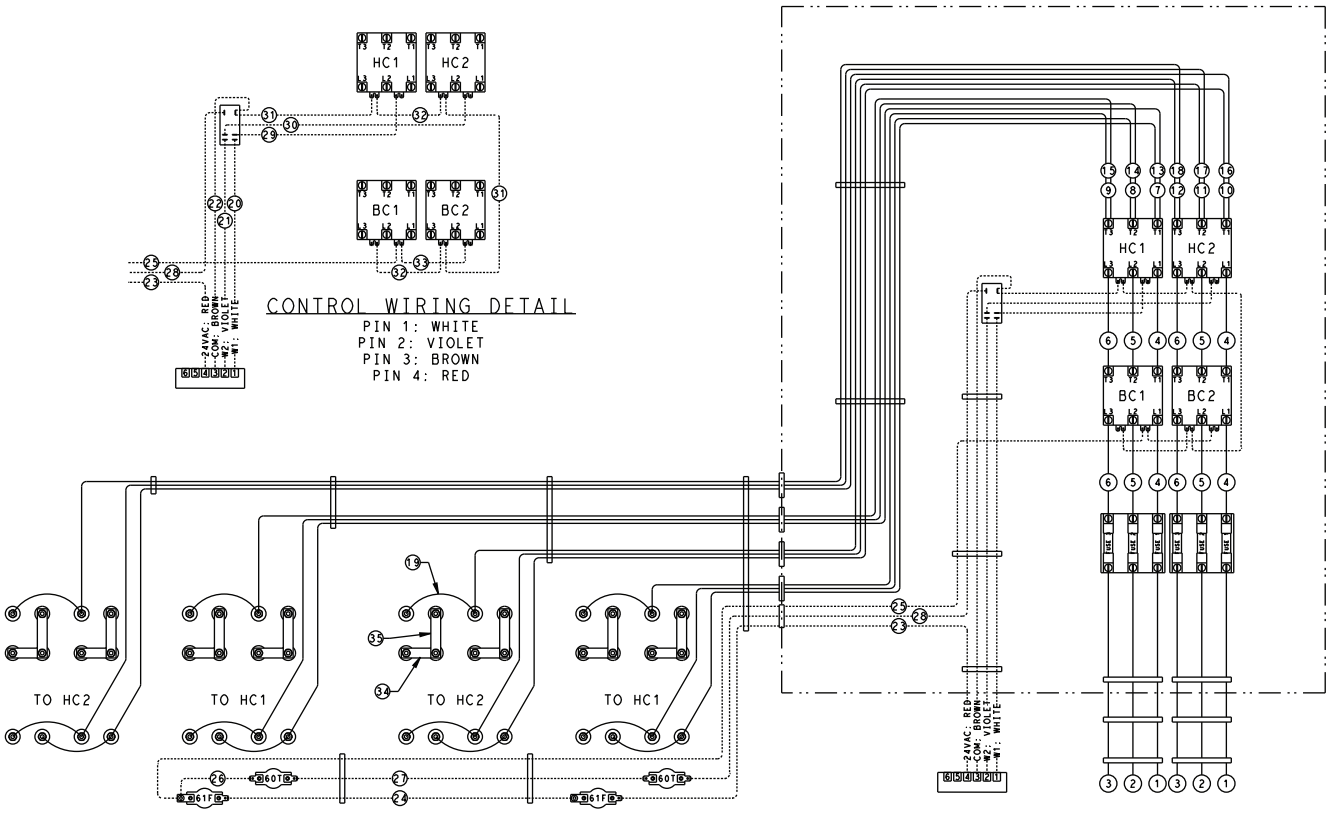

DWG. No. 50HE004132

NOTE(S):

1. Line voltage heater circuit wires to be stranded 14 gauge min with 2/64 in. thick thermoplastic insulation rated at 105°C and 600 volts.
2. Low voltage control circuit wires to be stranded 18 gauge with 2/64 in. thick thermoplastic insulation rated at 105°C and 600 volts.
3. Reference Backer wiring accessory P/N 052-490694-61 for item numbers.

Fig. 26 — Typical Control Wiring Heater Accessory CRHEATER471A00 (600V, 3-Phase, Nominal kW 74.4, 2-Step, 60 Hz, Horizontal)

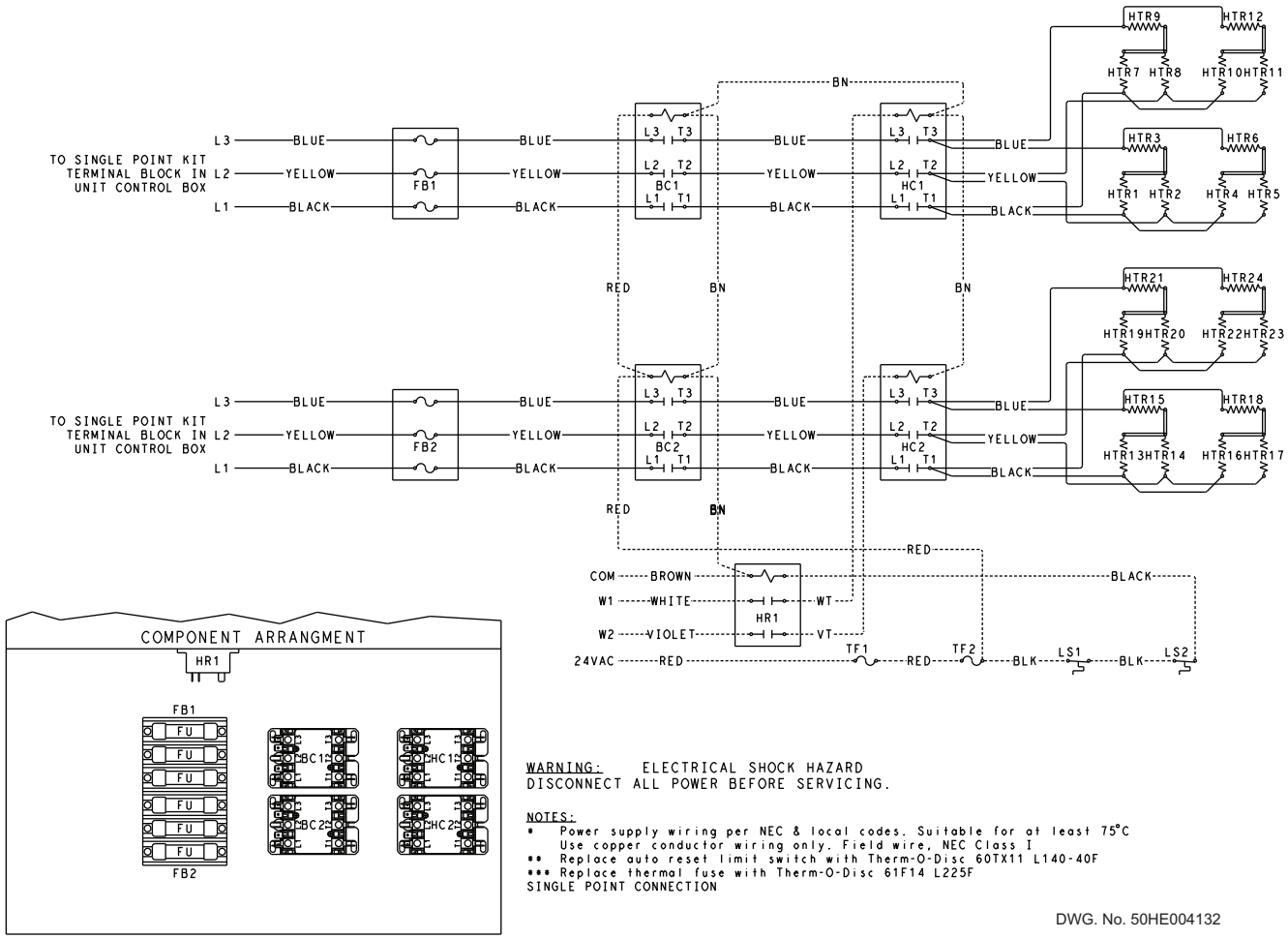

LEGEND

BC — Backup Contactor
FB — Fuse Block
FU — Fuse
HTR — Heater
HC — Heater Contactor
HR — Heater Relay
LS — Limit Switch
TF — Thermal Fuse

Fig. 26 — Typical Control Wiring Heater Accessory CRHEATER471A00 (600V, 3-Phase, Nominal kW 74.4, 2-Step, 60 Hz, Horizontal) (cont)

© 2024 Carrier