Installation Instructions

Part Number CRLAMBKT001A01

TABLE OF CONTENTS

SAFETY CONSIDERATIONS 1
BEFORE INSTALLATION 1
GENERAL 1
575-v Units Only 2
INSTALLATION 5
48/50FC/FCQ, 582K/559K/547K, RGV/RAV/RHV Units 5
- FOR 230-V, 460-V, AND 575-V UNITS
- FOR 575-V UNITS ONLY
- FOR 230-V AND 460-V UNITS ONLY
- FINAL STEPS FOR 230-V, 460-V, 575-V UNITS

INSTALLATION 11
48/50GC/GCQ, 581K/551K/549K, RGW/RAW/RHW Units 11
- FOR 230-V, 460-V, AND 575-V UNITS
- 575-V UNITS ONLY
- 230-V AND 460-V UNITS ONLY
- FINAL STEPS FOR 230-V, 460-V, 575-V UNITS

FABRICATE WIND BAFFLES 17

IMPORTANT: Read these instructions completely before attempting to install this accessory.

SAFETY CONSIDERATIONS

Improper installation, adjustment, alteration, service, maintenance, or use can cause explosion, fire, electrical shock or other conditions which may cause personal injury or property damage. Consult a qualified installer, service agency, or your distributor or branch for information or assistance. The qualified installer or agency must use factory-authorized kits or accessories when modifying this product. Refer to the individual instructions packaged with the kits or accessories when installing.

Follow all safety codes. Wear safety glasses and work gloves. Use quenching cloths for brazing operations and have a fire extinguisher available. Read these instructions thoroughly and follow all warnings or cautions attached to the unit. Consult local building codes and appropriate national electrical codes (in USA, ANSI/NFPA70, National Electrical Code (NEC); in Canada, CSA C22.1) for special requirements.

It is important to recognize safety information. This is the safety-alert symbol ⚠. When you see this symbol on the unit and in instructions or manuals, be alert to the potential for personal injury.

Understand the signal words DANGER, WARNING, CAUTION, and NOTE. These words are used with the safety-alert symbol. DANGER identifies the most serious hazards which **will** result in severe personal injury or death. WARNING signifies hazards which **could** result in personal injury or death. CAUTION is used to identify unsafe practices, which **may** result in minor personal injury or product and property damage. NOTE is used to highlight suggestions which **will** result in enhanced installation, reliability, or operation.

⚠ WARNING

ELECTRICAL SHOCK HAZARD

Failure to follow this warning could cause personal injury or death.

Before performing service or maintenance operations on unit, turn off main power switch to unit and install lock(s) and lock-out tag(s). Ensure electrical service to rooftop unit agrees with voltage and amperage listed on the unit rating plate. Unit may have more than one power switch.

⚠ WARNING

ELECTRICAL OPERATION HAZARD

Failure to follow this warning could result in personal injury or death.

Disconnect power supply and install lockout tag before attempting to install accessory.

BEFORE INSTALLATION

Inspect the contents of this accessory package before installing. File a claim with the shipping provider if contents are damaged or parts are missing. (See Table 1.)

GENERAL

The head pressure control kit regulates outdoor (condenser) fan speed during cooling mode operation. A temperature sensor mounted on a return bend of the outdoor (condenser) coil controls the speed of approved outdoor fan motors in order to maintain a constant head pressure in the outdoor coil. For the approved fan motors. (See Table 2.) The control is connected to the single outdoor fan motor.

When properly installed, the control will maintain the appropriate head pressure at low ambient temperatures between 40°F (4.4°C) and 0°F (–17.8°C). The controller will not be activated until the outside air temperature is below 40°F (4.4°C). The unit without the low ambient kit is rated for 40°F (4.4°C) outside air.

The controller is designed to apply full voltage to the motor with probe temperatures above 100°F (37.8°C) or if the outside air is above 40°F (4.4°C). With probe temperatures between 100°F (37.8°C) and 70°F (21.1°C) and outdoor air below 40°F (4.4°C), the motor speed is proportional to the probe temperature. As the temperature being sensed decreases, the output voltage decreases. With probe temperature below 70°F (21.1°C), the motor will remain off. If the cut-out speed knob is not set to minimum, the motor may cut out sooner and at a higher probe temperature than 70°F

(21.1°C), limiting the motor's modulation range. Once the probe temperature increases above 70°F (21.1°C), the motor will restart to the hard start knob setting. The hard start setting allows the motor to begin at a higher RPM upon restart than the RPM corresponding to the probe's temperature. This avoids low RPMs of the condenser motor.

During heat pump operation, the outdoor coil acts as the evaporator, and the controller is bypassed so that liquid does not enter the compressor.

The head pressure control kit in this application is only to be used with an approved condenser motor. The hard start knob setting and the cut-out speed knob are to be set to minimum for proper functionality.

See Fig. 1 for controller assembly. See Fig. 2 and 3 for voltage harness information.

575-v Units Only

On 575-v units, the 575-v factory-installed outdoor (condenser) motor is replaced with a 230-v approved fan motor. This is powered through a stepdown (575-v to 230-v) and controlled through the 230-v connection on the controller.

⚠ WARNING

CUT HAZARD

Failure to follow this caution may result in personal injury.

Sheet metal parts may have sharp edges or burrs. Use care and wear appropriate protective clothing, safety glasses and gloves when handling parts and servicing air conditioning equipment.

⚠ WARNING

ELECTRICAL SHOCK HAZARD

Failure to follow this warning could result in personal injury or death.

Before installation or servicing system, always turn off main power to system ad install lockout tag. Unit may have more than one disconnect switch. Turn off the accessory heater power switch, if applicable.

Table 1 — Package Contents (CRLAMBKT001A01)

PART DESCRIPTION	PART NUMBER	PART QUANTITY	REFERENCE NUMBER
Controller 230V/ 460V	P251-0083H (48TC002173)	1	1
Controller Screws 8-18x1/2	AL56AU166	6	2
Relay	HN61PK052	1	4
Controller Cover	48TC001901	1	6
Screw	AK92AB098	2	7
Hex Screw #10 x 5/8	AL76AU217	6	8
Controller Bracket	48TC500030	1	9
Wire Tie	HY76TB110	1	10
Snap Bushings 0.875-in. dia.	HY93NH008	2	11
Label	48TC500080	1	13
Thermistor Sensor	48TC001913	1	14
Controller Harness Assembly	48TC002189	1	15 (see Fig. 1)
Temperature Switch	HH22QB047	1	16
Low Voltage Control Box Harness	48TCHSRATH HA00	1	N/A (see Fig.3)
High Voltage Control Box Harness	48TCHSRATH HA10	1	N/A (see Fig. 2)
Insulation Tape	PF01-84	2-in.	N/A
Wire Tie	HY76TB125	6	N/A

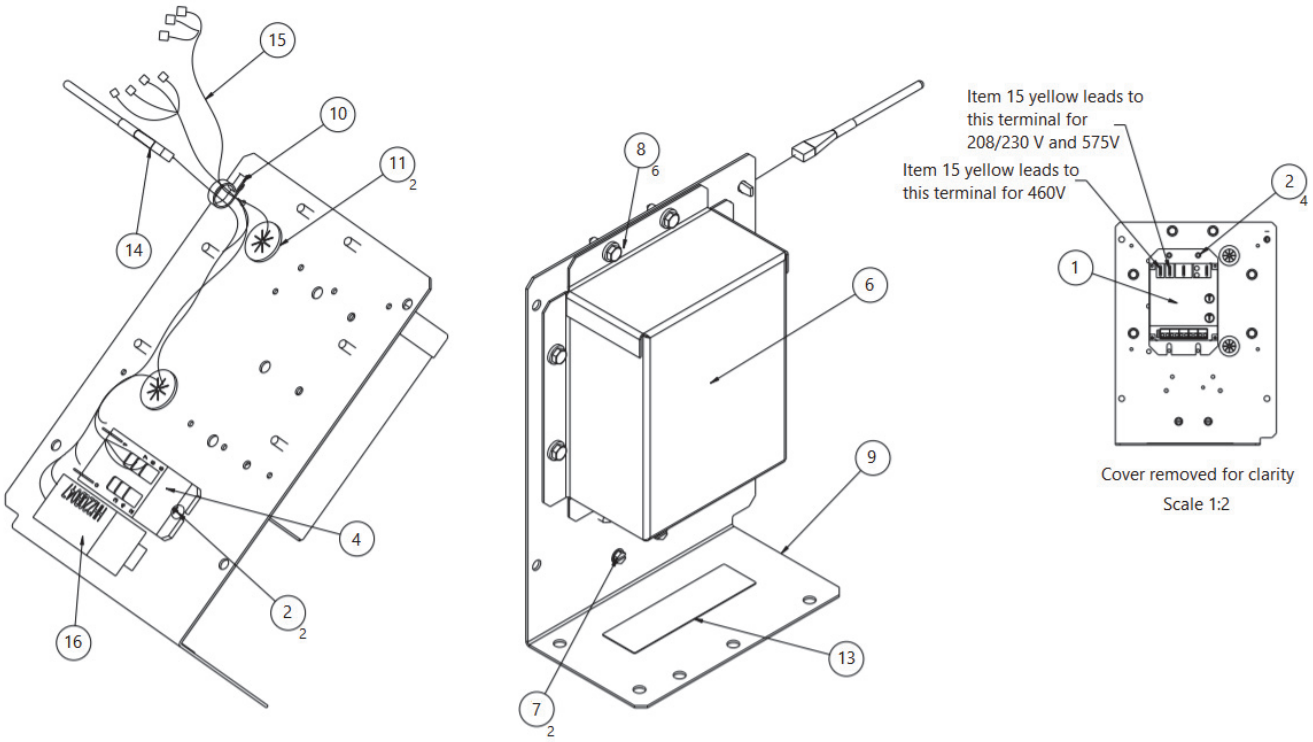

Fig. 1 — Controller Assembly

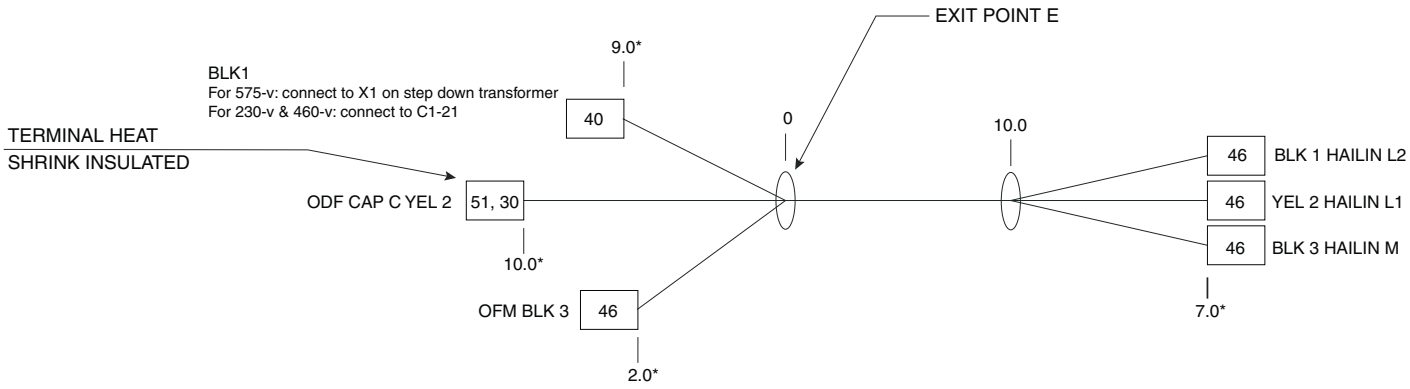

WIRE NUMBER	COLOR	FROM/CONNECTION TYPE			
		FROM	CONN TYPE	TERMINAL NUMBER	END MARKING
1	BLK	OFO TERM 2/DEFROST BOARD OF or Trans-X1	ULTRAPOD FEMALE .250 Q.C.	40	OFO-2/DFB OF
2	YEL	ODF CAPACITOR C	FEMALE .250 Q.C. W/ HEATSHRINK	51, 30	ODF CAP C
3	BLK	OFM	INSULATED .250 MALE TAB	46	OFM

TO/CONNECTION TYPE				LENGTH	WIRE GAUGE
TO	CONN TYPE	TERMINAL NUMBER	END MARKING		
HAILIN L2	INSULATED .250 MALE TAB	46	HAILIN L2	26.00	18
HAILIN L1	INSULATED .250 MALE TAB	46	HAILIN L1	27.00	18
HAILIN M	ULTRAPOD FEMALE .250 Q.C.	46	HAILIN M	19.00	18

NOTE: BLK 3 is only used on 48/50GC, 581K/551K, and RGW/RAW.

Fig. 2 — High Voltage Harness

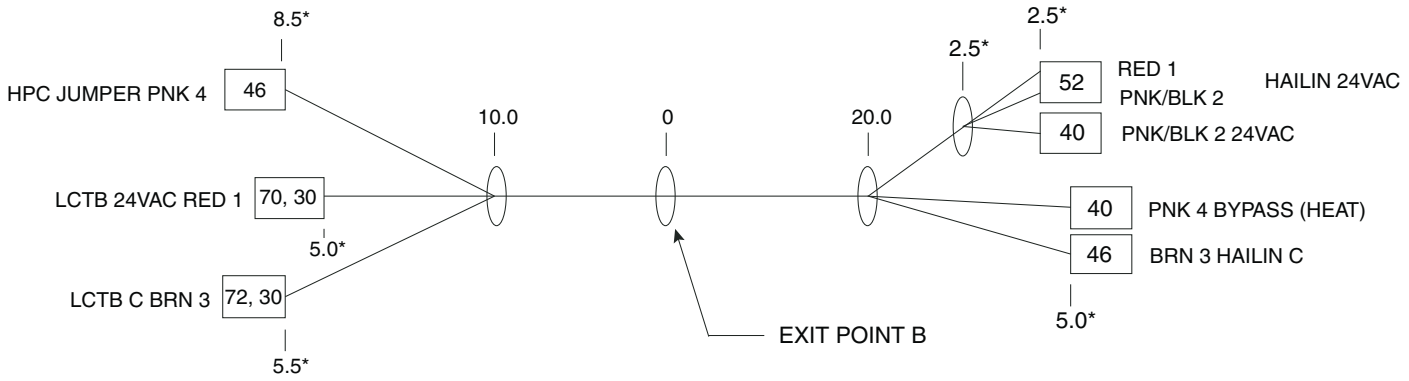

WIRE NUMBER	COLOR	FROM/CONNECTION TYPE			
		FROM	CONN TYPE	TERMINAL NUMBER	END MARKING
1	RED	LCTB 24VAC	.250 PIGGYBACK W/ HEATSHRINK	70, 30	LCTB 24VAC
2	PNK/BLK	24VAC	ULTRAPOD FEMALE .250 Q.C.	40	24VAC
3	BRN	LCTB COMMON	.187 PIGGYBACK W/ HEATSHRINK	72, 30	LCTB C
4	PNK	HPC JUMPER	INSULATED .250 MALE TAB	46	HPC JUMPER

TO/CONNECTION TYPE				LENGTH	WIRE GAUGE
TO	CONN TYPE	TERMINAL NUMBER	END MARKING		
HAILIN 24VAC	2 INTO 1 ULTRAPOD MALE .250 TAB	52	HAILIN 24VAC	40.00	18
				5.00	18
HAILIN COMMON	INSULATED .250 MALE TAB	46	HAILIN C	40.50	18
BYPASS (HEAT)	ULTRAPOD FEMALE .250 Q.C.	40	BYPASS (HEAT)	43.50	18

Fig. 3 — Low Voltage Harness

Table 2 — Product Usage

UNIT MODEL NUMBER	UNIT VOLTAGE	MOTOR P/N	CAPACITOR P/N	TRANSFORMER P/N	LOW AMBIENT KIT ACCESSORY	WINTER START KIT ACCESSORY
48/50FC, 50FCQ*04-07 582K/559K/547K*04-07 RGV/RAV/RHV*036-072	208/230-1-60	HC40GR242	Keep factory-installed option	n/a	CRLAMBKT001A01	CRWINSTR001A00
	208/230-3-60	HC40GR242	Keep factory-installed option	n/a		
	460-3-60	HC40GR461	Replace with P291-1004	n/a		
	575-3-60	HC40GR242	Replace with P291-1004	HT01AH856		
48/50GC*M, 50GCQ*04 581K/551K*04F/N/P/Q 549K*04 RGW/RAW/RHW*036	208/230-1-60	HC40GR239	Replace with P291-4554RS	n/a		
	208/230-3-60	HC40GR239	Replace with P291-1004	n/a		
	460-3-60	HC40GR463	Replace with P291-1004	n/a		
	575-3-60	HC40GR239	Replace with P291-1004	HT01AH856		
48/50GC*M, 50GCQ*05 581K/551K*05F/N/P/Q 549K*05 RGW/RAW/RHW*048	208/230-1-60	HC40GR239	Replace with P291-4074RS	n/a		
	208/230-3-60	HC40GR239	Replace with P291-1004	n/a		
	460-3-60	HC40GR463	Replace with P291-1004	n/a		
	575-3-60	HC40GR239	Replace with P291-1004	HT01AH856		
48/50GC*M, 50GCQ*06 581K/551K*06F/N/P/Q 549K*06 RGW/RAW/RHW*060	208/230-1-60	HC40GR239	Replace with P291-4514R	n/a		
	208/230-3-60	HC40GR239	Replace with P291-1004	n/a		
	460-3-60	HC40GR463	Replace with P291-1004	n/a		
	575-3-60	HC40GR239	Replace with P291-1004	HT01AH856		

IMPORTANT: This accessory is designed for specific model small rooftop units in nominal capacity range of 3 to 6 tons equipped with one outdoor fan motor. Unit sizes include 04 to 07 (036 to 072). Refer to Table 2 for valid model-size applications.

DO NOT ATEMPT TO INSTALL ON MODELS AND SIZES NOT INCLUDED IN THE PRODUCT USAGE TABLE.

The use of this kit is only intended for use with the condenser motor, capacitor, and winter start kit accessory in Table 2.

IMPORTANT: Between air conditioning units and heat pumps, there are slight wiring changes. The low voltage harness included in this kit can be used for all units, but specific wires are not used for air conditioning units. Be sure to read all instructions for clarification on which wires to use in the low voltage harness.

Refer to Table 3 for a summary.

Table 3 — Summary of Variations in Wiring between AC and Heat Pump Units

	48/50FC/GC, 582K/559K/581K/551K, RGV/RAV/RGW/RAW UNITS	50FCQ/GCQ, 547K/549K, RHV/RHW UNITS
Low Ambient Relay Connections	Red to terminal 8, violet to terminal 7	Red to terminal 7, violet to terminal 8
Use of pink and pink/black wires in Low Voltage Harness*	Unused; insulate connection ends on controller harness	Connect pink to pin 9 on UCB Reheat/HP plug, connect pink/black to red low voltage harness wire
High Voltage Harness Connections for BLK1 for 230v and 460v*	Connect BLK1 from compressor contactor terminal 21 to L2 on controller	Connect BLK1 from OFM terminal on defrost board to L2 on controller
High Voltage Harness Connections for BLK1 for 575v	Connect BLK1 from X1 termination on transformer to L2 on controller	Connect BLK1 from terminal 2 on OFO to L2 on controller; connect field-supplied black wire from terminal 4 on OFO to X1 termination on transformer
Low Voltage Harness Connections for Red and Brown Wires (SystemVu)	Red connects to terminal 4 on terminal board 4, brown connects to terminal 7 on terminal board 4	Red connects to 24V on transformer 3, brown connects to common on transformer 3
Sensor Locations	Refer to Fig. 13 and 14	Refer to Fig. 25 and 26

*Changes slightly for units with SystemVu, refer to instructions.

INSTALLATION

48/50FC/FCQ, 582K/559K/547K, RGV/RAV/RHV Units

For field-supplied wiring, use minimum 16 gauge and $^{2}/_{64}$-in. thickness rated for 600-v.

FOR 230-V, 460-V, AND 575-V UNITS

1. Disconnect power to the unit. Lockout/tag-out unit disconnect switch.
2. Open and remove the access panel and cover to the main control box.
3. Use a voltmeter to check that no power is present at unit terminal block.
4. Disconnect condenser motor harness from control box connections.
   a. For 48/50FC, 582/559K, and RGV/RAV units: Remove black motor wire from the compressor contactor terminal 21.
   b. For 50FCQ, 547K and RHV units with standard controls only: Remove black motor wire from OFM terminal on the defrost board. For 575v units, remove black motor wire from OFO terminal 2.
   c. For 50FCQ, 547K and RHV units with SystemVu only: Remove black motor wire from outdoor fan on relay (OFO) terminal 2.
   d. For all units: Remove brown and yellow motor wires from the condensor motor capacitor. Carefully remove harness ends from control box.
5. Remove the motor assembly from the top cover and install matching condenser motor as suggested in Table 2. Route new motor harness to control box following the same path as preceding motor. At this time, also replace the condenser capacitor in the control box if required by Table 2.
6. Connect the yellow and brown wires from the new motor to the condenser capacitor.
7. Install the controller assembly in the location shown in Fig. 4. Connect the black motor wire's female quick connect to the black wire on the controller's harness attached to the controller's "MTR2."

FOR 575-V UNITS ONLY

1. Follow Steps 1-7 in the previous section.
2. Install transformer HT01AH856 (0.75kva, 575v to 230v) or equivalent field-supplied transformer. For transformer and controller locations, refer to Fig. 4. See Fig. 5 or 6 for connections.
3. Connect a field-supplied black wire from terminal block 21 in the control box to the transformer H1 termination, as shown in Fig. 5 or 6.
4. Connect a field supplied yellow wire from terminal block 22 in the control box to the transformer H2 termination as shown in Fig. 5 or 6.
5.
   a. For 48/50FC, 582K/559K, and RGV/RAV units only: Connect a field-supplied black wire from transformer X1 termination to the controller's harness black female quick connect attached to the controller's "L2."
   b. For 50FCQ, 547K, and RHV units only: Connect a field-supplied black wire from transformer X1 termination to terminal 4 on the outdoor fan on relay (OFO). Connect a field-supplied black wire from terminal 2 on outdoor fan on relay to controller's black wire's female quick connect ("L2" on the controller).
6. Disconnect the yellow wire from compressor contactor terminal 23 (See item C1 in Fig. 7) and connect to transformer X4 termination using a field supplied wire. (See Fig. 5 or 6.)

FOR 230-V AND 460-V UNITS ONLY

1. Follow steps 1-7 in the section "For 230-v, 460-v, and 575-v Units" on this page.
2. Use high voltage harness 48TCHSRATHHA10 for all units (see Fig. 2). Route harness into control box. (See Fig. 4.) BLK3 is not used in 48/50FC/FCQ, 582K/559K/547K, or RGV/RAV/RHV units because the motor's black wire connects directly to the controller rather than to a relay. (See Fig. 8, 9, and 10 for connections.)
3.
   a. For 48/50FC, 582K/559K, and RGV/RAV units only: Connect BLK1 female quick connect to compressor contactor 21. Connect the male quick connect on BLK1 to the black female quick connect on the controller's harness attached to the controller's "L2".
   b. For 50FCQ, 547K, and RHV units with standard controls only: Connect BLK1 female quick connect to OFM terminal on defrost board. Connect the male quick connect on BLK1 to the black female quick connect on the controller's harness attached to the controller's "L2".
   c. For 50FCQ, 547K and RHV units with SystemVu only: Connect BLK1 female quick connect to terminal 2 on outdoor fan on relay (OFO). Connect the male quick connect on the BLK1 to the black female quick connect on the controller's harness attached to the controller's "L2".
4. Connect the YEL2 female quick connect to condenser capacitor in the control box. Connect the male quick connect on YEL2 to the yellow female quick connect on the controller's harness attached to the "L1" on the controller.

IMPORTANT: When installing 460-v units, the YEL quick connect on the head pressure controller needs to be switched from 230-v on L1 connection. See Fig. 8 for wiring schematic.

IMPORTANT: When installing heat pump units, the following modification must be made. Locate the low ambient relay on the back of the controller bracket. Remove the red wire from terminal 8 and the violet wire from terminal 7. Swap them so that the red wire connects to terminal 7 and the violet wire connects to terminal 8. (See Fig. 12).

FINAL STEPS FOR 230-V, 460-V, 575-V UNITS

1. Use low voltage harness 48TCHSRATHHA00 provided in kit for all units (see Fig. 3). Route harness into control box. (See Fig. 4) (Fig. 11 and 12 for connections.).
2.
   a. For units with standard controls only: Connect the red and brown piggyback connectors to the central terminal board in the control box. Red connects to R and brown connects to C.
   b. For 48/50FC, 582K/559K and RGV/RAV units with SystemVu only: the red and brown wires do not connect to the central terminal board. Connect the red piggyback connector to terminal 4 on terminal board 4. Connect the brown piggyback connector to terminal 7 on terminal board 4.
   c. For 50FCQ, 547K, and RHV units that use SystemVu only: The red and brown wires connect to a transformer

instead of the central terminal board. Connect the red piggyback connector to the 24V terminal on transformer 3. Connect the brown piggyback connector to the common terminal on transformer 3. Refer to unit label diagrams for the location of transformer 3.

3. Connect red and brown wire male quick connects to the controller's harness (red connects to temperature switch and brown connects to the low ambient relay).
4. Install the controller's sensor (Reference #14 from Table 1) on the outdoor condenser coil. Refer to Fig. 13 for 48/50FC, 582K/559K, and RGV/RAV units. Refer to Fig. 14 for 50FCQ, 547K, and RHV units. When installing the sensor, use 2-in. insulation tape PF01-84 and wire tie HY76TB125 to secure the sensor to the coil header.
5.
   a. For 48/50FC, 582K/559K, and RGV/RAV units with standard controls only: on the low voltage harness, the pink wire and the pink/black wire are unused. Insulate the connection ends of the pink and pink/black wires on the controller's harness.
   b. For 50FCQ, 547K and RHV units with standard controls only: Connect the pink/black wire to the red power wire attached to the central terminal board R (2-in-1 connection). Connect the pink/black female quick connect to the controller's harness. Connect the pink wire female quick connect to the loose yellow wire's male quick connect attached to pin 9 on the UCB Reheat/HP plug. Connect the male quick connect to the pink wire on the controller's harness.
   c. For 48/50FC, 582K/559K, and RGV/RAV units with SystemVu only: Connect pink female quick connect to pink jumper wire on pin 4 on J3D, and connect pink male quick connect to the controller's harness. Insulate the pink/black wire on the controller's harness. The pink/black wire is unused on the low voltage harness. Insulate the connection end of the pink/black wire on the controller's harness.
   d. For 50FCQ, 547K, and RHV units with SystemVu: Connect pink female quick connect to yellow jumper wire on pin 2 on J3D, and connect the pink male quick connect to the controller's harness. Connect pink/black wire to the red 24V transformer wire (2-in-1 connection), and connect to the controller's harness.
6. Install the winter start accessory kit CRWINSTR001A00 per that kit's instructions.
7. Fabricate and install wind baffles. Refer to pages 17 to 18.
8. For units with SystemVu, configure unit to adjust the outdoor air lockout temperature. When the unit is powered up, go to ***Settings → Unit Configurations → Cooling → Low Ambient → Cir.A Lockout OAT***. The default value of the Circuit A Lockout Temperature is 40. Change this value to 0 so the unit can operate correctly with low ambient controls.

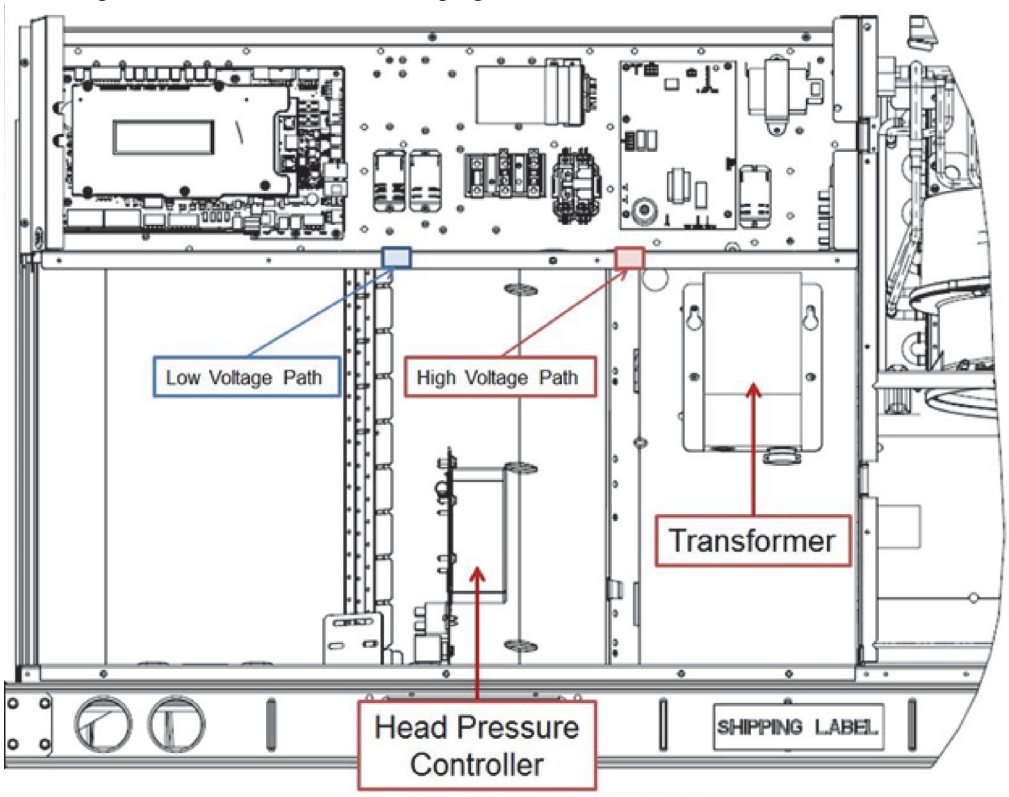

Fig. 4 — Controller and Transformer Installation Locations

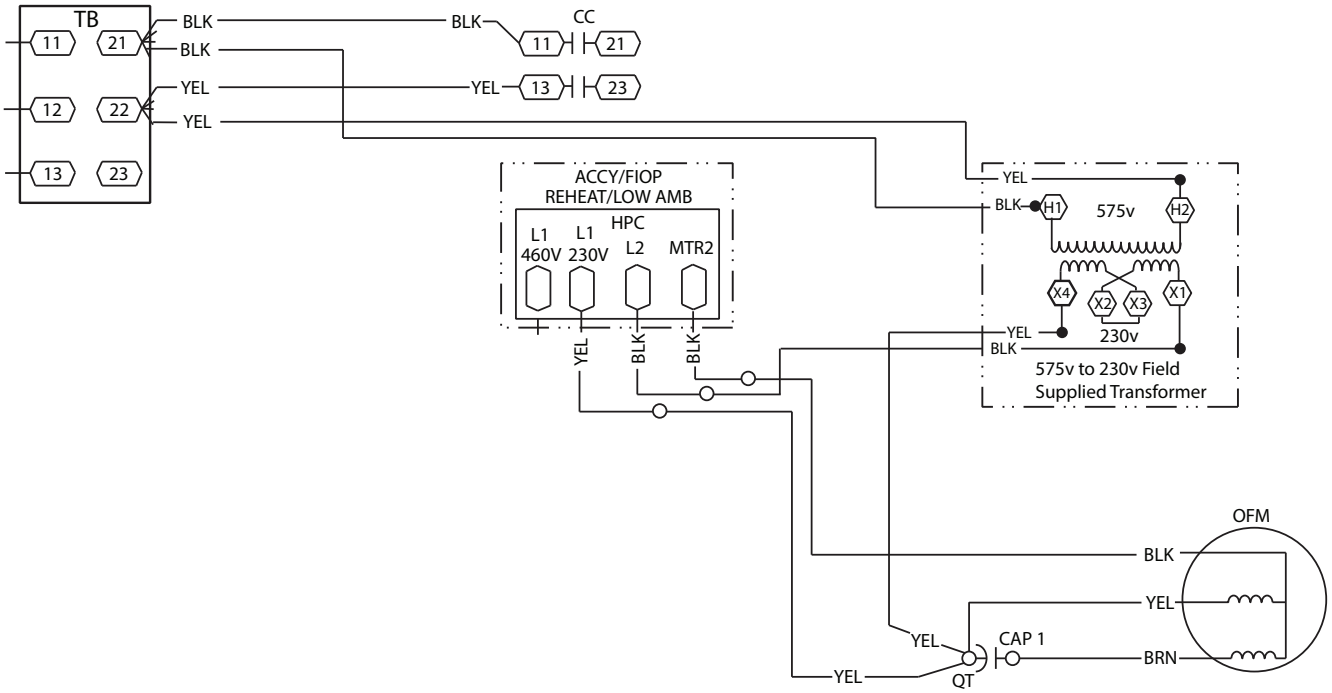

Fig. 5 — Wiring Diagram for 48/50FC, 582K/559K, RGV/RAV Units (575-v)

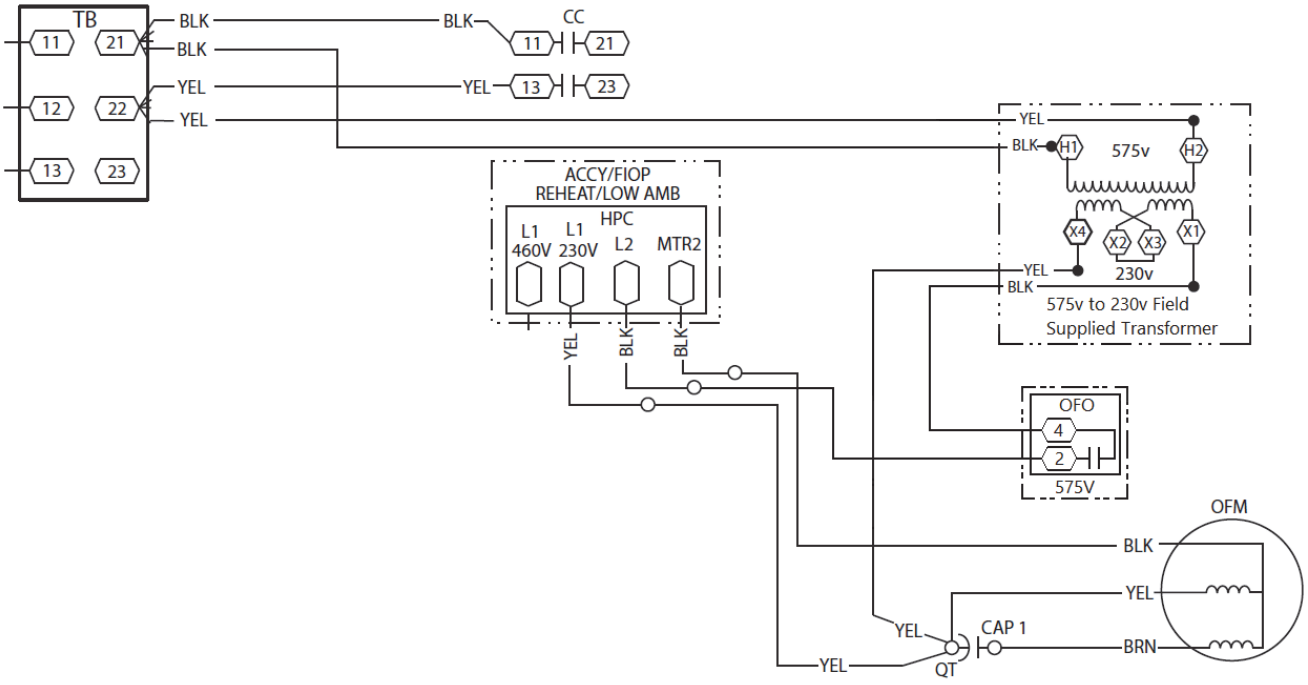

Fig. 6 — Wiring for 50FCQ, 547K, RHV Units (575-v)

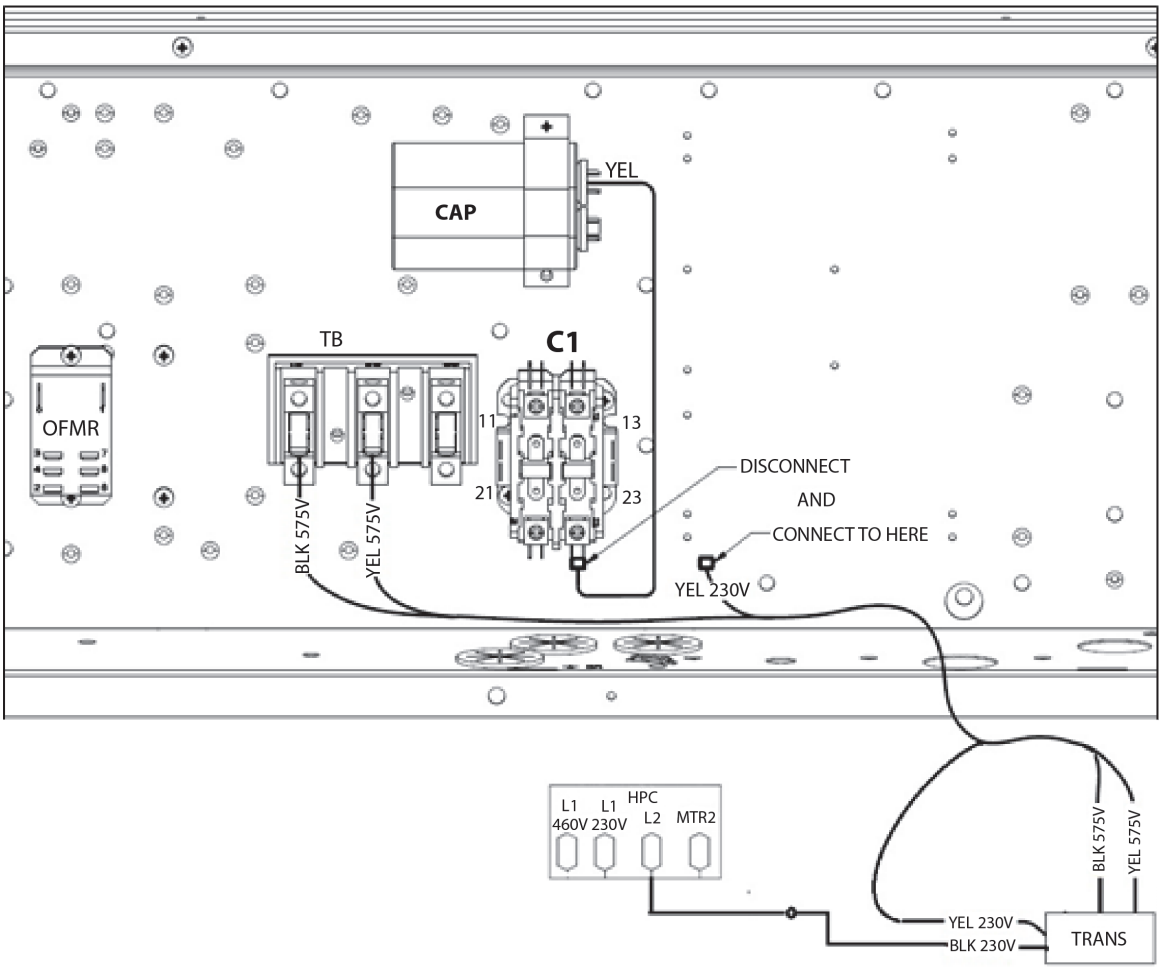

Fig. 7 — 575-v Capacitor Wire Change

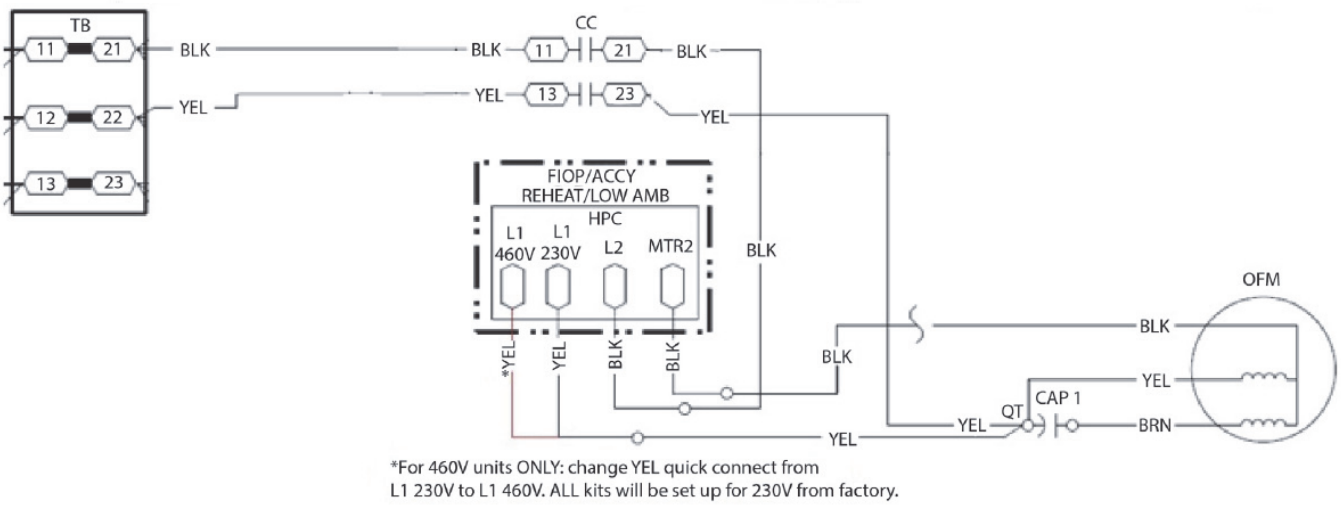

Fig. 8 — Wiring Diagram for 48/50FC, 582K/559K, RGV/RAV Units (230-v and 460-v)

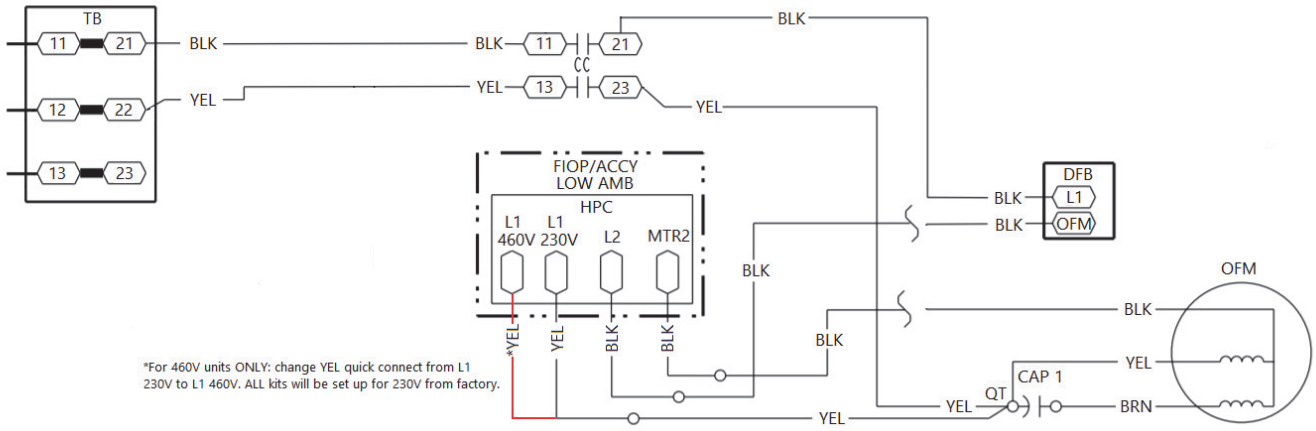

Fig. 9 — Wiring for 50FCQ, 547K, RHV Units (230-v and 460-v)

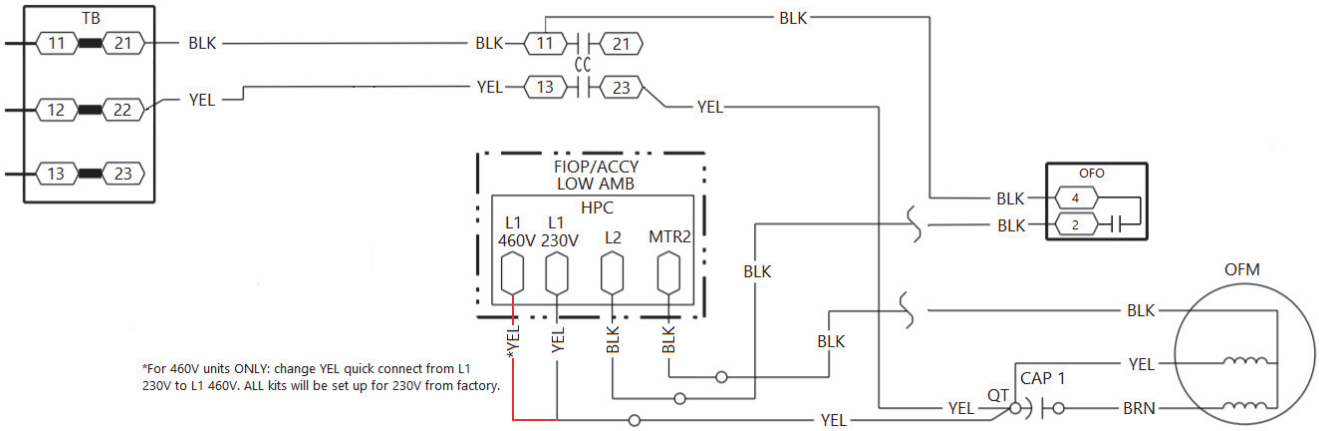

Fig. 10 — Wiring for 50FCQ, 547K, RHV Units with SystemVu (230-v and 460-v)

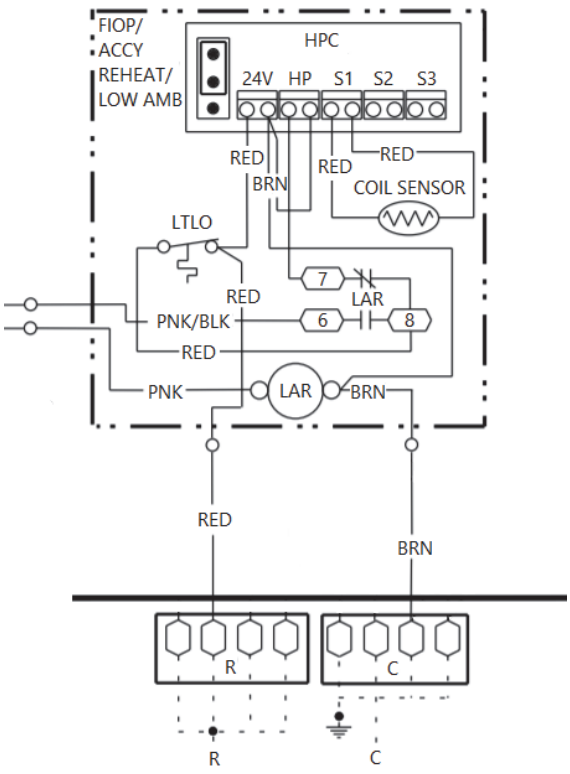

Fig. 11 — Controls Wiring Diagram for 48/50FC, 582K/559K, RGV/RAV Units

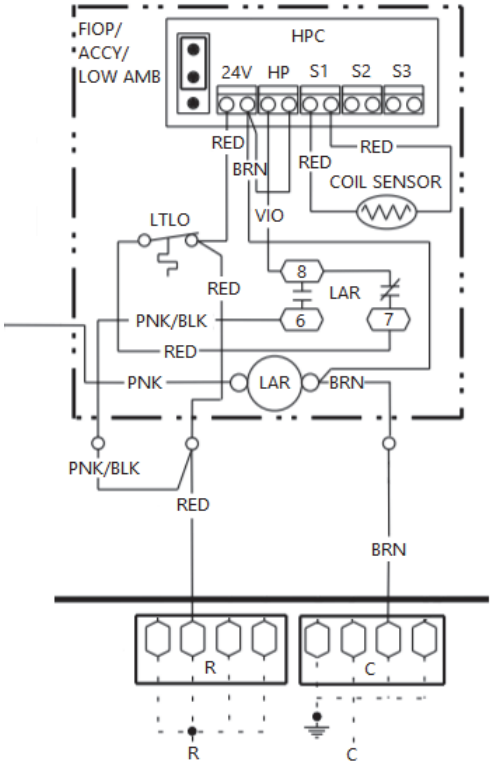

Fig. 12 — Controls Wiring Diagram for 50FCQ, 547K, RHV Units

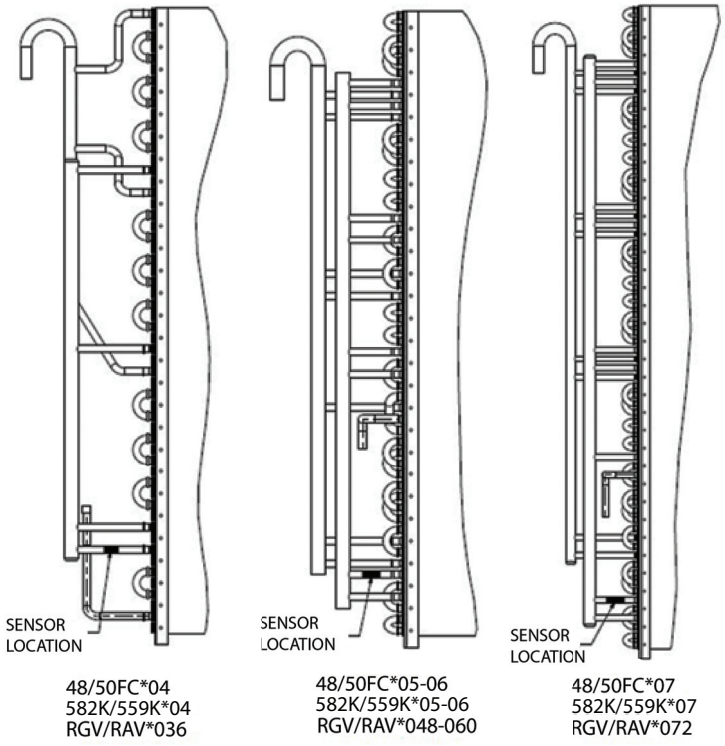

Fig. 13 — Sensor Locations for 48/50FC, 582K/559K, RGV/RAV Units

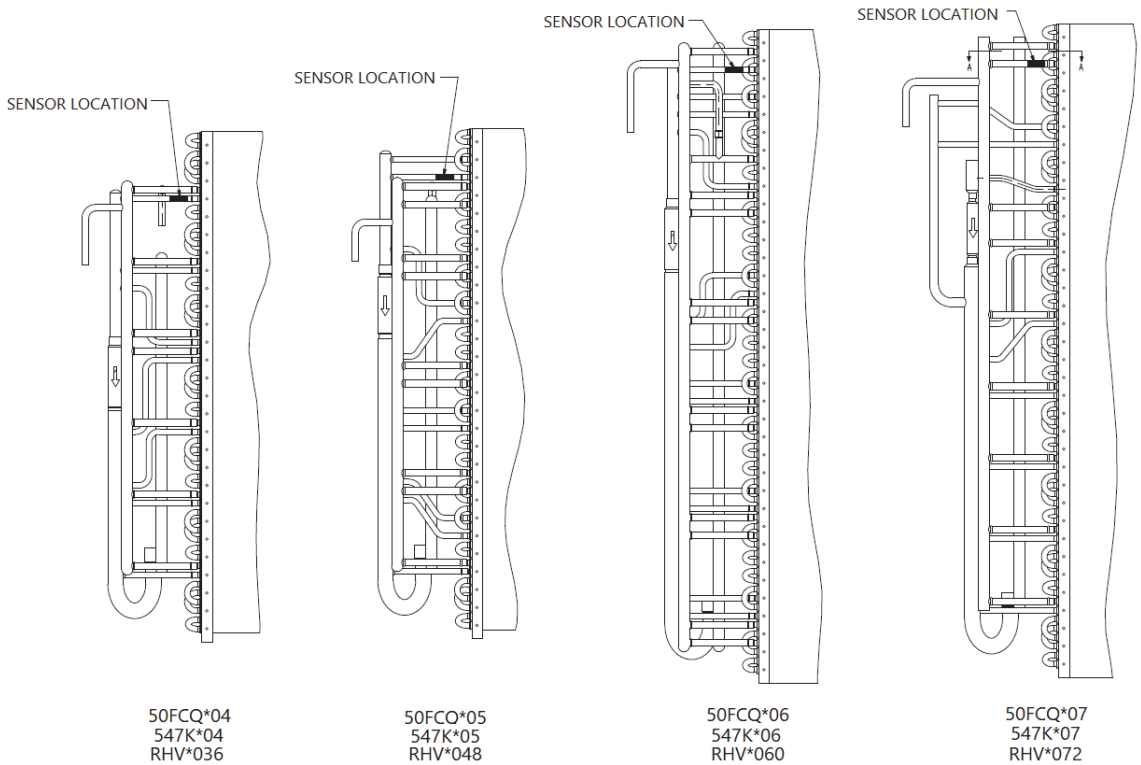

Fig. 14 — Sensor Locations for 50FCQ, 547K, RHV Units

INSTALLATION

48/50GC/GCQ, 581K/551K/549K, RGW/RAW/ RHW Units

For field-supplied wiring, use minimum 16 gauge and 2/64 in. thickness rated for 600-v.

FOR 230-V, 460-V, AND 575-V UNITS

1. Disconnect power to the unit. Lock-out/tag-out on unit disconnect switch.
2. Open and remove the access panel and cover to the main control box.
3. Use a voltmeter to check that no power is present at unit terminal block.
4. Disconnect condenser motor harness from control box connections. Remove black motor wire from the outdoor fan relay (OFR) terminal 2. Remove purple motor wire from the outdoor fan relay terminal 7.

NOTE: Only the 460-v motors will have the purple wire. The 460-v motors also have a ground that needs to be connected to a ground lug in the control box. (See Fig. 15 or 16.) Remove the red motor wire from the outdoor fan relay terminal 3. Remove brown and yellow motor wires from the condenser motor capacitor. Carefully remove harnesses ends from control box.

5. Remove the motor assembly from the top cover and install matching condenser motor from Table 2. Route new motor harness to control box following the same path as preceding motor. At this time, also replace the condenser capacitor in the control box if required by Table 2.
6. Connect yellow and brown wires from the new motor to the condenser capacitor. Connect the purple motor wire to terminal 7 (for 460-v units), the black motor wire to terminal 2, and the red motor wire to terminal 3 on the outdoor fan relay.
7. Install the controller assembly in the location shown in Fig. 4.

575-V UNITS ONLY

1. Follow steps 1 through 7 from the previous section.
2. Install transformer HT01AH856 (0.75kva, 575v to 230v) or equivalent field-supplied transformer. For transformer and controller locations. (See Fig. 4.) See Fig. 7 and 17 or 18. for connections.
3. Connect a field-supplied black wire from terminal block 21 in the control box to the transformer H1 termination as shown in Fig. 17 or 18.
4. Connect a field-supplied yellow wire from terminal block 22 in the control box to the transformer H2 termination, as shown in Fig. 17 or 18.
5. Use high voltage harness 48TCHSRATHHA10 provided in kit for all units (see Fig. 2).
6.
    a. For 48/50GC, 581K/551K, and RGW/RAW units only: Connect BLK1 wire female quick connect from the high voltage harness to the transformer's X1 termination. The male quick connect on BLK1 attaches to the black wire on the controller's harness coming out from the controller's "L2."
    b. For 50GCQ, 549K, and RHW units only: Connect BLK1 wire female quick connect from high voltage harness to terminal 2 on the outdoor fan on relay (OFO). The male quick connect on BLK1 attaches to the black wire on the controller's harness coming out from the controller's "L2." Connect a field-supplied black wire from terminal 4 on the outdoor fan on relay to the transformer's X1 termination.
7. Connect YEL2 wire female quick connect to the condenser motor's capacitor in the control box. The male quick connect on YEL2 attaches to the yellow wire on the controller's harness coming out from the controller's "L1."
8. Connect BLK3 wire male quick connect to the outdoor fan relay terminal 4. The female quick connect on BLK3 attaches to the black wire on the controller's harness that comes out from the controller's "MTR2."
9. Disconnect the yellow wire from the compressor contactor terminal 23 (item C1 in Fig. 7) and connect to transformer X4 termination using a field-supplied yellow wire as shown in Fig. 17 or 18.

230-V AND 460-V UNITS ONLY

See Fig. 19, 20 and 21 for 230-v units and Fig. 15, 16 and 22 for 460-v units.

1. Follow steps 1 through 7 in the section "For 230-v, 460-v, and 575-v Units" on this page.
2. Use high voltage harness 48TCHSRATHHA10 for all units (see Fig. 2). Route harness into the control box through the high voltage path (see Fig. 4).
3.
    a. For 48/50GC, 581K/551K, and RGW/RAW units only: Connect BLK1 wire female quick connect from high voltage harness to the compressor contactor terminal 21. The male quick connect on BLK1 attaches to the black wire on the controller's harness coming out from the controller's "L2."
    b. For 50GCQ, 549K, and RHW units with standard controls only: Connect BLK1 wire female quick connect from high voltage harness to the OFM terminal on the defrost board. The male quick connect on BLK1 attaches to the black wire on the controller's "L2."
    c. For 50GCQ, 549K, and RHW units with SystemVu only: Connect BLK1 wire female quick connect from high voltage harness to terminal 2 on the outdoor fan on relay (OFO). The male quick connect on BLK1 attaches to the black wire on the controller's harness coming out from the controller's "L2."
4. Connect YEL2 wire female quick connect to the condenser motor's capacitor in the control box. The male quick connect on YEL2 attaches to the yellow wire on the controller's harness exiting "L1" on the controller. Remove the controller's cover and switch L1 quick connect from 230-v to 460-v L1if using a 460-v unit.
5. Connect BLK3 wire male quick connect to the outdoor fan relay terminal 4. The female quick connect on BLK3 attaches to the black wire on the controller's harness exiting "MTR2" on the controller.

IMPORTANT: When installing 460-v units, the YEL quick connect on the head pressure controller needs to be switched from 230-v on the L1 connection. See Fig. 15, 16 and 22 for the wiring schematic.

FINAL STEPS FOR 230-V, 460-V, 575-V UNITS

IMPORTANT: When installing heat pump units, the following modifications must be made. Locate the low ambient relay on the back of the controller bracket. Remove the red wire from the terminal 8 and the violet wire from terminal 7. Swap them so that the red wire connects to the terminal 7 and the violet wire connects to terminal 8. (See Fig. 23).

1. Using low voltage harness 48TCHSRATHHA00 for all units (see Fig. 3). Route harness into control box (see Fig. 4). See. Fig. 23 and 24 for connections.)
2.
   a. For units with standard controls only: Connect the red and brown piggyback connectors to the central terminal board in the control box. Red connects to R and brown connects to C.
   b. For 48/50GC, 581K/551K, and RGW/RAW units with SystemVu only: Connect the red wire to terminal 4 on terminal board 4. Connect the brown wire to terminal 7 on terminal board 4.
   c. For 50GCQ, 549K, and RHW units with SysytemVu only: Connect the red wire to the 24V terminal on transformer 3. Connect the brown wire to the common terminal on transformer 3.
3. Connect red and brown wire male quick connects to the controller's harness (red connects to temperature switch and brown connects to the low ambient relay).
4. Install the controller's sensor (Reference 14 in Table 1) on the outdoor condenser coil. Refer to Fig. 25 for 48/50GC, 581K/551K, and RGW/RAW units. Refer to Fig. 26 for 50GCQ, 549K, and RHW units. When installing the sensor, use 2-in. insulation tape (PF01-84) and wire tie (HY76TB125) to secure the sensor to the coil header.
5.
   a. For 48/50GC, 581K/551K, and RGW/RAW units with standard controls only: On the low voltage harness, the pink wire and pink/black wire are unused. Insulate the connection ends of the pink and pink/black wires on the controller's harness.
   b. For 50GCQ, 549K, and RHW units with standard controls only: Connect the pink/black wire to red power wire attached to the central terminal board R (2-in-1 connection). Connect the pink/black female quick connect to the controller's harness. Connect the pink wire female quick connect to the loose yellow wire's male quick connect attached to pin 9 on the UCB Reheat/HP plug. Connect the pink male quick connect to the pink wire on the controller's harness.

NOTE: On 4 ton heat pump units only, there is an additional yellow wire connected to pin 9.

   c. For 48/50GC, 581K/551K, and RGW/RAW units with SystemVu only: Connect pink female quick connect to pink jumper wire on pin 4 on J3D, and connect pink male quick connect to the controller's harness. The pink/black wire is unused, so insulate the pink/black wire on the controller's harness.
   d. For 50GCQ, 549K, and RHW units with SystemVu only: Connect pink/black wire to the red 24V transformer wire (2-in-1 connection), and connect pink/black female quick connect to the controller's harness. Connect pink female quick connect to yellow jumper wire on pin2 on J3D, and connect pink male quick connect to the controller's harness.

NOTE: On 4 ton heat pump units only, there is an additional yellow wire connected to pin 2.

6. Install the winter start accessory kit CRWINSTR001A00 per that kit's instructions.
7. Fabricate and install wind baffles. Refer to pages 17 to 18.
8. For units with SystemVu, configure unit to adjust the outdoor air lockout temperature. When the unit is powered up, go to ***Settings → Unit Configurations → Cooling → Low Ambient → Cir.A Lockout OAT.*** The default value of the Circuit A Lockout Temperature is 40. Change this value to 0 so the unit can operate correctly with low ambient controls.

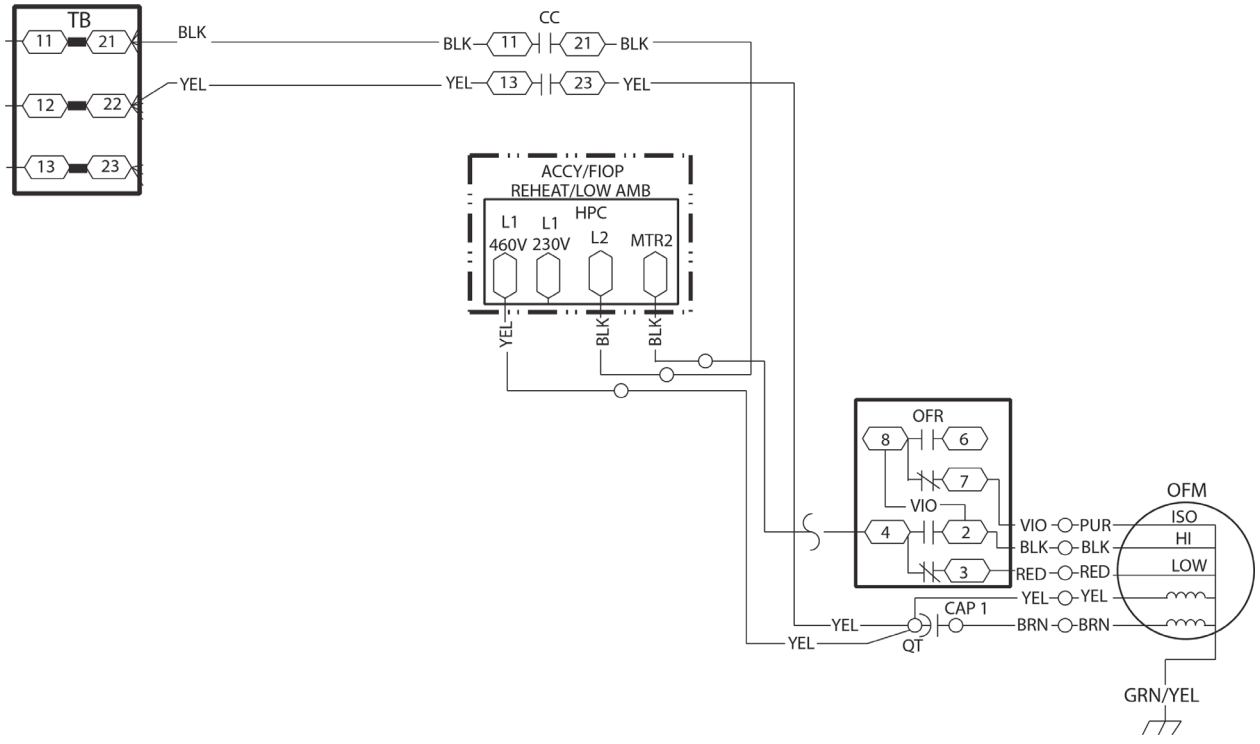

Fig. 15 — Wiring for 48/50GC, 581K/551K, RGW/RAW Units (460-v)

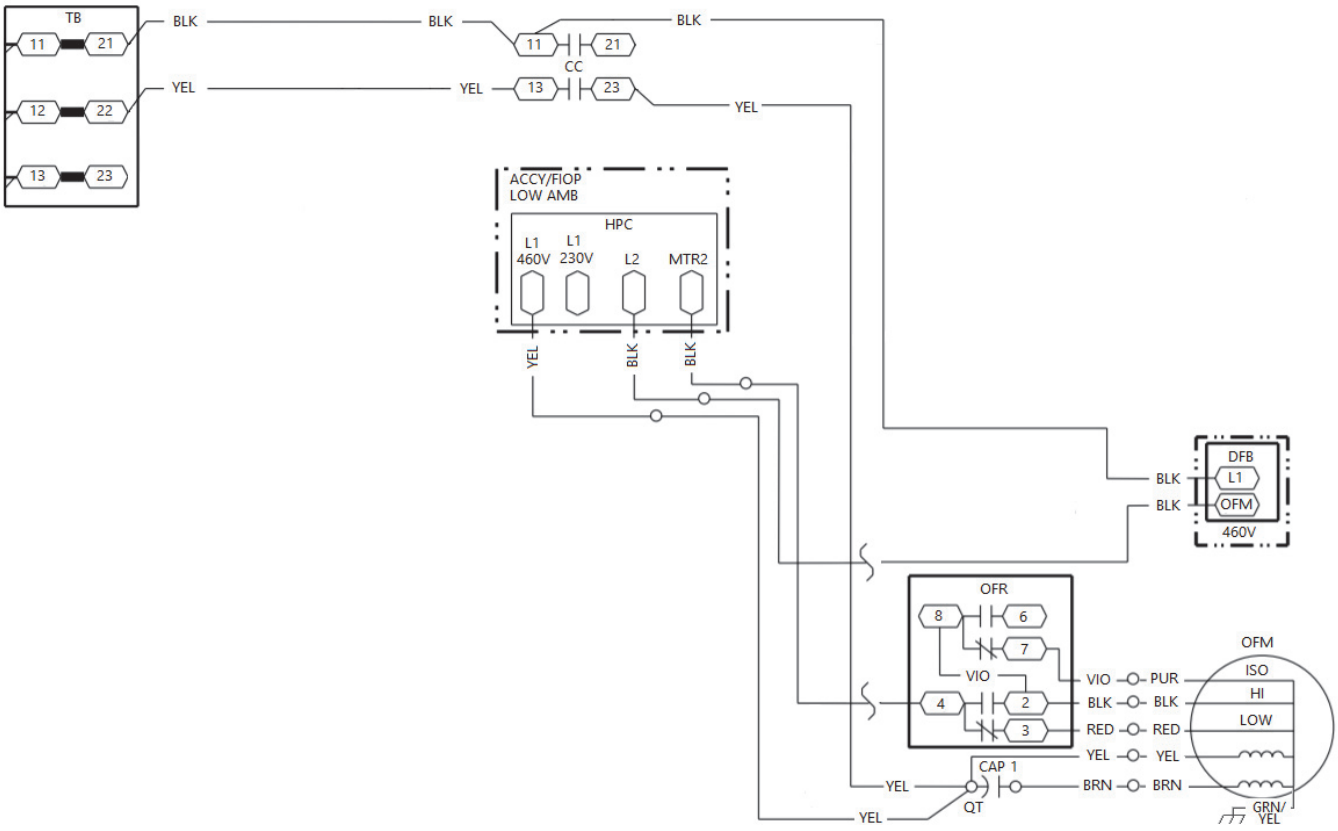

Fig. 16 — Wiring for 50GCQ, 549K, RHW Units (460-v)

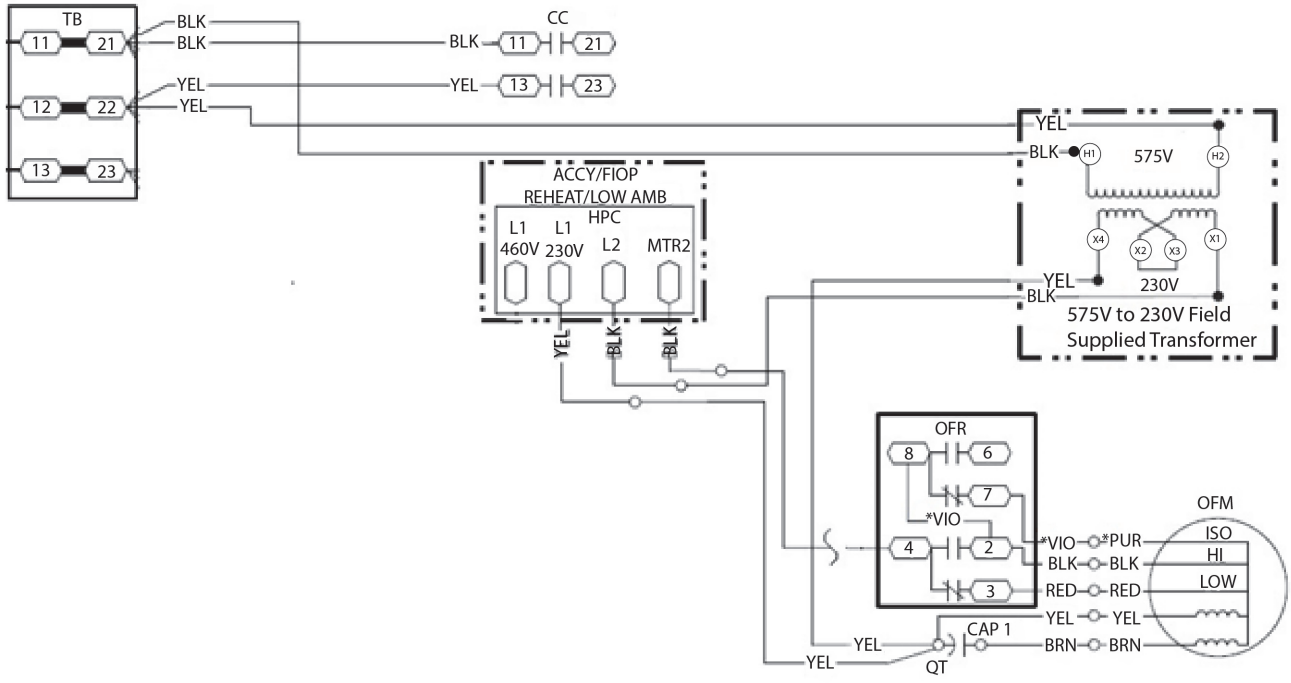

*For 575V units: the condenser motor will be replaced with a 230V motor. The 230V motor does not utilize the purple wire. It will not be included in the 230V motor harness. Remove VIO wire from the outdoor fan relay connecting terminal 8 and 2. Remove the VIO wire lead from terminal 7.

Fig. 17 — Wiring for 48/50GC, 581K/551K, RGW/RAW Units (575-v)

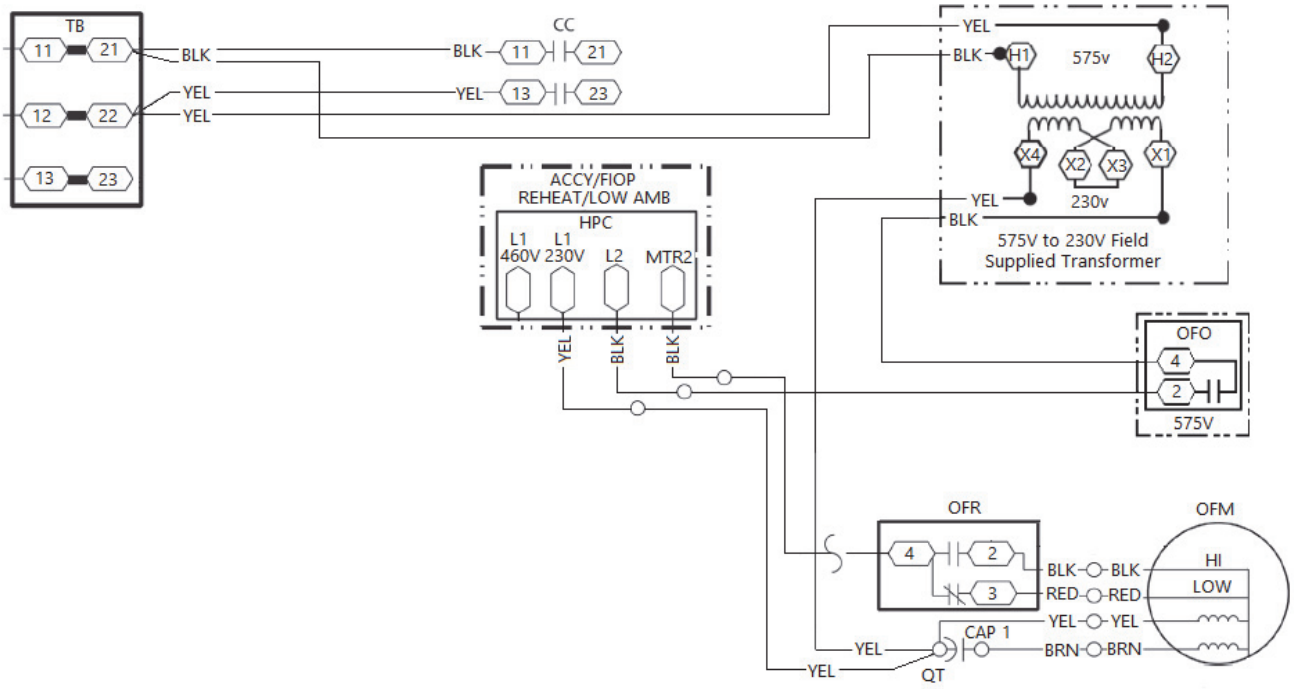

Fig. 18 — Wiring for 50GCQ, 549K, RHW Units (575-v)

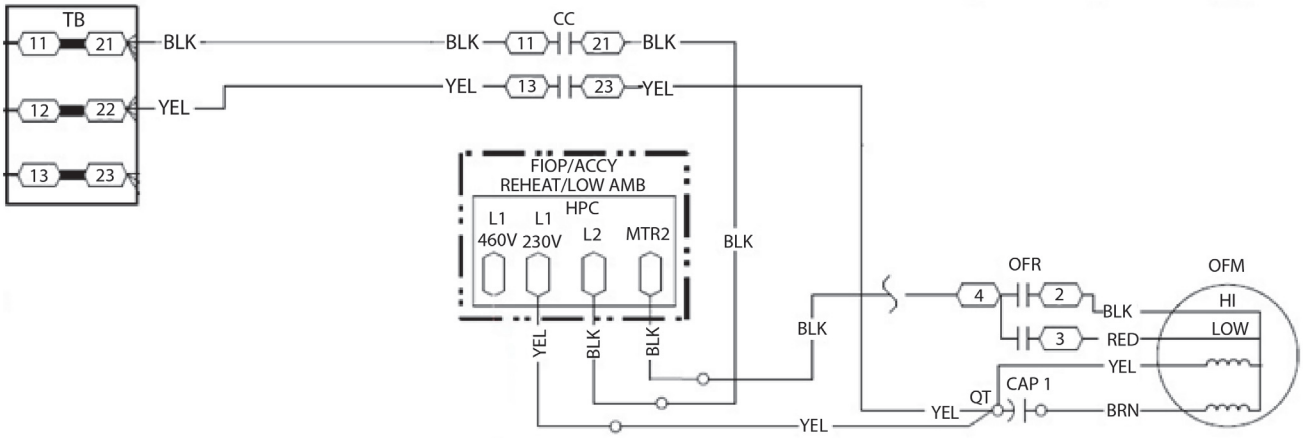

Fig. 19 — Wiring for 48/50GC, 581K/551K, RGW/RAW Units (230-v)

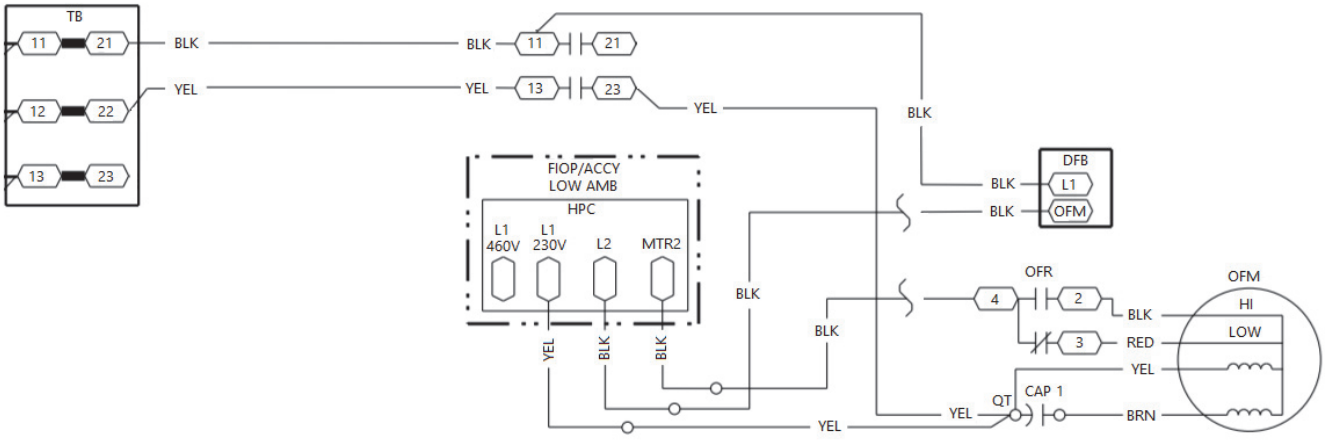

Fig. 20 — Wiring for 50GCQ, 549K, RHW Units (230-v)

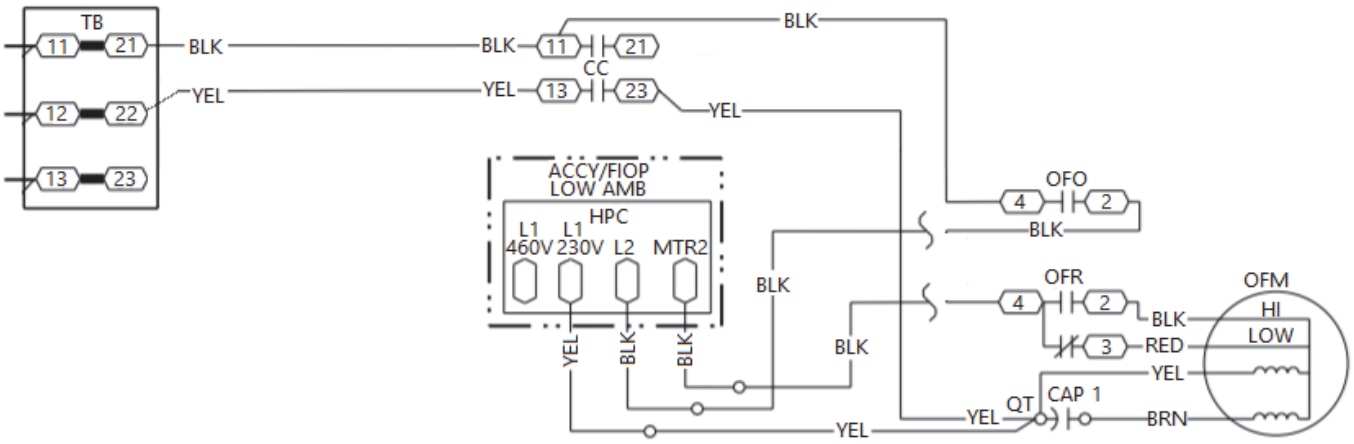

Fig. 21 — Wiring for 50GCQ, 549K, RHW Units with SystemVu (230-v)

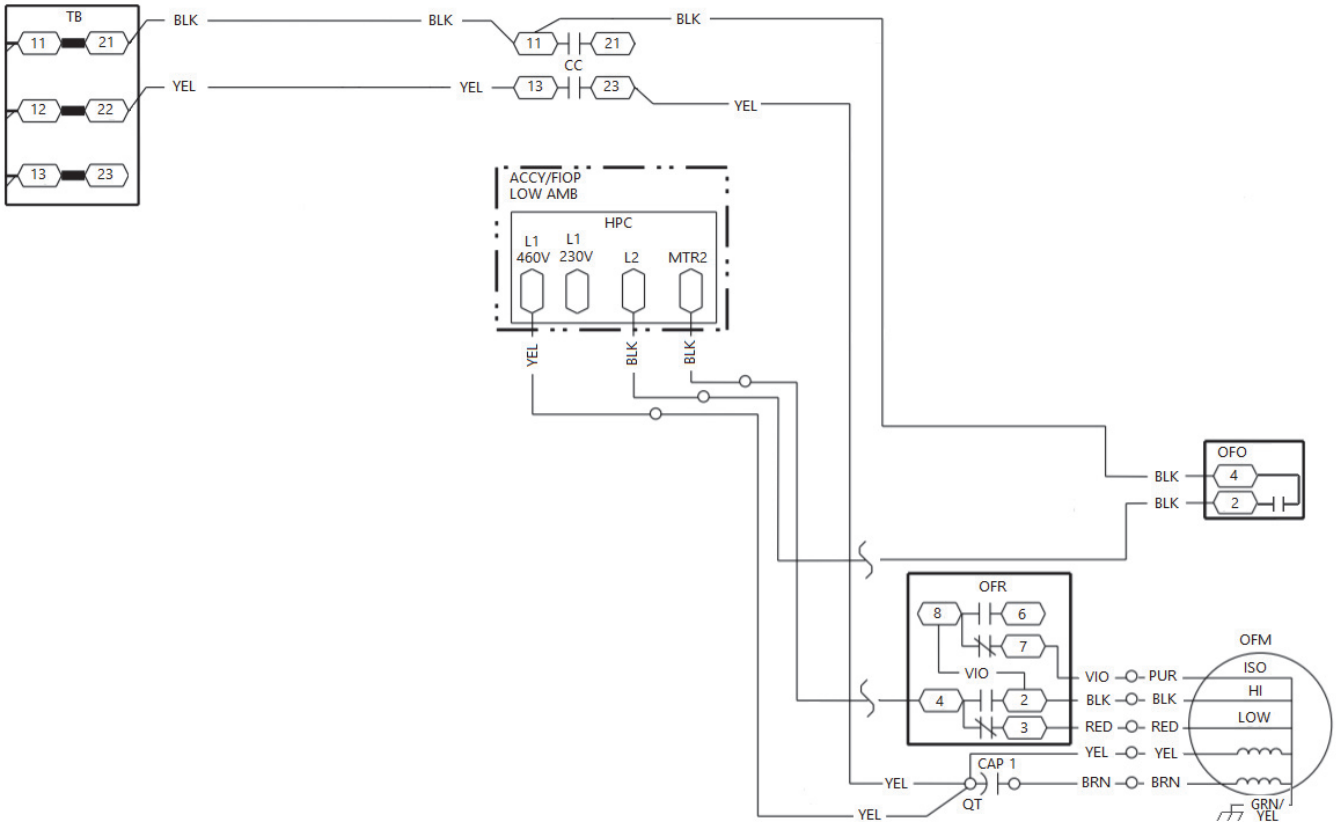

Fig. 22 — Wiring for 50GCQ, 549K, RHW Units with SystemVu (460-v)

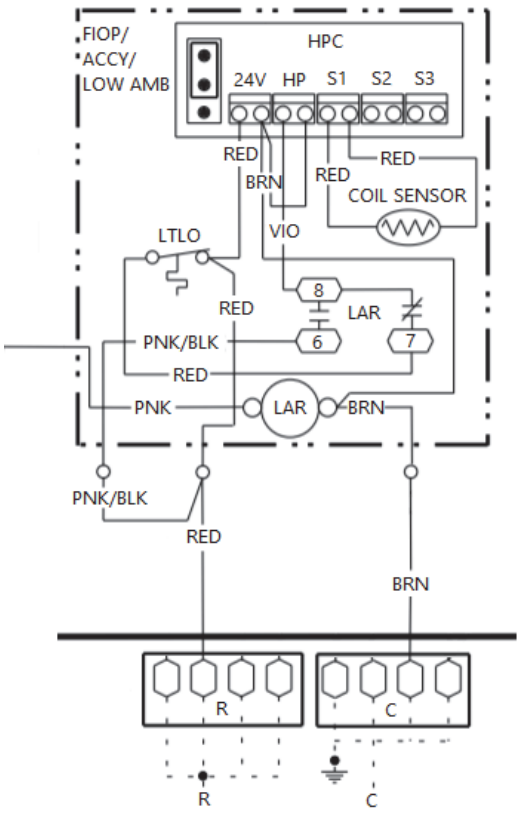

Fig. 23 — Controls Wiring Diagram for 50GCQ, 549K, RHW Units

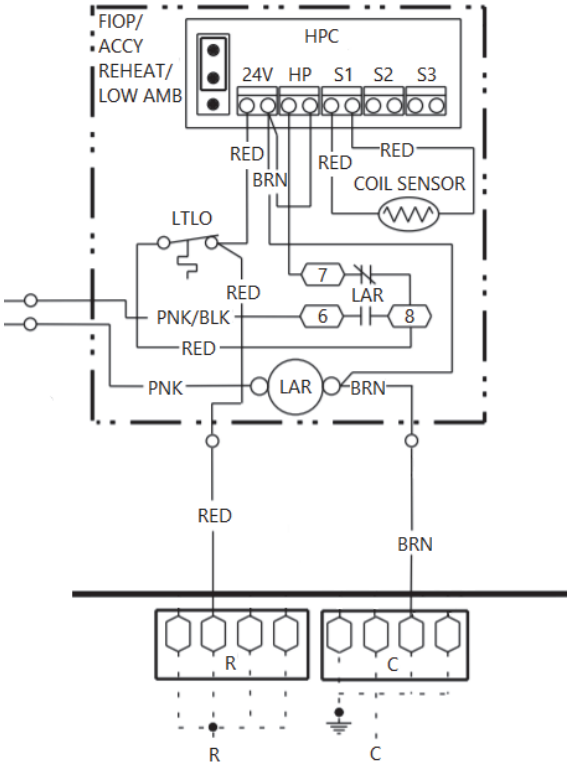

Fig. 24 — Controls Wiring Diagram for 48/50GC, 581K/551K, RGW/RAW Units

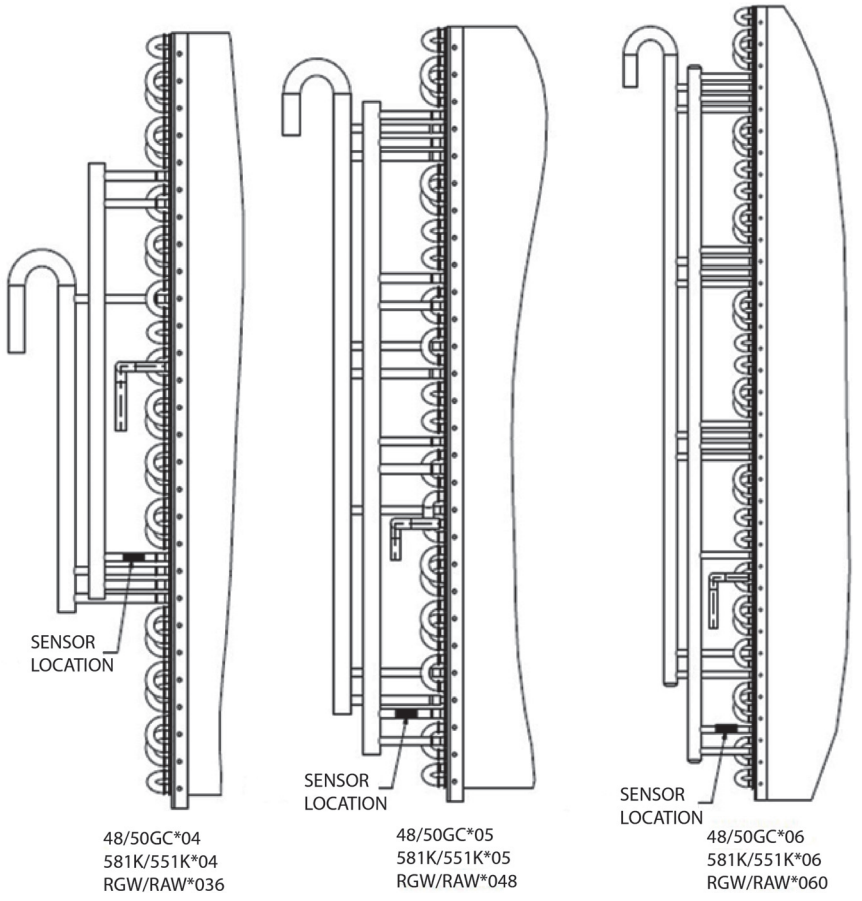

Fig. 25 — Sensor Locations for 48/50GC, 581K/551K, RGW/RAW Units

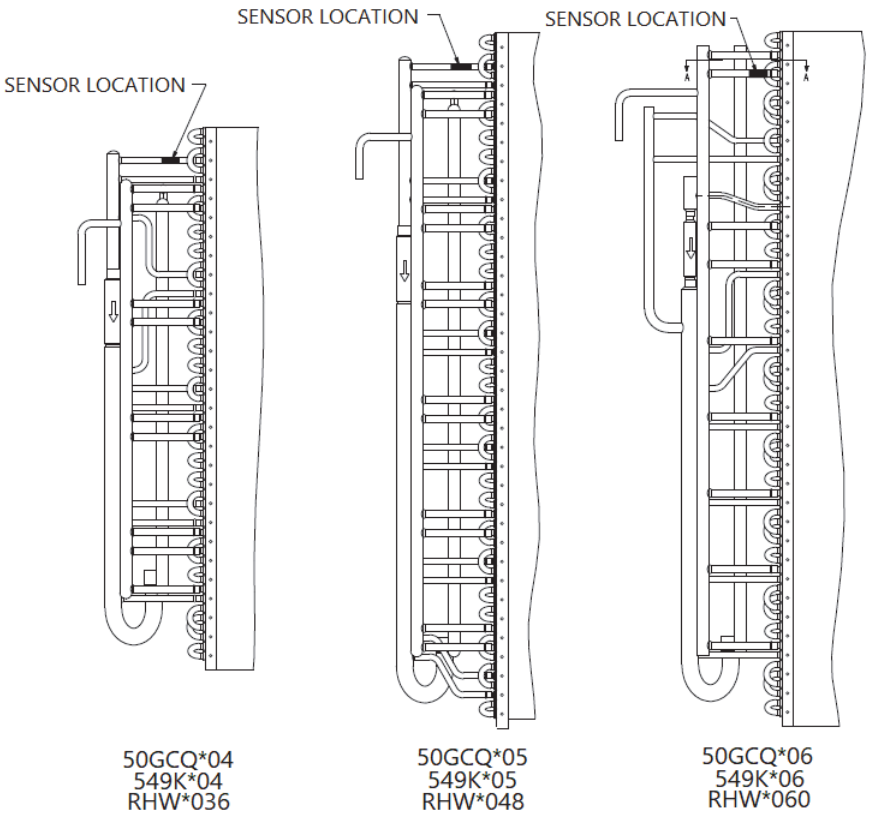

Fig. 26 — Sensor Locations for 50GCQ, 549K, RHW Units

FABRICATE WIND BAFFLES

Wind baffles are required to prevent wind cross-currents from causing abnormally low condensing temperatures. Fabricate sheet metal baffles using Tables 4-7 as shown in Fig. 27. Use 20-gage sheet metal for the baffle material. Refer to Tables 4-7 for wind baffle dimensions according to unit type and size.

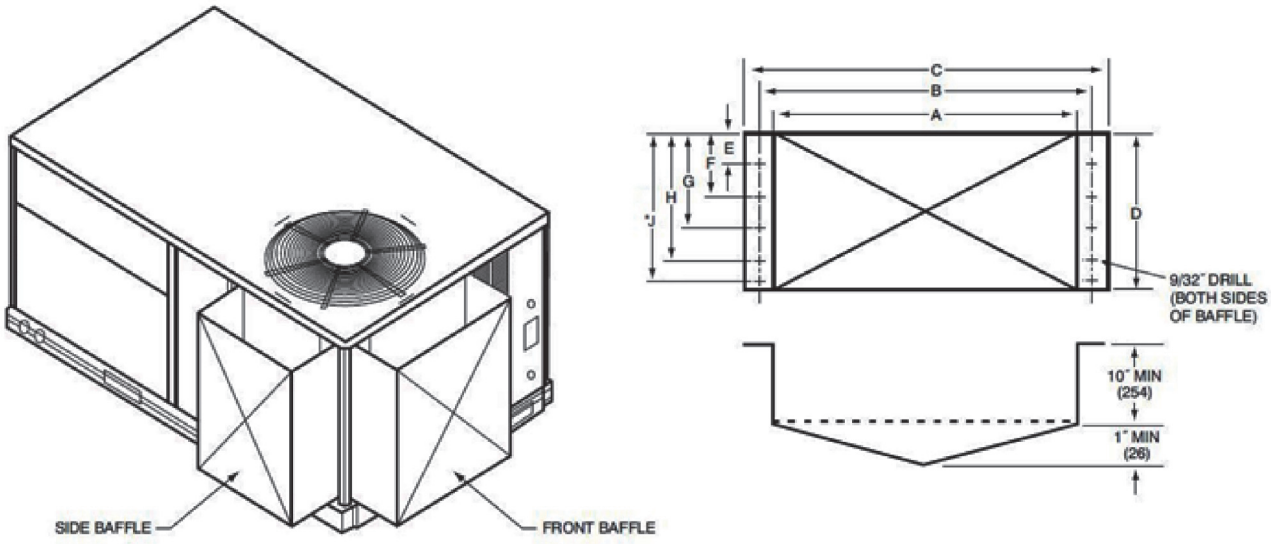

Fig. 27 — Template for Wind Baffle Fabrication

Table 4 — Wind Baffle Dimensions (48/50FC, 582K/559K, RGV/RAV Units)

UNIT	SIZE	FRONT BAFFLE - in. (mm)								
		A	B	C	D	E	F	G	H	J
48/50FC 582K/559K RGV/RAV	04 (036)	28 5/8 (728)	29 1/8 (740)	29 5/8 (753)	27 1/4 (692)	4 1/4 (108)	11 1/4 (286)	18 1/4 (464)	25 1/4 (641)	N/A
	05 (048)	32 5/8 (830)	33 1/8 (841)	33 5/8 (854)	27 1/4 (692)	4 1/4 (108)	11 1/4 (286)	18 1/4 (464)	25 1/4 (641)	N/A
	06 (060)	32 5/8 (830)	33 1/8 (841)	33 5/8 (854)	27 1/4 (692)	4 1/4 (108)	11 1/4 (286)	18 1/4 (464)	25 1/4 (641)	N/A
	07 (072)	28 5/8 (728)	29 1/8 (740)	29 5/8 (753)	35 3/8 (899)	4 1/4 (108)	11 1/4 (286)	18 1/4 (464)	25 1/4 (641)	32 1/4 (819)
UNIT	SIZE	SIDE BAFFLE - in. (mm)								
		A	B	C	D	E	F	G	H	J
48/50FC 582K/559K RGV/RAV	04 (036)	20 7/8 (530)	21 3/8 (543)	21 7/8 (556)	27 1/4 (692)	4 1/4 (108)	11 1/4 (286)	18 1/4 (464)	25 1/4 (641)	N/A
	05 (048)	20 7/8 (530)	21 3/8 (543)	21 7/8 (556)	27 1/4 (692)	4 1/4 (108)	11 1/4 (286)	18 1/4 (464)	25 1/4 (641)	N/A
	06 (060)	20 7/8 (530)	21 3/8 (543)	21 7/8 (556)	27 1/4 (692)	4 1/4 (108)	11 1/4 (286)	18 1/4 (464)	25 1/4 (641)	N/A
	07 (072)	20 7/8 (530)	21 3/8 (543)	21 7/8 (556)	35 3/8 (899)	4 1/4 (108)	11 1/4 (286)	18 1/4 (464)	25 1/4 (641)	32 1/4 (819)

Table 5 — Wind Baffle Dimensions (48/50GC, 581K/551K, RGW/RAW Units)

UNIT	SIZE	FRONT BAFFLE - in. (mm)								
		A	B	C	D	E	F	G	H	J
48/50GC 581K/551K RGW/RAW	04 (036)	28 5/8 (728)	29 1/8 (740)	29 5/8 (753)	27 1/4 (692)	4 1/4 (108)	11 1/4 (286)	18 1/4 (464)	25 1/4 (641)	N/A
	05 (048)	32 5/8 (830)	33 1/8 (841)	33 5/8 (854)	27 1/4 (692)	4 1/4 (108)	11 1/4 (286)	18 1/4 (464)	25 1/4 (641)	N/A
	06 (060)	28 5/8 (728)	29 1/8 (740)	29 5/8 (753)	35 3/8 (899)	4 1/4 (108)	11 1/4 (286)	18 1/4 (464)	25 1/4 (641)	32 1/4 (819)
UNIT	SIZE	SIDE BAFFLE - in. (mm)								
		A	B	C	D	E	F	G	H	J
48/50GC 581K/551K RGW/RAW	04 (036)	20 7/8 (530)	21 3/8 (543)	21 7/8 (556)	27 1/4 (692)	4 1/4 (108)	11 1/4 (286)	18 1/4 (464)	25 1/4 (641)	N/A
	05 (048)	20 7/8 (530)	21 3/8 (543)	21 7/8 (556)	27 1/4 (692)	4 1/4 (108)	11 1/4 (286)	18 1/4 (464)	25 1/4 (641)	N/A
	06 (060)	20 7/8 (530)	21 3/8 (543)	21 7/8 (556)	35 3/8 (899)	4 1/4 (108)	11 1/4 (286)	18 1/4 (464)	25 1/4 (641)	32 1/4 (819)

Table 6 — Wind Baffle Dimensions (50FCQ, 547K, RHV Units)

UNIT	SIZE	FRONT BAFFLE - in. (mm)								
		A	B	C	D	E	F	G	H	J
50FCQ 547K RHV	04 (036)	28 5/8 (728)	29 1/8 (740)	29 5/8 (753)	27 1/4 (692)	4 1/4 (108)	11 1/4 (286)	18 1/4 (464)	25 1/4 (641)	N/A
	05 (048)	32 5/8 (830)	33 1/8 (841)	33 5/8 (854)	27 1/4 (692)	4 1/4 (108)	11 1/4 (286)	18 1/4 (464)	25 1/4 (641)	N/A
	06 (060)	32 5/8 (830)	33 1/8 (841)	33 5/8 (854)	35 3/8 (899)	4 1/4 (108)	11 1/4 (286)	18 1/4 (464)	25 1/4 (641)	N/A
	07 (072)	32 5/8 (830)	33 1/8 (841)	33 5/8 (854)	35 3/8 (899)	4 1/4 (108)	11 1/4 (286)	18 1/4 (464)	25 1/4 (641)	32 1/4 (819)
UNIT	SIZE	SIDE BAFFLE - in. (mm)								
		A	B	C	D	E	F	G	H	J
50FCQ 547K RHV	04 (036)	20 7/8 (530)	21 3/8 (543)	21 7/8 (556)	27 1/4 (692)	4 1/4 (108)	11 1/4 (286)	18 1/4 (464)	25 1/4 (641)	N/A
	05 (048)	20 7/8 (530)	21 3/8 (543)	21 7/8 (556)	27 1/4 (692)	4 1/4 (108)	11 1/4 (286)	18 1/4 (464)	25 1/4 (641)	N/A
	06 (060)	20 7/8 (530)	21 3/8 (543)	21 7/8 (556)	35 3/8 (899)	4 1/4 (108)	11 1/4 (286)	18 1/4 (464)	25 1/4 (641)	N/A
	07 (072)	20 7/8 (530)	21 3/8 (543)	21 7/8 (556)	35 3/8 (899)	4 1/4 (108)	11 1/4 (286)	18 1/4 (464)	25 1/4 (641)	32 1/4 (819)

Table 7 — Wind Baffle Dimensions (50GCQ, 549K, RHW Units)

UNIT	SIZE	FRONT BAFFLE - in. (mm)								
		A	B	C	D	E	F	G	H	J
50GCQ 549K RHW	04 (036)	28 5/8 (728)	29 1/8 (740)	29 5/8 (753)	27 1/4 (692)	4 1/4 (108)	11 1/4 (286)	18 1/4 (464)	25 1/4 (641)	N/A
	05 (048)	32 5/8 (830)	33 1/8 (841)	33 5/8 (854)	35 3/8 (899)	4 1/4 (108)	11 1/4 (286)	18 1/4 (464)	25 1/4 (641)	N/A
	06 (060)	32 5/8 (830)	33 1/8 (841)	33 5/8 (854)	35 3/8 (899)	4 1/4 (108)	11 1/4 (286)	18 1/4 (464)	25 1/4 (641)	32 1/4 (819)
UNIT	SIZE	SIDE BAFFLE - in. (mm)								
		A	B	C	D	E	F	G	H	J
50GCQ 549K RHW	04 (036)	20 7/8 (530)	21 3/8 (543)	21 7/8 (556)	27 1/4 (692)	4 1/4 (108)	11 1/4 (286)	18 1/4 (464)	25 1/4 (641)	N/A
	05 (048)	20 7/8 (530)	21 3/8 (543)	21 7/8 (556)	35 3/8 (899)	4 1/4 (108)	11 1/4 (286)	18 1/4 (464)	25 1/4 (641)	N/A
	06 (060)	20 7/8 (530)	21 3/8 (543)	21 7/8 (556)	35 3/8 (899)	4 1/4 (108)	11 1/4 (286)	18 1/4 (464)	25 1/4 (641)	32 1/4 (819)

© Carrier 2023