290VAN
Evolution™ Extreme Variable Speed Heat Pump with Puron Advance™ (R-454B) Refrigerant
2 to 5 Nominal Tons

PRODUCT DATA



Bryant's 290VANEvolution® Extreme is another breakthrough product providing up to 9.5 HSPF2 heating efficiency and up to 20 SEER2 cooling efficiency. The variable speed capacity control results in strong heating capacity as the outdoor temperature drops resulting in less reliance on auxiliary heat. Lower speed operation is available when needed in cooling, for enhanced comfort and dehumidification.

This product has been designed and manufactured to meet Energy Star® criteria for energy efficiency when matched with appropriate coil components. Refer to the AHRI directory (www.ahridirectory.org) for the most up-to-date ratings information.

Industry leading Features / Benefits

Energy Efficiency
- Up to 20 SEER2, 11.5 EER2, 9.5 HSPF2
- Microtube Technology™ refrigeration system
- Indoor air quality accessories available

Sound
- Sound level as low as 54 dBA in low speed

Comfort
- Variable speed compressor with capacity range from 20-100%
- Air cooled variable speed drive
  - Evolution™ Connex™ System Control required
  - Energy Tracking capability with the Evolution™ Connex™ System Control and latest software version
    (Energy Tracking has the ability to monitor and estimate the energy consumption of your Evolution™ system.)

Reliability
- Non-ozone depleting, low global warming potential Puron Advance™ refrigerant
- High pressure switch
- Suction and discharge pressure transducer
- Electronic expansion valve (EXV) for optimum heating performance
- Filter drier
- Internal compressor stator heat standard
- Balanced refrigeration system for maximum reliability

Flexibility and Installation:
- Vertex™ Technology compatible
- 2 control wires to outdoor unit
- Minimum and maximum airflow adjustments
- Compressor heating capacity control
- Hybrid Heat™ Dual Fuel capable

Durability
DuraGuard™ Protection Package:
- Solid, durable sheet metal construction
- Steel louver coil guard
- Baked-on, complete outer coverage, powder paint

Applications
- Heating mode operation down to -11°F (-23.9°C) outdoor ambient temperature.
- Cooling mode operation up to 125°F (51.7°C) outdoor ambient temperature.
- Long-line - up to 200 feet (61.0 m) equivalent length, up to 100 feet (30.5 m) condenser above evaporator, or up to 80 ft (24.4 m) evaporator above condenser (See Long Line Guide for more information.)
- Low ambient cooling down to 0°F (-17.8°C) when enabled with the Evolution™ Connex™ System Control.

Model Number Nomenclature

1	2	3	4	5	6	7	8	9	10	11	12	13
N	N	N	A	A/N	N	N	N	N	A/N	A/N	N	A
2	**9**	**0**	**V**	**A**	**N**	**0**	**2**	**4**	**0**	**0**	**A**	**A**
OD Type	Refrigerant & Tier	SEER2	OD Design Type	Major Series	Voltage	Open	Nominal Cooling Capacity		Feature	Special Feature	Variation	Minor Series
2 = HP	9=R-454B Evolution	0 = 20 SEER2	V = Variable Speed	A = Original Series	N = 208-230-1		1,000 Nominal Btuh		0=Standard	0=Standard	A = Standard HP	A = Original Series

Use of the AHRI Certified TM Mark indicates a manufacturer's participation in the program For verification of certification for individual products, go to www.ahridirectory.org.

Quality ISO 9001

CATALOG ORDERING NUMBERS

Size	Model Number
24	290VAN02400A
36	290VAN03600A
48	290VAN04800A
60	290VAN06000A

STANDARD FEATURES

FEATURES	Unit Size			
	24	**36**	**48**	**60**
Puron Advance™ (R-454B) Refrigerant	X	X	X	X
Air-Cooling Variable Frequency Drive	X	X	X	X
Louvered Coil Guard	X	X	X	X
Factory Provided, Field-Installed Filter Drier	X	X	X	X
Front-Seating Service Valves	X	X	X	X
In-unit Pressure and Temperature Protection	X	X	X	X
Suction and Discharge Pressure Transducers	X	X	X	X
High Pressure Switch	X	X	X	X
Compressor Stator Heat	X	X	X	X
Utility Interface Connections	X	X	X	X
Bluetooth® Module	X	X	X	X
Energy Tracking Capability	X	X	X	X
Sound Blanket	X	X	X	X
Outdoor Air Temperature Sensor	X	X	X	X
Long Line Capability	X	X	X	X

X = Standard

AHRI RATINGS

NOTE: Ratings contained in this document are subject to change at any time.

For AHRI ratings certificates, please refer to the AHRI directory www.ahridirectory.org
Additional ratings and system combinations can be accessed via the Ratings Database here: MyBryantRatings

MIN/MAX AIRFLOW TABLES

The indoor airflow delivered by this system varies significantly based on outdoor temperature, indoor unit combination, and system demand. The airflows on these tables are for duct design considerations.

Duct systems capable of these ranges will ensure the system will deliver full capacity at all outdoor temperatures.
Minimum and maximum airflows can be adjusted from these numbers in the Evolution™ Connex™ System Control Heat Pump Setup screen.

Size	Cooling - Comfort Mode		Cooling - Efficiency Mode	
	Max Airflow	Min Airflow	Max Airflow	Min Airflow
24	650	300	900	485
36	900	400	1200	525
48	1150	500	1350	750
60	1700	500	1950	780

Size	Heating - Comfort Mode		Heating - Efficiency Mode	
	Max Airflow	Min Airflow	Max Airflow	Min Airflow
24	700	500	900	500
36	1000	550	1200	550
48	1450	800	1450	800
60	1750	700	1850	700

PHYSICAL DATA

UNIT SIZE	24	36	48	60
COMPRESSOR TYPE	Variable Speed Rotary			
REFRIGERANT	Puron Advance™ (R-454B)			
Charge lb* (kg)	4.9 (2.2)	6.7 (3.0)	7.9 (3.6)	8.2 (3.7)
Outdoor Htg Exp. Device	EXV	EXV	EXV	EXV
COND FAN	Forward Swept Propeller Type, Direct Drive			
Air Discharge	Vertical			
Maximum Air Qty (CFM)	2570	4190	5250	5250
Motor HP	1/5	1/3	1/3	1/3
Motor RPM	200-1000	200-850	200-825	200-825
COND COIL				
Face Area (sq ft.)	12.5	19.4	27.6	27.6
Fins per In.	20	20	20	20
Rows	1	1	1	1
Circuits	5	6	11	11
VALVE CONNECT. (In. ID)				
Vapor	3/4	3/4	7/8	7/8
Liquid	3/8			
REFRIGERANT TUBES† (In. OD)				
Rated Vapor†	3/4	7/8	7/8	1 - 1/8
Max Rated Liquid Line‡	3/8			

*.For 15 ft. lineset
†.Units are rated with 25 ft (7.6 m) of lineset length. See Vapor Line Sizing and Cooling Capacity Loss table when using other sizes and lengths of lineset.
‡.See Liquid Line Sizing For Cooling Only Systems with Puron Advance™ Refrigerant tables.
Note: See unit Installation Instruction for proper installation.

ELECTRICAL DATA

UNIT SIZE	V-PH	OPER VOLTS*		COMPR		FAN	MCA	MAX FUSE† or CKT BRK AMPS	SCCR
		MAX	MIN	MRC	RLA	FLA			
24	208-230-1	253	197	25	11.7	0.70	19.4	25	5kA rms
36				25	17.5	0.88	22.9	30	5kA rms
48				35	22.6	0.88	30.6	40	5kA rms
60				35	27.2	0.88	36.9	50	5kA rms

*. Permissible limits of the voltage range at which the unit will operate satisfactorily
†. Time-Delay fuse.
FLA - Full Load Amps, **MCA**-Minimum Circuit Amps, **MRC** - Maximum Rated Current**, RLA**-Rated Load Amps, **SCCR** - Short-Circuit Current Rating
NOTE: Control circuit is 24-V on all units and requires external power source. Copper wire must be used from service disconnect to unit.
All motors/compressors contain internal overload protection.

Manufacturer reserves the right to change, at any time, specifications and designs without notice and without obligations.

REFRIGERANT PIPING LENGTH LIMITATIONS

Maximum Line Lengths:

The maximum allowable total equivalent length for Heat Pumps varies depending on the vertical separation. See the tables below for allowable lengths depending on whether the outdoor unit is on the same level, above or below the outdoor unit.

Maximum Line Lengths for Heat Pump Applications

	MAXIMUM ACTUAL LENGTH* ft (m)	MAXIMUM EQUIVALENT LENGTH† ft (m)	MAXIMUM VERTICAL SEPARATION ft (m)
Units on equal level	200 (61.0)	200 (61.0)	N/A
Outdoor unit ABOVE indoor unit	200 (61.0)	200 (61.0)	100 (30.5)
Outdoor unit BELOW indoor unit	200 (61.0)	200 (61.0)	80 (24.4)

*. Maximum actual length not to exceed 200 ft (61 m)
†. Total equivalent length accounts for losses due to elbows or fitting. See the Long Line Guideline for details.

LONG LINE APPLICATIONS

An application is considered Long Line when the refrigerant level in the system requires the use of accessories to maintain acceptable refrigerant management for systems reliability. 290VANheat pumps do not require any additional accessories for long line applications.
Defining a system as long line depends on the liquid line diameter, actual length of the tubing, and vertical separation between the indoor and outdoor units.

For heat pump systems, the chart below shows when an application is considered Long Line.

Refrigerant Long Line Description ft (m)

Liquid Line Size	Units On Same Level ft (m)	Outdoor Above Indoor ft (m)	Outdoor Below Indoor ft (m)
3/8	80 (24.4)	80 (24.4)	20 (6.1) vertical or 80 (24.4) total

NOTE: See Long Line Guideline for details

COOLING CAPACITY LOSS TABLE

Nominal Size (Btuh)	Line OD (in)	Cooling Capacity Loss (%) Equivalent Length (ft)								
		25	50	75	80	100	125	150	175	200
24000	5/8	0.7	2.0	3.4	2.3	3.3	4.6	5.8	6.9	8.0
	3/4	0.0	0.7	1.4	0.2	0.8	1.4	2.1	2.7	3.3
36000	5/8	1.6	3.8	5.9	6.3	7.8	9.7	11.4	13.0	14.6
	3/4	0.4	1.4	2.4	2.6	3.4	4.4	5.3	6.2	7.1
	7/8	0.0	0.7	1.4	1.5	2.0	2.7	3.3	3.9	4.5
48000	3/4	1.2	2.7	4.0	4.0	5.1	6.4	7.7	9.0	10.2
	7/8	0.5	1.3	2.0	1.9	2.5	3.2	4.0	4.7	5.5
	1 1/8	0.0	—	—	—	—	—	—	—	—
60000	3/4	1.8	3.9	5.8	6.2	7.7	9.5	11.2	12.9	14.5
	7/8	0.8	1.8	2.9	3.1	3.9	5.0	6.1	7.1	8.2
	1 1/8	0.0	—	—	—	—	—	—	—	—

Rated size Line OD and Rated Total Equivalent Length are in **BOLD**.

—= Applications in this range are disallowed

ACCESSORIES

KIT NUMBER	KIT NAME	24	36	48	60
KSASH2801COP	SOUND BLANKET (ACCUMULATOR)	X			
KSASH2901COP	SOUND BLANKET (ACCUMULATOR)		X		
KSASH2601COP	SOUND BLANKET (ACCUMULATOR)			S	S
KSASF0201AAA	SUPPORT FEET	X	X	X	X
KHASS0606MPK	SNOW STAND	X	X	X	X

X = Accessory, S = Standard

ACCESSORY USAGE GUIDELINE

ACCESSORY	REQUIRED FOR LOW-AMBIENT COOLING APPLICATIONS (Below 55°F/12.8°C)	REQUIRED FOR LONG LINE APPLICATIONS (Over 80 ft/24.38 m)	REQUIRED FOR SEA COAST APPLICATIONS (Within 2 miles/3.22 km)
Compressor Stator Heat	Standard with Evolution™ Connex™ System Control	No	No
Evaporator Freeze Protection	Standard with Evolution™ Connex™ System Control	No	No
Low-Ambient Control	Standard with Evolution™ Connex™ System Control	No	No
Support Feet	Recommended	No	Recommended
Winter Start Control	Standard with Evolution™ Connex™ System Control	No	No

Accessory Description and Usage

Snow Stand

Coated wire rack which supports unit 18 in. (457.2 mm) above mounting pad to allow for drainage from unit base.

Usage Guideline:

Suggested in the following applications:

- Unit installations in heavy snowfall areas.
- Unit installations in snow drift locations.
- Unit installations in areas of prolonged subfreezing temperatures.
- All commercial installations.

Sound Blanket (Accumulator)

Wraparound sound reducing cover for the accumulator. Reduces possible transient tones that may resonate in the accumulator due to variability in system operation.

Usage Guideline:

Although all units are designed and tested to eliminate unpleasant tones, in the unlikely event a transient tone is experienced, this sound blanket can reduce the tone by up to 10 dB.

Support Feet

Four or five stick-on plastic feet that raise the unit 4 in. (101.6 mm) above the mounting pad. This allows sand, dirt, and other debris to be flushed from the unit base, minimizing corrosion.

Usage Guideline:

Suggested in the following applications:

Coastal installations.

Windy areas or where debris is normally circulating.

Rooftop installations.

For improved sound ratings.

SOUND POWER LEVEL

Unit Size	Typical Octave Band Spectrum (dB, without tone adjustment)	Min Cooling	Nominal* Cooling	Min Heating	Nominal* Heating
24	Speed	900	4260	960	5100
	125	63	71	63	65
	250	55	66	54	63
	500	54	67	54	61
	1000	51	63	45	55
	2000	46	59	43	52
	4000	40	54	36	52
	8000	43	52	43	53
	Sound Rating (dBA)	56	68	56	71
36	Speed	900	4320	900	4680
	125	65	69	65	74
	250	55	69	55	67
	500	48	70	49	65
	1000	45	66	45	63
	2000	40	60	39	59
	4000	39	59	39	59
	8000	43	55	42	55
	Sound Rating (dBA)	55	72	54	72
48	Speed	900	3780	900	3780
	125	45	48	45	46
	250	38	55	40	55
	500	41	58	45	59
	1000	51	62	44	61
	2000	35	57	37	55
	4000	34	55	33	55
	8000	39	52	40	51
	Sound Rating (dBA)	64	72	56	73
60	Speed	900	4380	960	4440
	125	62	69	63	70
	250	62	72	56	71
	500	54	67	55	66
	1000	51	65	48	63
	2000	44	64	41	65
	4000	38	59	36	66
	8000	42	54	43	60
	Sound Rating (dBA)	58	72	55	73

*. Nominal condition data taken from maximum speed operation at 95°F in cooling and 47°F in heating
NOTE: Tested in compliance with AHRI 270-2015 but not listed with AHRI.

CHARGING SUBCOOLING

UNIT SIZE	MOMINAL SUBCOOLING*	REQUIRED SUBCOOLING °F (°C) - See System Control
24	14	Subcooling recommendation displayed on System Control in Charging Mode must be followed
36	12	
48	5	
60	7	

*. Nominal subcooling targets for use as reference or in specific applications with 25 ft. (7.6 m) lineset, 95°F outdoor ambient, and 80°F/67°F indoor DB/WB.

DIMENSIONS

UNIT	SERIES	ELECTRICAL CHARACTERISTICS				A		B		C		D		E		F		G		H		I		J		K		OPERATING WEIGHT		SHIPPING WEIGHT		SHIPPING LENGTH / WIDTH (Sq.)		SHIPPING HEIGHT	
		208-230-1-60	208/230-3-60	460-3-60	575-3-60	INCH	MM	INCH	MM	INCH	MM	INCH	MM	INCH	MM	INCH	MM	INCH	MM	INCH	MM	INCH	MM	INCH	MM	INCH	MM	Lbs	Kgs	Lbs	Kgs	INCH	MM	INCH	MM
290VA*024*0A	A	Y	N	N	N	23 1/8	587.3	35 1/2	902.0	3/4	19.1	4 7/16	113.0	18 1/16	459.0	7 13/16	197.9	1 1/8	28.2	3 13/16	97.4	10 1/4	260.4	12	304.8	18	457.2	147	66.7	165	74.8	26 1/8	664.0	39 13/16	1011.2
290VA*036*0A	A	Y	N	N	N	31 3/16	792.5	35 1/2	902.0	3/4	19.1	6 9/16	166.1	24 11/16	626.3	9 1/8	231.3	1 1/8	28.2	3 13/16	97.4	14 1/2	368.3	13 3/4	349.3	17 1/8	435.0	203	92.1	231	104.8	34 1/4	870.0	39 13/16	1011.2
290VA*048*0A	A	Y	N	N	N	35	889.0	43 13/16	1112.6	7/8	22.2	6 9/16	166.1	28 7/16	722.8	9 1/8	231.3	1 1/8	28.2	3 13/16	97.4	14 7/8	377.8	16	406.4	20	508.0	287	130.2	318	144.2	38	965.0	47 5/8	1209.4
290VA*060*0A	A	Y	N	N	N	35	889.0	43 13/16	1112.6	7/8	22.2	6 9/16	166.1	28 7/16	722.8	9 1/8	231.3	1 1/8	28.2	3 13/16	97.4	14 7/8	377.8	16	406.4	20	508.0	287	130.2	318	144.2	38	965.0	47 5/8	1209.4

Y=YES
N=NO

NOTES:

1. CENTER OF GRAVITY .

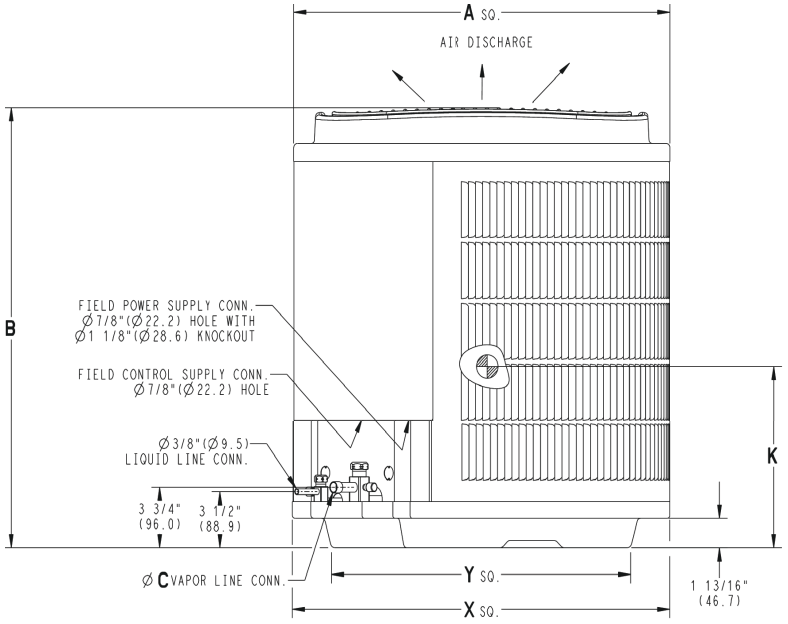

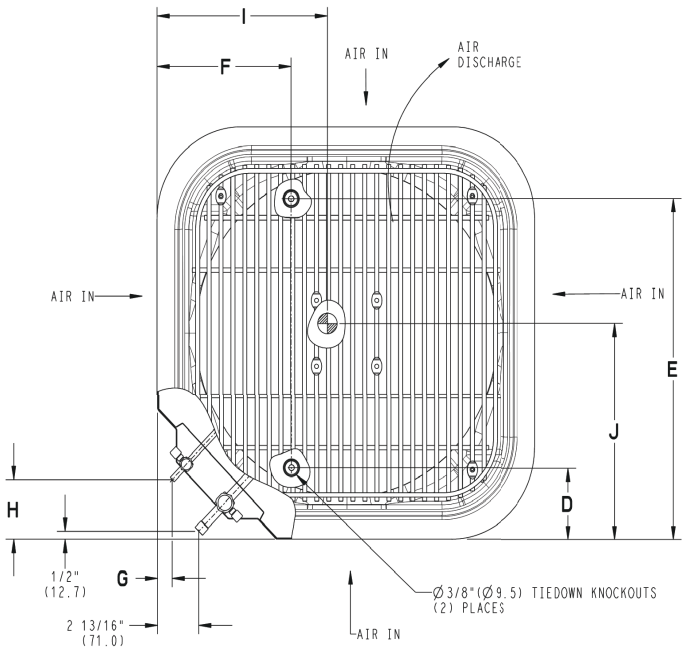

UNIT SIZE	"X" MINIMUM GROUND MOUNTING PAD APPLICATION DIMENSIONS		"Y" MINIMUM ROOF-TOP MOUNTING PAD APPLICATION DIMENSIONS	
24	23 1/8	587.3	17 7/8	454.6
-	25 3/4	654.0	20 7/16	518.5
36	31 3/16	792.5	22 15/16	583.2
48,60	35	889.0	26 3/4	679.7

NOTE: ALL DIMENSIONS IN INCH (MM)

U.S. ECCN: Not Subject to Regulation (N.S.R.)

SD5960-4 REV. A

Manufacturer reserves the right to change, at any time, specifications and designs without notice and without obligations.

CLEARANCES

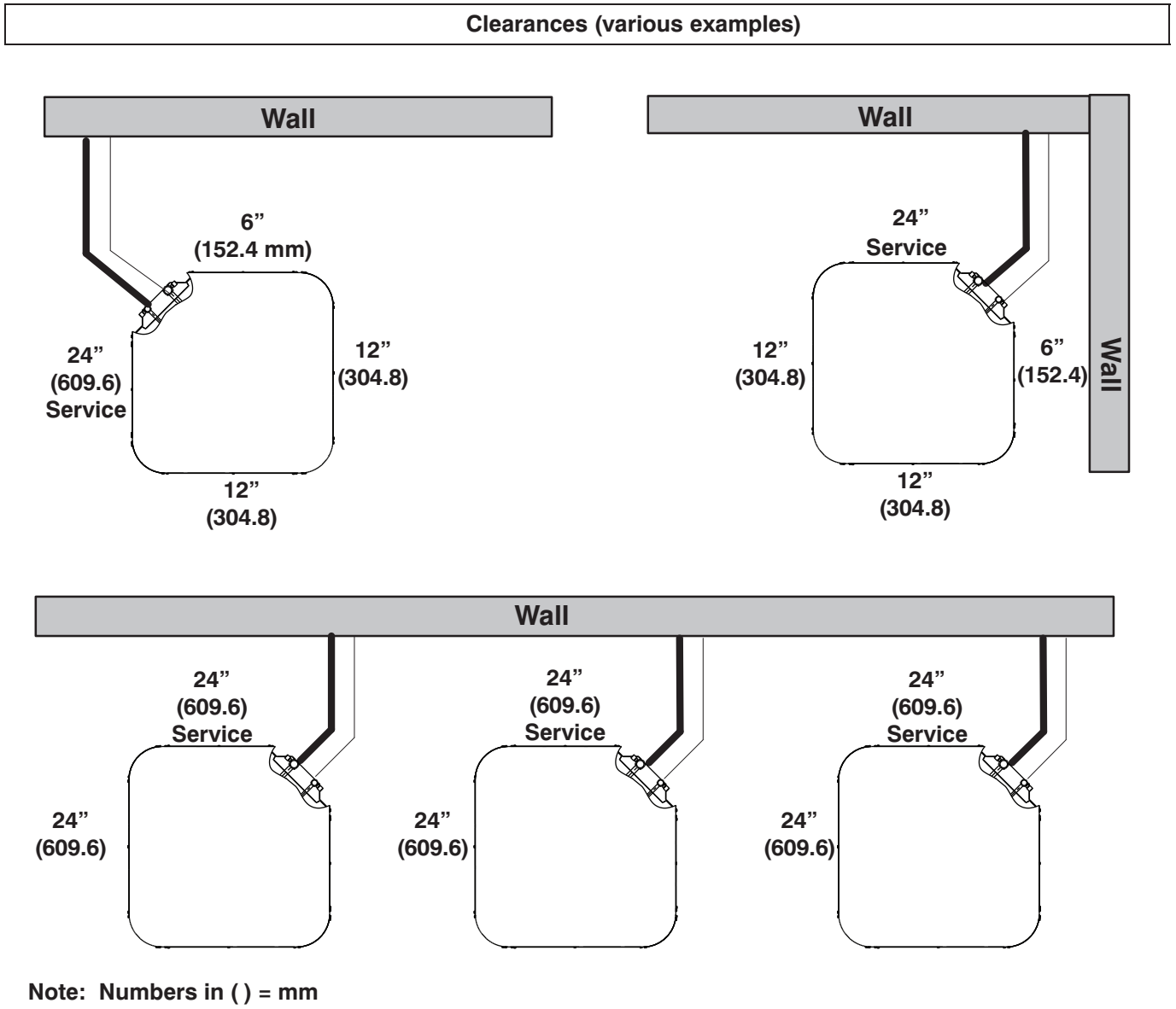

Note: Numbers in ( ) = mm

IMPORTANT: When installing multiple units in an alcove, roof well, or partially enclosed area, ensure there is adequate ventilation to prevent re-circulation of discharge air.

A07833

Manufacturer reserves the right to change, at any time, specifications and designs without notice and without obligations.

BALANCE POINT WORKSHEET

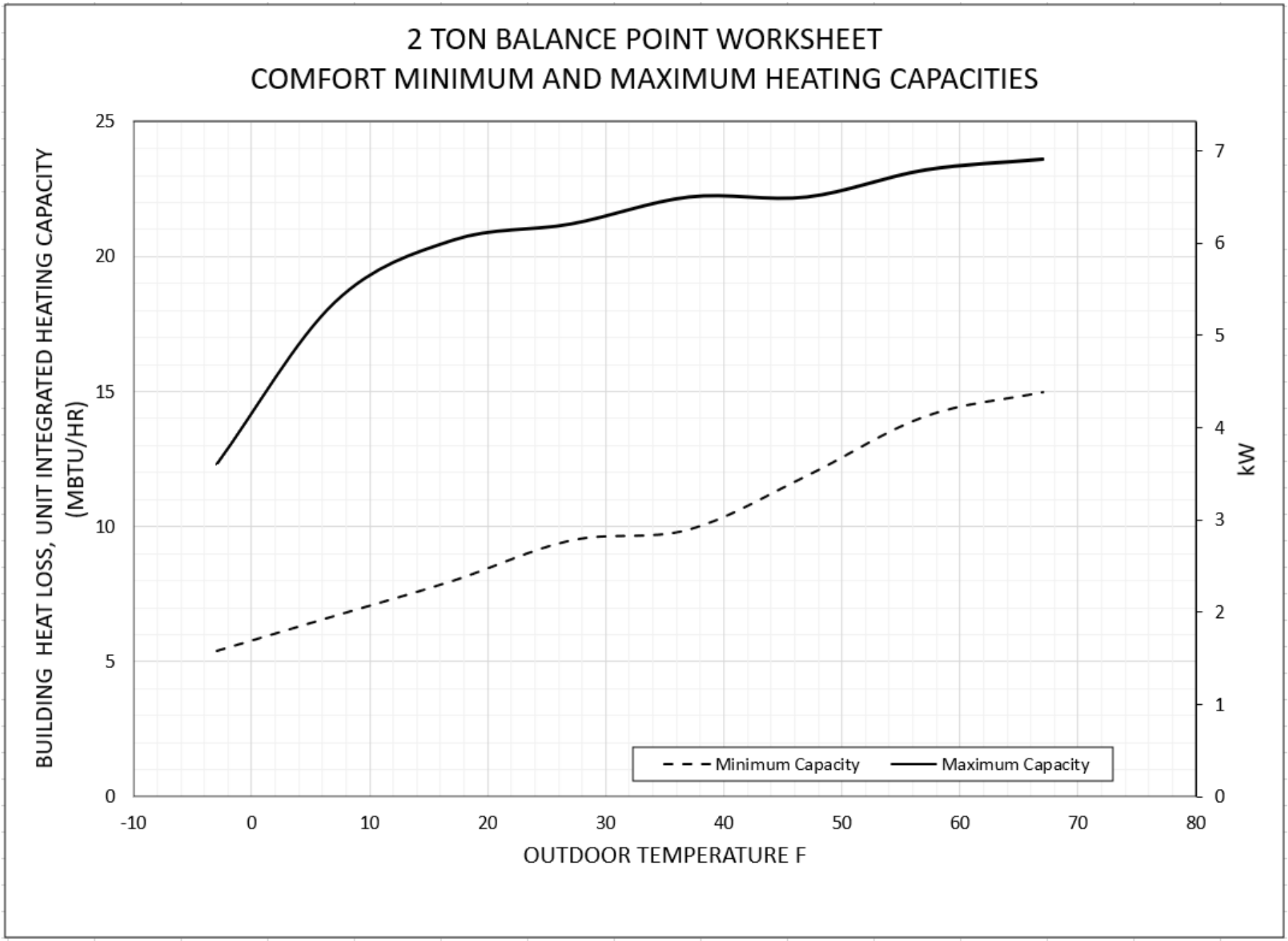

Manufacturer reserves the right to change, at any time, specifications and designs without notice and without obligations.

BALANCE POINT WORKSHEET - Continued

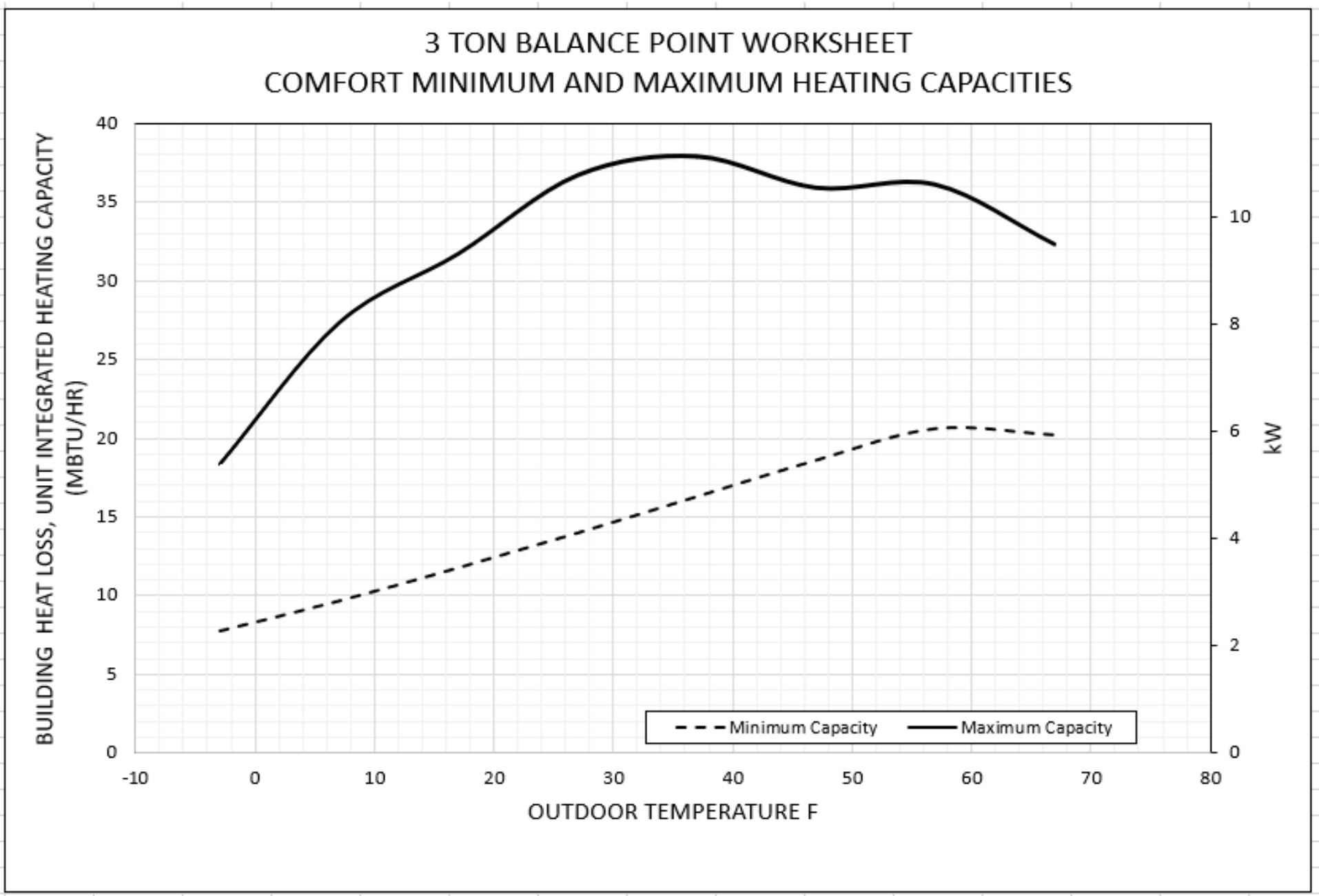

Manufacturer reserves the right to change, at any time, specifications and designs without notice and without obligations.

BALANCE POINT WORKSHEET - Continued

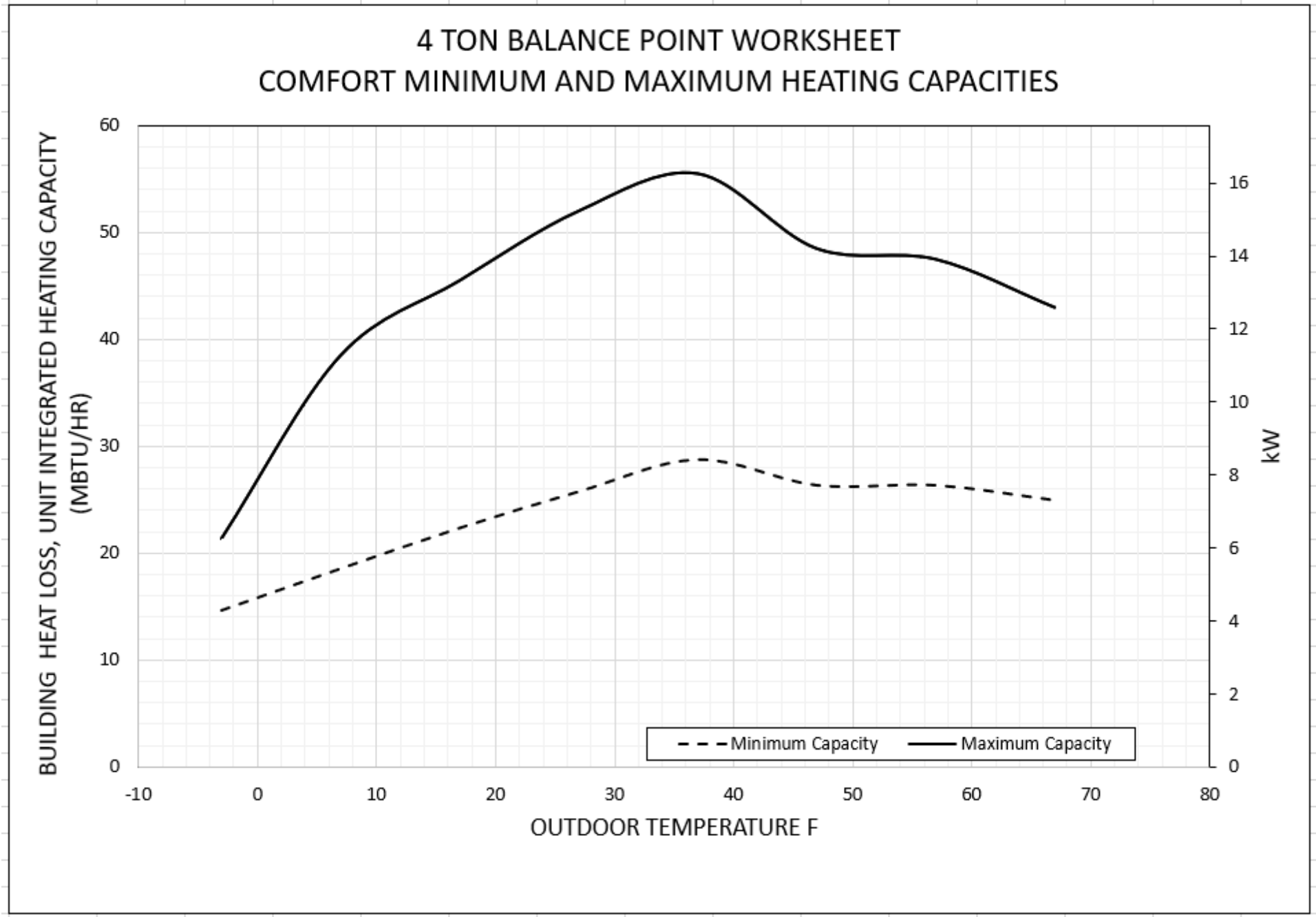

Manufacturer reserves the right to change, at any time, specifications and designs without notice and without obligations.

BALANCE POINT WORKSHEET - Continued

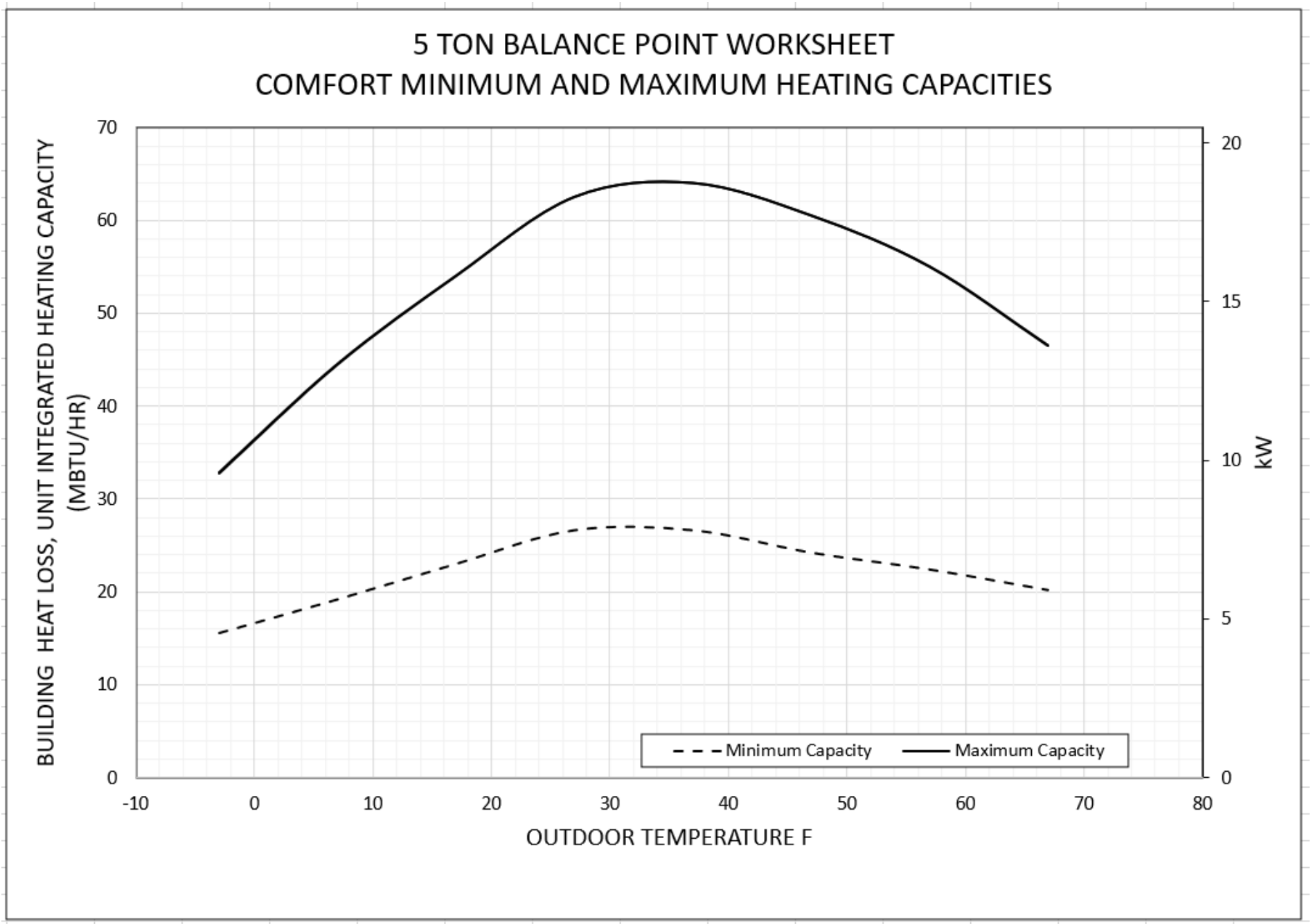

Manufacturer reserves the right to change, at any time, specifications and designs without notice and without obligations.

Detailed Cooling Capacities# - Cooling Efficiency Mode

EDB	EVAP AIR EWB	CONDENSER ENTERING AIR TEMPERATURES °F (°C)																											
		65.0 (18.3)				75.0 (23.9)				85.0 (29.4)				95.0 (35.0)				105.0 (40.6)				115.0 (46.1)				125.0 (51.7)			
		ID SCFM	Capacity MBtuh†		Total Sys. KW**	ID SCFM	Capacity MBtuh†		Total Sys. KW**	ID SCFM	Capacity MBtuh†		Total Sys. KW**	ID SCFM	Capacity MBtuh†		Total Sys. KW**	ID SCFM	Capacity MBtuh†		Total Sys. KW**	ID SCFM	Capacity MBtuh†		Total Sys. KW**	ID SCFM	Capacity MBtuh†		Total Sys. KW**
			Total	Sens‡			Total	Sens‡			Total	Sens‡			Total	Sens‡			Total	Sens‡			Total	Sens‡			Total	Sens‡	
290VAN024 Maximum Demand																													
75 (23.9)	72.0 (22.2)	900	30	12.4	1.24	900	28.6	11.5	1.52	900	27.6	11.2	1.79	900	26	11	2.09	800	24.2	10.4	2.4	900	22.8	10.1	2.76	900	13.9	6.7	2.03
	67.0 (19.4)		27.2	17.1	1.26		26	16.1	1.53		25.2	15.8	1.81		23.6	15.6	2.09		22	14.6	2.39		20.6	14.9	2.72		12.5	11.1	2.02
	63.0 (17.2)††		25.4	20.8	1.29		24.2	19.6	1.54		23.2	19.4	1.81		22	19.2	2.10		20.4	18	2.37		19.3	18.5	2.72		12.2	12.1	2.01
	57.0 (13.9)		23.8	23.8	1.29		23	22.6	1.55		22.2	22	1.81		21.2	21.2	2.10		19.5	19.5	2.37		18.9	18.9	2.71		12.2	12.1	2.02
80 (26.7)	72.0 (22.2)	900	29.8	17	1.24	900	28.4	16	1.51	900	27.4	15.8	1.78	900	26	15.6	2.10	800	24.2	14.6	2.41	900	22.6	14.8	2.75	900	13.7	11.2	2.01
	67.0 (19.4)		27.2	21.6	1.27		26	20.6	1.53		25.0	20.2	1.8		23.6	19.2	2.15		22	18.9	2.39		21.6	17.6	2.82		13.2	13	2.02
	63.0 (17.2)††		25.6	25.2	1.28		24.4	23.8	1.53		24	22.2	1.81		22.8	21.6	2.10		21.2	20.4	2.39		20.2	20.2	2.72		13.2	13.1	2.02
	57.0 (13.9)		25.4	25.4	1.29		24.4	24	1.54		23.6	23.4	1.81		22.6	22.6	2.10		20.8	20.8	2.38		20.2	20.2	2.73		13.2	13.1	2.02
290VAN024 Intermediate Demand																													
75 (23.9)	72.0 (22.2)	635	15.1	6.4	0.5	635	14.6	6	0.57	550	13.8	5.6	0.69	620	16.3	6.9	1.16	620	18.2	7.9	1.76	620	16.9	7.4	1.99	620	13.2	5.8	1.86
	67.0 (19.4)		13.6	9.6	0.52		13.1	9.1	0.59		12.3	8.3	0.71		14.6	10.1	1.16		16.3	11.2	1.76		15.2	10.9	1.97		11.8	9	1.84
	63.0 (17.2)††		12.7	12	0.53		12.2	11.3	0.6		11.4	10.3	0.72		13.5	12.5	1.17		15.2	13.9	1.76		14.1	13.5	1.96		11.1	10.6	1.83
	57.0 (13.9)		12.6	12.2	0.53		12.2	11.4	0.61		11.2	10.6	0.72		13.3	13.1	1.17		14.7	14.7	1.76		13.7	13.7	1.95		11	10.9	1.83
80 (26.7)	72.0 (22.2)	635	15	9.6	0.5	635	14.5	9.2	0.57	550	13.7	8.4	0.69	620	16.2	10.1	1.16	620	18.1	11.3	1.76	620	16.7	10.9	1.98	620	13	9.1	1.85
	67.0 (19.4)		13.7	12.7	0.52		13.2	12.1	0.59		12.4	11	0.71		14.6	13.2	1.16		16.5	14.6	1.77		15.2	14.2	1.97		12	11.4	1.84
	63.0 (17.2)††		13.5	13.1	0.52		13.1	12.3	0.59		12.1	11.4	0.71		14.2	14.1	1.16		15.7	15.7	1.76		14.7	14.7	1.97		11.9	11.8	1.84
	57.0 (13.9)		13.5	13.1	0.52		13.1	12.3	0.59		12.1	11.4	0.71		14.2	14.1	1.16		15.7	15.7	1.76		14.7	14.7	1.97		11.9	11.8	1.84
290VAN024 Minimum Demand																													
75 (23.9)	72.0 (22.2)	500	7.1	3.6	0.21	500	6.5	3.3	0.27	500	5.9	3.1	0.35	485	11	4.7	0.72	485	14.9	6.3	1.37	485	13.7	5.9	1.57	485	12.5	5.3	1.79
	67.0 (19.4)		6.4	6.1	0.22		5.9	5	0.28		5.3	5.2	0.36		9.8	7.1	0.73		13.4	8.9	1.37		12.3	8.5	1.56		11.1	7.8	1.76
	63.0 (17.2)††		6.3	6.3	0.23		5.8	5.7	0.28		5.3	5.2	0.36		9.1	8.5	0.73		12.3	10.9	1.37		11.3	10.5	1.56		10.2	9.7	1.74
	57.0 (13.9)		6.3	6.3	0.23		5.8	5.7	0.28		5.3	5.2	0.36		9.1	8.7	0.73		11.8	11.8	1.37		11	11	1.56		10.1	9.9	1.75
80 (26.7)	72.0 (22.2)	500	7.1	6.2	0.21	500	6.5	5.8	0.26	500	5.9	4.9	0.34	485	10.9	7.2	0.71	485	14.8	8.9	1.37	485	13.7	8.6	1.58	485	12.4	7.9	1.78
	67.0 (19.4)		6.9	6.9	0.21		6.4	6.2	0.27		5.8	5.7	0.34		10	9	0.73		13.4	11.5	1.38		12.2	11.1	1.56		11.1	10.3	1.76
	63.0 (17.2)††		6.9	6.9	0.21		6.4	6.2	0.27		5.8	5.7	0.34		9.8	9.5	0.72		12.7	12.7	1.37		11.8	11.8	1.56		10.9	10.8	1.76
	57.0 (13.9)		6.9	6.9	0.21		6.4	6.2	0.27		5.8	5.7	0.34		9.8	9.4	0.72		12.6	12.6	1.37		11.8	11.8	1.56		10.9	10.7	1.76

Detailed Cooling Capacities# - Cooling Efficiency Mode

EDB	EVAP AIR EWB	CONDENSER ENTERING AIR TEMPERATURES °F (°C)																									
		65.0 (18.3)				75.0 (23.9)				85.0 (29.4)				95.0 (35.0)				105.0 (40.6)				115.0 (46.1)				125.0 (51.7)			
		ID SCFM	Capacity MBtuh†		Total Sys. KW**	ID SCFM	Capacity MBtuh†		Total Sys. KW**	ID SCFM	Capacity MBtuh†		Total Sys. KW**	ID SCFM	Capacity MBtuh†		Total Sys. KW**	ID SCFM	Capacity MBtuh†		Total Sys. KW**	ID SCFM	Capacity MBtuh†		Total Sys. KW**	ID SCFM	Capacity MBtuh†		Total Sys. KW**
			Total	Sens‡			Total	Sens‡			Total	Sens‡			Total	Sens‡			Total	Sens‡			Total	Sens‡			Total	Sens‡	
290VAN036 Maximum Demand																													
75 (23.9)	72.0 (22.2)	1200	41	15.7	1.8	1200	42.5	16.7	2.47	1200	40.5	16.1	2.76	1200	38	15.4	3.08	1200	35.8	14.6	3.46	1200	34.2	13.9	3.89	1200	31.2	12.4	3.78
	67.0 (19.4)		37.4	21.8	1.86		38.5	22.8	2.48		36.8	22.2	2.77		34.6	21.4	3.09		32.6	20.6	3.44		31.2	20	3.86		28.2	18.8	3.74
	63.0 (17.2)††		34.8	26.6	1.9		35.8	27.6	2.5		34.2	27	2.78		32	26.2	3.08		30.2	25.2	3.42		28.8	24.6	3.82		26.2	23.6	3.7
	57.0 (13.9)		32.6	31	1.92		33.2	32.6	2.52		31.8	31.6	2.77		30	30	3.06		28.6	28.6	3.4		27.6	27.4	3.8		26	24.2	3.71
80 (26.7)	72.0 (22.2)	1200	41	21.8	1.8	1200	42	22.6	2.45	1200	40.5	22.2	2.77	1200	37.8	21.4	3.08	1200	35.6	20.6	3.45	1200	34.2	19.9	3.9	1200	30.8	18.8	3.76
	67.0 (19.4)		37.2	27.8	1.85		38.5	28.6	2.48		36.8	28.2	2.77		35	27.6	3.11		32.4	26.4	3.42		31.2	26	3.82		28.2	24.8	3.72
	63.0 (17.2)††		35	32.2	1.88		36	33.2	2.5		34.4	32.6	2.77		32.4	31.6	3.09		31	29	3.43		30	27.8	3.85		27.8	26	3.73
	57.0 (13.9)		34.6	32.8	1.89		35.2	34.6	2.5		33.8	33.6	2.77		32	32	3.07		30.4	30.4	3.41		29.6	29.2	3.84		27.8	26	3.74
290VAN036 Intermediate Demand																													
75 (23.9)	72.0 (22.2)	750	20.6	8.5	0.58	750	21.6	8.9	0.8	670	20.2	8.3	0.94	830	23.4	9.6	1.43	985	21.8	9.4	1.71	985	20.8	9	1.97	985	17.8	8	2.03
	67.0 (19.4)		18.5	12.1	0.62		19.6	12.7	0.85		18.3	11.8	0.98		21	13.9	1.44		19.7	14.3	1.72		18.6	13.9	1.96		16	13	2.04
	63.0 (17.2)††		17.1	15	0.65		18.1	15.6	0.87		16.8	14.4	1		19.5	17.1	1.46		18.4	17.5	1.72		17.6	16.5	1.96		15.4	14.6	2.03
	57.0 (13.9)		16.6	16.1	0.67		17.5	16.9	0.88		16.1	15.7	1.01		18.9	18.4	1.47		18.3	17.9	1.73		17.5	16.9	1.96		15.4	14.6	2.03
80 (26.7)	72.0 (22.2)	750	20.4	12.2	0.57	750	21.6	12.7	0.81	670	20.2	11.8	0.95	830	23.2	13.9	1.43	985	21.6	14.4	1.7	985	20.4	14	1.95	985	17.6	13	2.04
	67.0 (19.4)		18.5	15.7	0.62		19.4	16.3	0.84		18.2	15.1	0.98		21	18	1.44		19.8	18.8	1.72		19	17.7	1.96		16.7	15.8	2.04
	63.0 (17.2)††		17.8	17.2	0.64		18.7	18.1	0.86		17.5	16.3	0.99		20.2	19.7	1.45		19.7	19.2	1.72		18.8	18.2	1.95		16.7	15.8	2.04
	57.0 (13.9)		17.8	17.2	0.64		18.7	18.1	0.86		17.3	16.9	0.99		20.2	19.7	1.45		19.7	19.2	1.73		18.8	18.2	1.96		16.7	15.8	2.04
290VAN036 Minimum Demand																													
75 (23.9)	72.0 (22.2)	525	10.3	4.7	0.22	525	9.7	4.5	0.31	525	8.8	4.3	0.4	705	13.7	6.2	0.82	880	12.6	6.2	1.03	880	11.5	5.9	1.17	880	11	5.7	1.37
	67.0 (19.4)		9.2	7.2	0.25		8.6	7.1	0.34		7.8	6.8	0.42		12.2	9.7	0.84		11.3	10.3	1.05		10.4	8.4	1.17		9.8	9.4	1.36
	63.0 (17.2)††		8.8	8.5	0.27		8.3	8.1	0.35		7.6	7.5	0.42		11.6	11.4	0.85		11.1	10.9	1.05		10.2	10.1	1.18		9.8	9.4	1.36
	57.0 (13.9)		8.7	8.5	0.27		8.3	8.1	0.35		7.6	7.5	0.43		11.6	11.4	0.85		11.1	10.9	1.05		10.2	10.1	1.18		9.8	9.4	1.36
80 (26.7)	72.0 (22.2)	525	10.2	7.3	0.22	525	9.6	7.2	0.31	525	8.7	6.9	0.39	705	13.6	9.7	0.82	880	12.5	10.4	1.03	880	11.4	10.1	1.17	880	10.9	9.9	1.37
	67.0 (19.4)		9.5	9.2	0.24		9	8.8	0.32		8.3	8.1	0.41		12.8	11.4	0.83		12.1	11.8	1.04		11.1	11	1.17		10.7	10.3	1.36
	63.0 (17.2)††		9.5	9.2	0.24		9	8.8	0.32		8.3	8.1	0.41		12.5	12.3	0.83		12.1	11.8	1.04		11.1	11	1.17		10.8	10.3	1.37
	57.0 (13.9)		9.4	9.2	0.24		9	8.7	0.32		8.3	8.1	0.41		12.5	12.3	0.83		12	11.8	1.03		11.1	11	1.17		10.7	10.3	1.36

Manufacturer reserves the right to change, at any time, specifications and designs without notice and without obligations.

Detailed Cooling Capacities# - Cooling Efficiency Mode

EDB	EVAP AIR EWB	CONDENSER ENTERING AIR TEMPERATURES °F (°C)																									
		65.0 (18.3)				75.0 (23.9)				85.0 (29.4)				95.0 (35.0)				105.0 (40.6)				115.0 (46.1)				125.0 (51.7)			
		ID SCFM	Capacity MBtuh†		Total Sys. KW**	ID SCFM	Capacity MBtuh†		Total Sys. KW**	ID SCFM	Capacity MBtuh†		Total Sys. KW**	ID SCFM	Capacity MBtuh†		Total Sys. KW**	ID SCFM	Capacity MBtuh†		Total Sys. KW**	ID SCFM	Capacity MBtuh†		Total Sys. KW**	ID SCFM	Capacity MBtuh†		Total Sys. KW**
			Total	Sens‡			Total	Sens‡			Total	Sens‡			Total	Sens‡			Total	Sens‡			Total	Sens‡			Total	Sens‡	
290VAN048 Maximum Demand																													
75 (23.9)	72.0 (22.2)	1350	50	20.8	2.01	1350	52	22.2	2.78	1350	55	22	3.77	1350	52.5	20.8	4.18	1350	50	19.4	4.63	1350	46.5	18.6	5.1	1350	34.4	16.3	4.25
	67.0 (19.4)		45.5	27.8	2.07		47	29.4	2.8		50	29	3.77		48	27.6	4.18		45.5	26.2	4.58		42.5	25.4	5.04		31.2	24	4.19
	63.0 (17.2)††		42.5	33.4	2.13		44	35.2	2.85		46.5	34.4	3.77		44.5	32.8	4.16		42.5	31.6	4.57		39.5	30.8	4.97		29.2	29.2	4.17
	57.0 (13.9)		39	39	2.16		40	40	2.84		42	42	3.75		40.5	40	4.12		39	38	4.51		36.8	36.6	4.92		28.4	28.4	4.16
80 (26.7)	72.0 (22.2)	1350	50	27.8	2.01	1350	51.5	29.4	2.76	1350	54.5	28.8	3.74	1350	52.5	27.4	4.19	1350	49.5	26	4.6	1350	46.5	25.4	5.12	1350	34	23.8	4.23
	67.0 (19.4)		45.5	34.8	2.07		47	36.4	2.81		50	35.6	3.77		46	33.6	4.24		45	32.6	4.57		44	32.8	5.06		31	31	4.18
	63.0 (17.2)††		42.5	40	2.11		44	42	2.84		46.5	41	3.77		44.5	39.5	4.15		42.5	38	4.55		39.5	37.4	4.95		30.2	30.2	4.18
	57.0 (13.9)		41	41	2.12		42	42	2.83		44.5	44.5	3.78		43	42.5	4.16		41	40.5	4.51		39	39	4.96		30.2	30.2	4.19
290VAN048 Intermediate Demand																													
75 (23.9)	72.0 (22.2)	950	29.6	11.5	0.81	950	29.4	12	1.13	850	29.2	11.9	1.42	1045	33.4	13.9	2.14	1145	31.8	13.2	2.47	1145	29.4	12.6	2.75	1145	23	10.9	2.67
	67.0 (19.4)		26.8	16.2	0.87		26.6	16.9	1.17		26.4	16.3	1.46		30	19.3	2.15		28.8	19.1	2.47		26.4	18.6	2.73		20.8	17.1	2.67
	63.0 (17.2)††		24.8	19.9	0.91		24.6	20.6	1.2		24.4	19.7	1.48		28	23.6	2.16		26.6	23.6	2.46		24.8	23.2	2.74		19.7	19.7	2.66
	57.0 (13.9)		23.6	22.2	0.93		23.4	23	1.22		22.8	22.6	1.49		26.4	26.4	2.15		25.8	25.8	2.47		24.2	24.2	2.73		19.6	19.6	2.66
80 (26.7)	72.0 (22.2)	950	29.4	16.2	0.81	950	29.2	16.9	1.12	850	29	16.3	1.42	1045	33.2	19.4	2.13	1145	31.6	19.1	2.47	1145	29	18.6	2.74	1145	22.8	17.1	2.68
	67.0 (19.4)		26.6	20.8	0.86		26.4	21.6	1.17		26.2	20.6	1.45		30.2	24.8	2.15		28.6	24.8	2.46		26.6	24.4	2.74		21	21	2.66
	63.0 (17.2)††		25.6	22.4	0.89		25.4	23.4	1.19		24.4	23.8	1.46		28.4	28.4	2.16		27.6	27.6	2.47		25.8	25.8	2.73		21	21	2.67
	57.0 (13.9)		25.2	23.6	0.9		25	24.6	1.2		24.2	24.2	1.47		28.2	28.2	2.16		27.6	27.4	2.47		25.8	25.8	2.73		21	21	2.67
290VAN048 Minimum Demand																													
75 (23.9)	72.0 (22.2)	750	17.5	7.6	0.38	750	16.2	7.5	0.53	750	15	7.1	0.67	895	22.6	9.4	1.32	1040	21.4	9.1	1.6	1040	19.5	8.6	1.79	1040	17.3	8.5	2.01
	67.0 (19.4)		15.8	11.4	0.43		14.6	11.4	0.57		13.5	11	0.7		20.4	13.9	1.35		19.2	14.1	1.61		17.5	13.8	1.8		15.5	13.9	2.01
	63.0 (17.2)††		14.7	14.1	0.45		13.7	13.6	0.59		12.9	12.3	0.71		18.9	17.2	1.36		18.2	16.6	1.61		16.7	16.1	1.8		15	15	2.01
	57.0 (13.9)		14.6	14.3	0.46		13.6	13.6	0.59		12.7	12.7	0.71		18.6	17.9	1.36		18.1	17.1	1.62		16.7	16.1	1.8		15	15	2.01
80 (26.7)	72.0 (22.2)	750	17.4	11.4	0.38	750	16	11.4	0.52	750	14.9	11	0.67	895	22.4	13.9	1.32	1040	21	14.2	1.58	1040	19.2	13.8	1.78	1040	17.1	14	2.02
	67.0 (19.4)		15.9	14.9	0.42		14.7	14.7	0.56		13.8	13.6	0.69		20.4	18.1	1.35		19.7	17.4	1.6		18.1	17	1.79		16.2	16.2	2.01
	63.0 (17.2)††		15.7	15.4	0.43		14.6	14.6	0.56		13.7	13.7	0.69		20	19.2	1.35		19.4	18.4	1.6		18	17.3	1.79		16.2	16.2	2.01
	57.0 (13.9)		15.7	15.3	0.43		14.6	14.6	0.56		13.7	13.7	0.69		20	19.1	1.36		19.4	18.4	1.6		18	17.3	1.8		16.2	16.2	2.01

Manufacturer reserves the right to change, at any time, specifications and designs without notice and without obligations.

Detailed Cooling Capacities# - Cooling Efficiency Mode

EDB	EVAP AIR EWB	CONDENSER ENTERING AIR TEMPERATURES °F (°C)																									
		65.0 (18.3)				75.0 (23.9)				85.0 (29.4)				95.0 (35.0)				105.0 (40.6)				115.0 (46.1)				125.0 (51.7)			
		ID SCFM	Capacity MBtuh†		Total Sys. KW**	ID SCFM	Capacity MBtuh†		Total Sys. KW**	ID SCFM	Capacity MBtuh†		Total Sys. KW**	ID SCFM	Capacity MBtuh†		Total Sys. KW**	ID SCFM	Capacity MBtuh†		Total Sys. KW**	ID SCFM	Capacity MBtuh†		Total Sys. KW**	ID SCFM	Capacity MBtuh†		Total Sys. KW**
			Total	Sens‡			Total	Sens‡			Total	Sens‡			Total	Sens‡			Total	Sens‡			Total	Sens‡			Total	Sens‡	
290VAN060 Maximum Demand																													
75 (23.9)	72.0 (22.2)	1950	67	27.6	3.34	1950	65	27.8	3.94	1950	68	27.4	5.04	1950	64.5	26	5.6	1850	61	24.6	6.16	1700	57	23.6	6.83	1300	42.5	19.5	5.52
	67.0 (19.4)		60.5	37.6	3.35		59.5	38	3.98		61.5	37.2	4.98		58.5	35.6	5.52		55.5	33.8	6.07		52	32.2	6.68		38.5	27.2	5.44
	63.0 (17.2)††		56.5	45.5	3.39		55	46	3.99		57	45	4.95		54.5	43	5.51		51.5	41	6		48	39	6.54		35.6	33	5.38
	57.0 (13.9)		52	52	3.38		51	51	3.97		52.5	52.5	4.9		50.5	50.5	5.43		48	48	5.93		45	45	6.48		33.8	33.8	5.35
80 (26.7)	72.0 (22.2)	1950	67	37.4	3.35	1950	65	37.8	3.94	1950	68	37	5.05	1950	64.5	35.4	5.62	1850	60.5	33.6	6.14	1700	57	32	6.85	1300	42.5	27.2	5.53
	67.0 (19.4)		60.5	47	3.35		59	48	3.95		61.5	47	4.98		58	44.5	5.45		55	42.5	6.03		51.5	41.5	6.62		38.5	34.6	5.45
	63.0 (17.2)††		56.5	55	3.37		55.5	55.5	3.99		57.5	54	4.97		55	52.5	5.51		51.5	49.5	5.96		48.5	47	6.59		36.2	36.2	5.4
	57.0 (13.9)		55.5	55.5	3.39		54.5	54.5	3.99		56	56	4.94		54	54	5.5		51	51	5.99		48	48	6.59		36	36	5.39
290VAN060 Intermediate Demand																													
75 (23.9)	72.0 (22.2)	1170	36.6	14.5	0.96	1170	35	14.4	1.24	1080	35.2	14.4	1.63	1220	39.5	16.4	2.49	1380	37.4	15.9	2.89	1300	35	15.1	3.26	1130	28.2	12.7	3.08
	67.0 (19.4)		33	20.2	1.01		31.8	20.4	1.29		31.8	20	1.67		35.8	22.8	2.5		33.8	23	2.89		31.6	22	3.24		25.4	19	3.07
	63.0 (17.2)††		30.6	24.8	1.05		29.4	25	1.31		29.2	24.4	1.68		33	27.8	2.5		31.4	28.4	2.89		29.4	27.2	3.23		23.4	23.4	3.02
	57.0 (13.9)		29.2	27.6	1.07		28.2	27.6	1.32		27.8	27.4	1.7		31.2	31.2	2.49		30.6	30.4	2.89		28.6	28.6	3.22		23.2	23.2	3.03
80 (26.7)	72.0 (22.2)	1170	36.4	20.2	0.96	1170	35	20.4	1.24	1080	35	20	1.62	1220	39.5	22.8	2.49	1380	37.2	23	2.88	1300	34.8	22	3.25	1130	28	19	3.08
	67.0 (19.4)		33	26	1.01		31.8	26.2	1.28		31.8	25.6	1.67		35.6	29.2	2.49		34.6	24.6	2.86		32.4	23.8	3.21		25.4	24.8	3.05
	63.0 (17.2)††		31.6	28	1.03		30.6	27.8	1.29		30.2	27.8	1.68		34	31.8	2.5		32.8	32.6	2.89		30.8	30.8	3.25		25	25	3.05
	57.0 (13.9)		31.2	29.6	1.04		30.2	29.4	1.3		29.8	29.2	1.69		33.4	33.4	2.5		32.8	32.6	2.9		30.6	30.6	3.23		25	25	3.05
290VAN060 Minimum Demand																													
75 (23.9)	72.0 (22.2)	780	18.4	8.2	0.34	780	17.4	8.1	0.49	780	16.3	7.7	0.64	850	24.2	10.1	1.26	1150	23	10.2	1.55	1100	21.4	9.7	1.78	1050	19.9	9.6	2.09
	67.0 (19.4)		16.5	12.2	0.38		15.6	12.2	0.53		14.6	11.8	0.67		21.8	14.4	1.29		20.6	15.8	1.56		19.1	15.2	1.78		17.8	15.1	2.08
	63.0 (17.2)††		15.4	15	0.41		14.7	14.6	0.55		14	12.8	0.68		20	17.7	1.29		19.7	18.3	1.57		18.4	17.1	1.78		17	17	2.07
	57.0 (13.9)		15.2	15.2	0.41		14.6	14.6	0.55		13.7	13.7	0.68		19.5	18.8	1.3		19.6	18.8	1.58		18.2	17.8	1.78		17	17	2.07
80 (26.7)	72.0 (22.2)	780	18.2	12.2	0.34	780	17.3	12.3	0.49	780	16.2	11.9	0.64	850	24.2	14.4	1.26	1150	22.8	15.9	1.54	1100	21.2	15.3	1.77	1050	19.7	15.3	2.08
	67.0 (19.4)		16.6	15.9	0.38		16	15	0.52		15.1	13.8	0.65		21.8	18.6	1.28		21.4	19.8	1.57		19.9	18.6	1.78		18.4	18.4	2.07
	63.0 (17.2)††		16.4	16.4	0.38		15.7	15.7	0.53		14.8	14.8	0.66		21	20.2	1.29		21.2	20.4	1.57		19.7	19.2	1.78		18.4	18.4	2.07
	57.0 (13.9)		16.4	16.4	0.38		15.7	15.7	0.53		14.8	14.8	0.66		21	20.2	1.29		21.2	20.4	1.57		19.7	19.2	1.78		18.4	18.4	2.08

† Total and sensible capacities are net capacities. Blower motor heat has been subtracted.

‡ Sensible capacities shown are based on 80°F (27°C) entering air at the indoor coil. For sensible capacities at other than 80°F (27°C), deduct 835 Btuh (245 kW) per 1000 CFM (480 L/S) of indoor coil air for each degree below 80°F (27°C), or add 835 Btuh (245 kW) per 1000 CFM (480 L/S) of indoor coil air per degree above 80°F (27°C).

** System kw is total of indoor and outdoor unit kilowatts.

Detailed cooling capacities are based on indoor and outdoor unit at the same elevation per AHRI standard 210/240-08. If additional tubing length and/or indoor unit is located above outdoor unit, a slight variation in capacity may occur.

NOTE: When the required data falls between the published data, interpolation may be performed. Extrapolation is not an acceptable practice.

EDB— Entering Dry Bulb **EWB** — Entering Wet Bulb

Manufacturer reserves the right to change, at any time, specifications and designs without notice and without obligations.

Detailed Cooling Capacities# - Comfort + Dehumidify Mode

EVAPORATOR AIR °F (°C)		CONDENSER ENTERING AIR TEMPERATURES °F (°C)																											
		65.0 (18.3)				75.0 (23.9)				85.0 (29.4)				95.0 (35.0)				105.0 (40.6)				115.0 (46.1)				125.0 (51.7)			
EDB	EWB	ID SCFM	Capacity		Total Sys. KW**	ID SCFM	Capacity		Total Sys. KW**	ID SCFM	Capacity		Total Sys. KW**	ID SCFM	Capacity		Total Sys. KW**	ID SCFM	Capacity		Total Sys. KW**	ID SCFM	Capacity		Total Sys. KW**	ID SCFM	Capacity		Total Sys. KW**
			Total	Sens‡			Total	Sens‡			Total	Sens‡			Total	Sens‡			Total	Sens‡			Total	Sens‡			Total	Sens‡	
290VAN024 Maximum Demand																													
75 (23.9)	72.0 (22.2)	650	27.6	10.7	1.13	600	27.2	10.6	1.47	580	26	10.1	1.73	550	24.6	9.3	2.03	550	23.2	8.7	2.33	550	21.8	8.2	2.66	600	13.5	5.9	1.93
	67.0 (19.4)		25.2	14	1.16		24.6	13.8	1.47		23.6	13.1	1.74		22.2	12.2	2.01		21	11.5	2.31		19.7	11	2.61		12.1	9	1.93
	63.0 (17.2)††		23.2	16.6	1.17		22.8	16.2	1.48		21.8	15.5	1.73		20.6	14.4	2.01		19.4	13.7	2.29		18.2	13.2	2.59		11.3	10.9	1.92
	57.0 (13.9)		21.2	19.7	1.19		20.6	19.7	1.49		19.6	18.7	1.73		18.4	17.4	1.99		17.5	16.4	2.26		16.6	15.5	2.55		11.2	11.1	1.92
80 (26.7)	72.0 (22.2)	650	27.4	14	1.13	600	27	13.7	1.47	580	26	13.1	1.74	550	24.4	12.2	2.02	550	23.2	11.5	2.34	550	21.6	11	2.65	600	13.4	9.1	1.93
	67.0 (19.4)		25	17.3	1.15		24.6	16.8	1.48		23.6	16.1	1.74		22.2	14.9	2.02		21	14.2	2.32		19.7	13.7	2.62		12.2	11.9	1.92
	63.0 (17.2)††		23.2	19.9	1.17		22.8	19.3	1.48		21.8	18.4	1.73		20.6	17.1	2.01		19.4	16.3	2.29		18.2	15.8	2.59		12.1	12	1.92
	57.0 (13.9)		22.2	21.4	1.18		21.6	21.2	1.49		20.6	20	1.73		19.5	18.5	2.00		18.6	17.4	2.28		17.7	16.6	2.58		12.1	12	1.93
290VAN024 Intermediate Demand																													
75 (23.9)	72.0 (22.2)	400	15.1	6	0.53	400	14.8	6	0.62	400	14.1	5.7	0.75	400	14.2	5.6	1	400	13.3	5.2	1.17	400	12.1	4.9	1.34	400	8.4	3.7	1.17
	67.0 (19.4)		13.6	8.1	0.54		13.3	8.2	0.64		12.7	7.8	0.77		12.7	7.7	1		11.8	7.3	1.17		10.8	6.9	1.34		7.3	5.8	1.17
	63.0 (17.2)††		12.6	9.8	0.55		12.3	9.8	0.65		11.6	9.5	0.78		11.6	9.3	1.01		10.8	8.8	1.17		9.9	8.4	1.34		6.8	6.8	1.16
	57.0 (13.9)		11.6	11.4	0.56		11.3	11.3	0.66		10.8	10.8	0.78		10.8	10.6	1.01		10.2	9.8	1.17		9.5	9.1	1.34		6.8	6.8	1.17
80 (26.7)	72.0 (22.2)	400	15	8.1	0.53	400	14.8	8.2	0.62	400	14.1	7.9	0.75	400	14.1	7.8	0.99	400	13.2	7.3	1.17	400	12.1	6.9	1.34	400	8.3	5.9	1.17
	67.0 (19.4)		13.5	10.2	0.54		13.3	10.3	0.64		12.6	9.9	0.76		12.6	9.8	1		11.8	9.3	1.17		10.8	8.9	1.34		7.5	7.5	1.17
	63.0 (17.2)††		12.6	11.8	0.55		12.3	11.9	0.65		11.7	11.5	0.77		11.7	11.3	1.01		11	10.6	1.18		10.2	9.8	1.34		7.5	7.4	1.17
	57.0 (13.9)		12.3	12.1	0.55		12.1	12.1	0.65		11.6	11.5	0.78		11.6	11.3	1.01		11	10.5	1.18		10.2	9.8	1.34		7.5	7.4	1.18
290VAN024 Minimum Demand																													
75 (23.9)	72.0 (22.2)	300	8.7	3.6	0.28	300	8.4	3.5	0.32	300	7.7	3.2	0.4	300	8.8	3.5	0.59	300	8	3.2	0.7	300	7	2.9	0.8	300	5.8	2.6	0.9
	67.0 (19.4)		7.8	5.1	0.3		7.4	5.1	0.33		6.8	4.8	0.41		7.7	5.1	0.6		7	4.7	0.71		6	4.4	0.8		4.9	4.1	0.9
	63.0 (17.2)††		7.2	6.3	0.31		6.8	6.3	0.35		6.2	6	0.42		7	6.3	0.6		6.3	5.9	0.71		5.5	5.3	0.8		4.6	4.6	0.9
	57.0 (13.9)		6.9	6.8	0.31		6.6	6.6	0.35		6.1	6.1	0.42		6.8	6.6	0.61		6.2	6	0.71		5.5	5.3	0.81		4.6	4.6	0.9
80 (26.7)	72.0 (22.2)	300	8.7	5.1	0.29	300	8.3	5.1	0.31	300	7.6	4.9	0.39	300	8.7	5.1	0.59	300	7.9	4.8	0.7	300	6.9	4.5	0.8	300	5.7	4.2	0.9
	67.0 (19.4)		7.8	6.7	0.3		7.4	6.7	0.33		6.8	6.4	0.41		7.7	6.6	0.6		7	6.3	0.71		6.2	5.6	0.81		5.2	5.1	0.9
	63.0 (17.2)††		7.5	7.3	0.31		7.2	7.2	0.34		6.7	6.6	0.42		7.4	7.2	0.6		6.8	6.5	0.7		6.1	5.8	0.81		5.2	5.1	0.91
	57.0 (13.9)		7.4	7.3	0.3		7.1	7.1	0.34		6.7	6.6	0.42		7.4	7.2	0.6		6.8	6.5	0.71		6.1	5.8	0.81		5.2	5.1	0.91

Manufacturer reserves the right to change, at any time, specifications and designs without notice and without obligations.

Detailed Cooling Capacities# - Comfort + Dehumidify Mode

EVAPORATOR AIR °F (°C)		CONDENSER ENTERING AIR TEMPERATURES °F (°C)																											
		65.0 (18.3)				75.0 (23.9)				85.0 (29.4)				95.0 (35.0)				105.0 (40.6)				115.0 (46.1)				125.0 (51.7)			
EDB	EWB	ID SCFM	Capacity		Total Sys. KW**	ID SCFM	Capacity		Total Sys. KW**	ID SCFM	Capacity		Total Sys. KW**	ID SCFM	Capacity		Total Sys. KW**	ID SCFM	Capacity		Total Sys. KW**	ID SCFM	Capacity		Total Sys. KW**	ID SCFM	Capacity		Total Sys. KW**
			Total	Sens‡			Total	Sens‡			Total	Sens‡			Total	Sens‡			Total	Sens‡			Total	Sens‡			Total	Sens‡	
290VAN036 Maximum Demand																													
75 (23.9)	72.0 (22.2)	900	39	14.8	1.51	800	40	15.6	2.08	800	38.5	15.2	2.45	800	36.4	14.6	2.86	800	34.6	13.9	3.23	800	33.2	13.3	3.65	800	30.6	11.8	3.51
	67.0 (19.4)		35.4	19.5	1.56		36.6	19.8	2.12		35.2	19.4	2.48		33.2	18.8	2.86		31.4	18	3.2		30.2	17.4	3.61		27.8	16.2	3.48
	63.0 (17.2)††		32.8	23.2	1.6		33.8	23.2	2.13		32.4	22.6	2.47		30.6	22	2.84		29	21.2	3.18		27.8	20.6	3.56		25.6	19.6	3.44
	57.0 (13.9)		29.8	27.4	1.63		30.2	27.8	2.14		29	27.4	2.47		27.4	26.6	2.84		25.8	25.6	3.13		25	24.8	3.51		23.8	22.4	3.4
80 (26.7)	72.0 (22.2)	900	38.5	19.4	1.49	800	40	19.8	2.08	800	38.5	19.4	2.46	800	36.4	18.8	2.86	800	34.4	18	3.22	800	33.2	17.4	3.66	800	30.4	16.2	3.5
	67.0 (19.4)		35.2	24	1.55		36.4	24	2.11		35	23.6	2.46		33	22.8	2.84		31.2	22	3.19		30	21.6	3.6		27.6	20.6	3.47
	63.0 (17.2)††		32.8	27.6	1.59		33.8	27.2	2.13		32.4	26.8	2.47		30.6	26	2.84		29	25.2	3.18		27.8	24.6	3.56		25.8	23.6	3.45
	57.0 (13.9)		31.4	29.6	1.61		31.4	30.2	2.14		30.2	29.6	2.48		28.6	28.6	2.84		27.2	27.2	3.14		26.6	26.4	3.55		25.6	23.8	3.45
290VAN036 Intermediate Demand																													
75 (23.9)	72.0 (22.2)	625	21.4	8.5	0.6	625	22.6	9	0.84	625	22	8.8	1.04	625	22.8	9.1	1.38	650	21.4	8.7	1.59	700	20.4	8.4	1.84	775	17.8	7.6	1.94
	67.0 (19.4)		19.4	11.7	0.65		20.2	12.1	0.88		19.8	12	1.07		20.6	12.4	1.4		19.2	12	1.59		18.4	12	1.85		16	11.6	1.94
	63.0 (17.2)††		17.9	14.1	0.68		18.8	14.7	0.91		18.2	14.5	1.09		18.9	14.8	1.4		17.7	14.6	1.6		16.9	14.8	1.84		15	13.8	1.93
	57.0 (13.9)		16.7	16.1	0.71		17.5	16.9	0.93		17	16.5	1.1		17.5	17	1.41		16.7	16.3	1.6		16.3	15.8	1.83		14.9	14.1	1.93
80 (26.7)	72.0 (22.2)	625	21.4	11.6	0.6	625	22.4	12.2	0.84	625	21.8	12.1	1.04	625	22.6	12.4	1.37	650	21.2	12.1	1.58	700	20.2	12	1.83	775	17.6	11.7	1.94
	67.0 (19.4)		19.3	14.7	0.65		20.4	15.4	0.88		19.5	15.1	1.06		20.4	15.5	1.39		19.2	15.3	1.6		18.3	15.6	1.84		16.4	14.1	1.94
	63.0 (17.2)††		18	17	0.68		18.9	17.7	0.9		18.4	17.6	1.09		19	17.9	1.4		18.1	16.7	1.6		17.6	17	1.84		16.1	15.2	1.94
	57.0 (13.9)		17.8	17.2	0.68		18.7	18	0.91		18.2	17.7	1.09		18.7	18.2	1.4		17.9	17.4	1.6		17.5	16.9	1.83		16.1	15.2	1.94
290VAN036 Minimum Demand																													
75 (23.9)	72.0 (22.2)	400	13.1	5.3	0.31	400	12.3	5.1	0.41	400	11.4	4.8	0.51	400	13.1	5.4	0.78	400	12.1	5	0.92	400	11.1	4.7	1.06	400	10.7	4.5	1.25
	67.0 (19.4)		11.7	7.2	0.35		11	7.1	0.44		10.1	6.8	0.53		11.6	7.3	0.79		10.7	7	0.93		9.8	6.7	1.06		9.4	6.5	1.25
	63.0 (17.2)††		10.7	8.7	0.38		10.1	8.6	0.46		9.3	8.3	0.55		10.6	8.9	0.81		9.8	8.5	0.94		8.9	8.2	1.07		8.5	8	1.24
	57.0 (13.9)		10.1	9.8	0.39		9.6	9.4	0.47		9	8.8	0.56		10	9.8	0.81		9.3	9.2	0.94		8.7	8.6	1.07		8.4	8.1	1.24
80 (26.7)	72.0 (22.2)	400	13	7.3	0.31	400	12.2	7.1	0.41	400	11.3	6.8	0.51	400	13	7.4	0.78	400	12	7	0.92	400	11	6.7	1.06	400	10.6	6.6	1.25
	67.0 (19.4)		11.6	9.2	0.35		11	9.1	0.44		10.1	8.8	0.53		11.6	9.3	0.8		10.7	9	0.94		9.8	8.7	1.07		9.3	8.6	1.24
	63.0 (17.2)††		11	10.2	0.37		10.3	10.1	0.45		9.7	9.6	0.54		10.9	10.3	0.81		10.1	9.9	0.94		9.4	9.3	1.07		9.2	8.8	1.25
	57.0 (13.9)		10.8	10.5	0.37		10.3	10.1	0.45		9.7	9.5	0.55		10.7	10.6	0.8		10.1	9.9	0.94		9.4	9.3	1.07		9.2	8.8	1.25

Manufacturer reserves the right to change, at any time, specifications and designs without notice and without obligations.

Detailed Cooling Capacities# - Comfort + Dehumidify Mode

EVAPORATOR AIR °F (°C)		CONDENSER ENTERING AIR TEMPERATURES °F (°C)																											
		65.0 (18.3)				75.0 (23.9)				85.0 (29.4)				95.0 (35.0)				105.0 (40.6)				115.0 (46.1)				125.0 (51.7)			
EDB	EWB	ID SCFM	Capacity		Total Sys. KW**	ID SCFM	Capacity		Total Sys. KW**	ID SCFM	Capacity		Total Sys. KW**	ID SCFM	Capacity		Total Sys. KW**	ID SCFM	Capacity		Total Sys. KW**	ID SCFM	Capacity		Total Sys. KW**	ID SCFM	Capacity		Total Sys. KW**
			Total	Sens‡			Total	Sens‡			Total	Sens‡			Total	Sens‡			Total	Sens‡			Total	Sens‡			Total	Sens‡	
290VAN048 Maximum Demand																													
75 (23.9)	72.0 (22.2)	1150	53	21.8	2.18	1150	50	21.6	2.58	1150	48	20.8	2.99	1150	51.5	20.4	4.04	1050	48.5	19	4.42	1000	45	18	4.84	1000	33.8	15.8	4.01
	67.0 (19.4)		48	28	2.22		45.5	28	2.61		44	27	3.03		47	26.4	4.03		44.5	24.4	4.4		41.5	23.2	4.81		31	21.8	3.99
	63.0 (17.2)††		44.5	32.6	2.25		42.5	32.8	2.66		40.5	32	3.01		43.5	31	4		41	28.6	4.32		38	27.4	4.7		28.6	26.2	3.93
	57.0 (13.9)		40	39.5	2.29		38	38	2.66		36.6	36.6	3.02		39.5	37.6	4		37	34.6	4.28		34.4	33.2	4.64		26.8	26.8	3.92
80 (26.7)	72.0 (22.2)	1150	52.5	27.8	2.16	1150	50	27.8	2.58	1150	48	27	2.99	1150	51.5	26.2	4.06	1050	48.5	24.2	4.43	1000	45	23.2	4.86	1000	33.8	21.6	4.04
	67.0 (19.4)		48	33.8	2.22		45.5	34	2.62		43.5	33.2	3		47	32	4.04		44	29.6	4.37		41	28.4	4.77		30.8	27.4	3.98
	63.0 (17.2)††		44.5	38.5	2.25		42.5	39	2.65		40.5	38	3.01		43.5	36.6	4.01		41	33.8	4.33		38.5	32.4	4.75		28.8	28.8	3.95
	57.0 (13.9)		41.5	41.5	2.28		40	40	2.67		38.5	38.5	3.02		41	40.5	4		38.5	37.6	4.31		36	35.8	4.69		28.4	28.4	3.94
290VAN048 Intermediate Demand																													
75 (23.9)	72.0 (22.2)	825	33.4	12.9	0.97	825	31.4	12.8	1.22	850	29.8	12.3	1.47	875	32.8	13.5	2.06	875	31.2	12.7	2.34	875	29	12.2	2.63	950	23	10.6	2.58
	67.0 (19.4)		30.2	17.1	1.02		28.4	17.1	1.26		27	16.7	1.5		29.8	18.2	2.08		28.2	17.3	2.33		26.2	16.8	2.6		20.8	15.8	2.57
	63.0 (17.2)††		28	20.4	1.06		26.2	20.4	1.29		25	20.2	1.52		27.6	21.8	2.09		26	21	2.33		24.2	20.4	2.59		19.3	19.3	2.55
	57.0 (13.9)		25.4	24.2	1.1		24	24	1.32		23.2	23.2	1.53		25.4	25.4	2.09		24.2	24.2	2.33		22.8	22.8	2.58		19.1	19.1	2.56
80 (26.7)	72.0 (22.2)	825	33.2	17.1	0.96	825	31.2	17.1	1.22	850	29.8	16.7	1.47	875	32.8	18.2	2.07	875	31	17.3	2.33	875	28.8	16.8	2.62	950	22.8	15.8	2.58
	67.0 (19.4)		30.2	21.2	1.02		28.4	21.4	1.27		27	21	1.5		29.8	22.8	2.09		28.2	21.8	2.35		26.2	21.4	2.61		20.8	20.8	2.57
	63.0 (17.2)††		28	24.4	1.06		26.4	24.6	1.3		25.2	24.2	1.52		27.6	26.2	2.08		26.2	25.2	2.34		24.4	24.4	2.59		20.4	20.4	2.56
	57.0 (13.9)		27	25.8	1.07		25.6	25.6	1.3		24.8	24.8	1.53		27	27	2.09		25.8	25.8	2.33		24.4	24.4	2.6		20.4	20.4	2.57
290VAN048 Minimum Demand																													
75 (23.9)	72.0 (22.2)	500	21.2	8.2	0.5	500	19.8	8	0.67	500	18.6	7.6	0.83	500	21.4	8.3	1.25	500	20.2	7.8	1.45	500	18.6	7.4	1.64	500	16.7	7.2	1.86
	67.0 (19.4)		19.2	10.7	0.55		17.9	10.6	0.71		16.8	10.1	0.86		19.2	10.8	1.26		18.1	10.3	1.45		16.7	9.9	1.64		14.9	9.9	1.84
	63.0 (17.2)††		17.6	12.6	0.58		16.4	12.6	0.74		15.4	12.1	0.88		17.6	12.8	1.28		16.6	12.2	1.46		15.3	11.9	1.64		13.7	12	1.85
	57.0 (13.9)		15.8	15	0.61		14.9	14.7	0.76		14.2	14	0.9		15.8	15.1	1.28		15.1	14.2	1.46		14.1	13.6	1.63		12.8	12.8	1.82
80 (26.7)	72.0 (22.2)	500	21.2	10.7	0.5	500	19.7	10.6	0.67	500	18.5	10.2	0.83	500	21.2	10.9	1.25	500	20	10.3	1.44	500	18.4	10	1.63	500	16.5	10	1.85
	67.0 (19.4)		19.1	13.1	0.55		17.8	13.1	0.71		16.7	12.7	0.86		19.1	13.4	1.26		18	12.8	1.45		16.6	12.5	1.64		14.9	12.6	1.85
	63.0 (17.2)††		17.6	15	0.58		16.4	15.1	0.73		15.4	14.7	0.88		17.6	15.3	1.28		16.6	14.7	1.46		15.3	14.4	1.63		14	14	1.85
	57.0 (13.9)		16.9	16	0.6		15.9	15.7	0.74		15.2	15	0.89		16.9	16.2	1.28		16.1	15.2	1.46		15.1	14.5	1.64		13.8	13.8	1.84

Detailed Cooling Capacities# - Comfort + Dehumidify Mode

EVAPORATOR AIR °F (°C)		CONDENSER ENTERING AIR TEMPERATURES °F (°C)																											
		65.0 (18.3)				75.0 (23.9)				85.0 (29.4)				95.0 (35.0)				105.0 (40.6)				115.0 (46.1)				125.0 (51.7)			
EDB	EWB	ID SCFM	Capacity		Total Sys. KW**	ID SCFM	Capacity		Total Sys. KW**	ID SCFM	Capacity		Total Sys. KW**	ID SCFM	Capacity		Total Sys. KW**	ID SCFM	Capacity		Total Sys. KW**	ID SCFM	Capacity		Total Sys. KW**	ID SCFM	Capacity		Total Sys. KW**
			Total	Sens‡			Total	Sens‡			Total	Sens‡			Total	Sens‡			Total	Sens‡			Total	Sens‡			Total	Sens‡	
290VAN060 Maximum Demand																													
75 (23.9)	72.0 (22.2)	1600	69	27.8	3.41	1500	67	27.8	3.95	1400	63	26.6	4.41	1300	60	25	4.93	1150	55.5	23.2	5.43	1000	52	21.8	6.19	800	40	17.8	5.33
	67.0 (19.4)		62.5	36	3.4		61	35.8	3.95		57.5	34.2	4.4		54.5	32	4.88		50.5	29.4	5.35		47	27.4	6.03		36	22.6	5.23
	63.0 (17.2)††		58	42.5	3.4		56.5	42	3.94		53	40	4.35		50	37.4	4.8		46.5	34.2	5.26		43.5	31.8	5.91		33.2	26.4	5.17
	57.0 (13.9)		52.5	51.5	3.4		51	51	3.92		48	48	4.32		45	45	4.74		42	41.5	5.21		39	38	5.8		29.6	29.6	5.07
80 (26.7)	72.0 (22.2)	1600	69	35.8	3.42	1500	67	35.8	3.96	1400	63	34.2	4.41	1300	59.5	32	4.9	1150	55.5	29.4	5.44	1000	52	27.4	6.19	800	39.5	22.8	5.28
	67.0 (19.4)		62.5	44	3.4		60.5	43.5	3.92		57.5	41.5	4.4		54	39	4.84		50.5	35.6	5.36		47	32.8	6.03		36	27.4	5.23
	63.0 (17.2)††		58	50.5	3.4		56.5	50	3.93		53	47.5	4.34		50.5	44.5	4.85		46.5	40.5	5.26		43.5	37.2	5.93		33.2	31.2	5.17
	57.0 (13.9)		55	55	3.4		53	53	3.9		50	50	4.33		47	47	4.77		43.5	43.5	5.24		40	40	5.83		30.8	30.8	5.1
290VAN060 Intermediate Demand																													
75 (23.9)	72.0 (22.2)	1030	40	15.8	1.26	1000	39	15.8	1.51	970	36.4	14.8	1.73	930	37.4	15.3	2.32	880	35.2	14.3	2.66	800	32.6	13.4	3.01	730	27	11.6	2.97
	67.0 (19.4)		36.4	21	1.29		35.4	21	1.55		32.8	19.9	1.75		33.8	20.2	2.33		31.8	18.9	2.66		29.4	17.8	2.99		24.4	15.6	2.96
	63.0 (17.2)††		33.6	25.2	1.31		32.6	25.2	1.57		30.4	23.8	1.78		31.2	24	2.34		29.2	22.6	2.64		27	21.2	2.97		22.2	18.8	2.91
	57.0 (13.9)		31	29.8	1.34		30	29.6	1.59		28	27.8	1.78		28.4	28.4	2.33		26.6	26.4	2.62		24.6	24.6	2.95		20.8	20.8	2.92
80 (26.7)	72.0 (22.2)	1030	40	21	1.26	1000	39	21	1.52	970	36.2	19.9	1.72	930	37.4	20.2	2.33	880	35	19	2.65	800	32.6	17.8	3.02	730	27	15.7	2.98
	67.0 (19.4)		36.2	26.2	1.29		35.2	26.4	1.54		32.8	25	1.75		33.8	25.2	2.34		31.6	23.6	2.65		29.4	22	3.01		24.2	19.7	2.94
	63.0 (17.2)††		33.8	30.2	1.31		32.8	30.4	1.57		30.4	28.8	1.76		31.4	28.8	2.34		29.2	27	2.64		27.2	25.4	2.99		22.4	22.4	2.92
	57.0 (13.9)		32.8	31.8	1.32		32	31.6	1.58		30	29.6	1.78		30.4	30.2	2.34		28.4	28.2	2.63		26.2	26.2	2.96		22.2	22.2	2.93
290VAN060 Minimum Demand																													
75 (23.9)	72.0 (22.2)	600	21.6	8.5	0.51	500	20.8	8.4	0.66	500	19.9	8.1	0.81	500	22.6	8.9	1.24	500	21.2	8.3	1.46	500	19.8	8	1.68	500	18.6	7.9	1.99
	67.0 (19.4)		19.5	11	0.55		18.7	11	0.69		17.8	10.7	0.84		20.2	11.4	1.25		19	10.8	1.47		17.7	10.5	1.69		16.6	10.6	1.99
	63.0 (17.2)††		17.9	13	0.57		17.1	13	0.71		16.3	12.7	0.86		18.5	13.4	1.27		17.3	12.8	1.47		16.1	12.5	1.68		15.1	12.7	1.97
	57.0 (13.9)		16	15.4	0.6		15.5	15.3	0.73		14.8	14.7	0.87		16.4	15.8	1.27		15.5	15	1.47		14.7	14.4	1.68		14	14	1.96
80 (26.7)	72.0 (22.2)	600	21.4	11	0.51	500	20.8	11.1	0.66	500	19.8	10.8	0.81	500	22.4	11.5	1.23	500	21.2	10.9	1.46	500	19.8	10.6	1.69	500	18.5	10.7	1.98
	67.0 (19.4)		20	14.9	0.55		18.6	13.6	0.69		17.8	13.3	0.84		20.2	14	1.26		18.9	13.4	1.47		17.6	13.1	1.68		16.5	13.4	1.98
	63.0 (17.2)††		17.9	15.5	0.57		17.2	15.6	0.71		16.3	15.3	0.85		18.5	15.9	1.27		17.3	15.3	1.47		16.2	15.1	1.69		15.2	15.2	1.97
	57.0 (13.9)		17.1	16.5	0.58		16.6	16.4	0.72		15.9	15.8	0.86		17.5	16.9	1.26		16.7	16	1.48		15.8	15.4	1.68		15.1	15.1	1.98

† Total and sensible capacities are net capacities. Blower motor heat has been subtracted.

‡ Sensible capacities shown are based on 80°F (27°C) entering air at the indoor coil. For sensible capacities at other than 80°F (27°C), deduct 835 Btuh (245 kW) per 1000 CFM (480 L/S) of indoor coil air for each degree below 80°F (27°C), or add 835 Btuh (245 kW) per 1000 CFM (480 L/S) of indoor coil air per degree above 80°F (27°C).

** System kw is total of indoor and outdoor unit kilowatts.

Detailed cooling capacities are based on indoor and outdoor unit at the same elevation per AHRI standard 210/240-08. If additional tubing length and/or indoor unit is located above outdoor unit, a slight variation in capacity may occur.

NOTE: When the required data falls between the published data, interpolation may be performed. Extrapolation is not an acceptable practice.

EDB— Entering Dry Bulb **EWB** — Entering Wet Bulb

Manufacturer reserves the right to change, at any time, specifications and designs without notice and without obligations.

Heat Pump Heating Performance - Efficiency Mode

INDOOR AIR °F (°C)	OUTDOOR ENTERING AIR TEMPERATURES °F (°C)																																	
	-3 (-19.4)				7 (-13.9)				17 (-8.3)				27 (-2.8)				37 (2.7)				47 (8.3)				57 (13.9)				67 (19.4)			
EDB	ID SCFM	Capacity MBtuh		Total Sys. KW†	ID SCFM	Capacity MBtuh		Total Sys. KW†	ID SCFM	Capacity MBtuh		Total Sys. KW†	ID SCFM	Capacity MBtuh		Total Sys. KW†	ID SCFM	Capacity MBtuh		Total Sys. KW†	ID SCFM	Capacity MBtuh		Total Sys. KW†	ID SCFM	Capacity MBtuh		Total Sys. KW†	ID SCFM	Capacity MBtuh		Total Sys. KW†
		Total	Integ‡			Total	Integ‡			Total	Integ‡			Total	Integ‡			Total	Integ‡			Total	Integ‡			Total	Integ‡			Total	Integ‡	
290VAN024 Maximum Demand																																		
65 (18.3)	900	12.5	11.5	1.4	900	18.3	16.8	2.22	900	20.6	18.9	2.36	900	24	21.4	2.44	900	27.6	25.2	2.54	900	24.4	24.4	1.82	900	26.6	26.6	1.76	900	28.8	28.8	1.82
70 (21.1)		12.3	11.4	1.44		18.2	16.7	2.3		22	20	2.42		23.8	21.2	2.55		27.4	25	2.66		24.6	24.6	2.06		26.4	26.4	1.87		28.6	28.6	1.92
75 (23.9)		12.2	11.3	1.5		18.1	16.7	2.39		20.4	18.7	2.58		23.8	21	2.68		27.2	24.8	2.77		24	24	2.02		26.2	26.2	1.97		28.2	28.2	2.03
290VAN024 Intermediate Demand																																		
65 (18.3)	765	8	7.3	0.91	765	10.9	10	1.21	765	12.7	11.6	1.29	720	11.8	10.5	0.99	700	12.2	11.1	0.87	635	11.7	11.7	0.73	635	12.6	12.6	0.67	675	14.1	14.1	0.66
70 (21.1)		7.9	7.2	0.96		10.8	9.9	1.27		12.6	11.5	1.36		11.6	10.3	1.04		12	10.9	0.91		11.5	11.5	0.78		12.4	12.4	0.72		13.9	13.9	0.71
75 (23.9)		7.7	7.1	0.98		10.7	9.8	1.33		12.5	11.4	1.42		11.5	10.2	1.1		11.8	10.8	0.96		11.3	11.3	0.82		12.3	12.3	0.77		13.6	13.6	0.76
290VAN024 Minimum Demand																																		
65 (18.3)	500	5.7	5.2	0.67	500	6.9	6.4	0.79	500	8.3	7.5	0.85	500	5.3	4.7	0.44	500	3.8	3.5	0.25	500	4.8	4.8	0.3	500	5.2	5.2	0.27	500	5.7	5.7	0.24
70 (21.1)		5.6	5.1	0.71		6.8	6.3	0.83		8.1	7.4	0.89		5.2	4.6	0.47		3.9	3.5	0.31		5	5	0.3		5.1	5.1	0.29		5.7	5.7	0.27
75 (23.9)		5.4	5	0.73		6.7	6.2	0.87		8	7.3	0.93		5.1	4.5	0.5		3.8	3.4	0.33		4.5	4.5	0.34		5	5	0.31		5.6	5.6	0.29

Manufacturer reserves the right to change, at any time, specifications and designs without notice and without obligations.

Heat Pump Heating Performance - Efficiency Mode (Continued)

INDOOR AIR °F (°C)	OUTDOOR ENTERING AIR TEMPERATURES °F (°C)																													
	-3 (-19.4)				7 (-13.9)				17 (-8.3)				27 (-2.8)				37 (2.7)				47 (8.3)				57 (13.9)				67 (19.4)			
EDB	ID SCFM	Capacity MBtuh		Total Sys. KW†	ID SCFM	Capacity MBtuh		Total Sys. KW†	ID SCFM	Capacity MBtuh		Total Sys. KW†	ID SCFM	Capacity MBtuh		Total Sys. KW†	ID SCFM	Capacity MBtuh		Total Sys. KW†	ID SCFM	Capacity MBtuh		Total Sys. KW†	ID SCFM	Capacity MBtuh		Total Sys. KW†	ID SCFM	Capacity MBtuh		Total Sys. KW†
		Total	Integ‡			Total	Integ‡			Total	Integ‡			Total	Integ‡			Total	Integ‡			Total	Integ‡			Total	Integ‡			Total	Integ‡	
290VAN036 Maximum Demand																																
65 (18.3)	1200	19.3	17.7	2.28	1200	27.8	25.4	3.48	1200	32.2	29.4	3.84	1200	37	33	3.9	1170	39	35.4	3.46	1050	36.6	36.6	2.93	1155	37.2	37.2	2.65	1200	33.2	33.2	2.12
70 (21.1)		19.1	17.6	2.37		27.6	25.4	3.61		32.8	29.8	3.81		38.5	34.4	4.15		41	37.2	3.71		34.8	34.8	2.88		36.8	36.8	2.78		33.2	33.2	2.25
75 (23.9)		19	17.5	2.46		27.6	25.4	3.78		32.2	29.4	4.18		36.8	32.8	4.25		38.5	35	3.79		36	36	3.22		36.6	36.6	2.93		32.4	32.4	2.36
290VAN036 Intermediate Demand																																
65 (18.3)	900	11.8	10.9	1.33	900	16.4	15.1	1.75	900	19.6	17.9	1.9	830	17.6	15.6	1.39	800	16.3	14.8	1.09	750	16.3	16.3	1	785	17.2	17.2	0.93	785	16.6	16.6	0.78
70 (21.1)		11.7	10.8	1.39		16.3	15	1.84		19.4	17.7	1.99		17.4	15.4	1.47		16.1	14.6	1.16		16.1	16.1	1.07		17	17	1		16.4	16.4	0.85
75 (23.9)		11.6	10.7	1.45		16.1	14.8	1.92		19.3	17.6	2.08		17.2	15.3	1.54		15.8	14.4	1.22		15.9	15.9	1.14		16.8	16.8	1.07		16.1	16.1	0.91
290VAN036 Minimum Demand																																
65 (18.3)	750	8.4	7.7	0.95	750	10.2	9.4	1.08	750	12.4	11.3	1.14	645	7.5	6.6	0.56	600	5.4	4.9	0.34	600	6.6	6.6	0.36	600	7.5	7.5	0.34	580	8.2	8.2	0.32
70 (21.1)		8.2	7.6	0.99		10	9.2	1.12		12.2	11.1	1.2		7.3	6.5	0.59		5.3	4.8	0.38		6.4	6.4	0.36		7.3	7.3	0.37		8	8	0.36
75 (23.9)		8.1	7.5	1.04		9.9	9.1	1.18		12.1	11	1.27		7.2	6.4	0.63		5.1	4.7	0.4		6.2	6.2	0.42		7.2	7.2	0.41		7.8	7.8	0.39

Manufacturer reserves the right to change, at any time, specifications and designs without notice and without obligations.

Heat Pump Heating Performance - Efficiency Mode (Continued)

INDOOR AIR °F (°C)	OUTDOOR ENTERING AIR TEMPERATURES °F (°C)																																	
	-3 (-19.4)				7 (-13.9)				17 (-8.3)				27 (-2.8)				37 (2.7)				47 (8.3)				57 (13.9)				67 (19.4)			
EDB	ID SCFM	Capacity MBtuh		Total Sys. KW†	ID SCFM	Capacity MBtuh		Total Sys. KW†	ID SCFM	Capacity MBtuh		Total Sys. KW†	ID SCFM	Capacity MBtuh		Total Sys. KW†	ID SCFM	Capacity MBtuh		Total Sys. KW†	ID SCFM	Capacity MBtuh		Total Sys. KW†	ID SCFM	Capacity MBtuh		Total Sys. KW†	ID SCFM	Capacity MBtuh		Total Sys. KW†
		Total	Integ‡			Total	Integ‡			Total	Integ‡			Total	Integ‡			Total	Integ‡			Total	Integ‡			Total	Integ‡			Total	Integ‡	
290VAN048 Maximum Demand																																		
65 (18.3)	1450	22.2	20.4	2.58	1450	39	35.8	4.36	1450	46	42	4.81	1450	52.5	46.5	4.96	1420	55.5	50.5	4.76	1300	48.5	48.5	3.88	1450	47.5	47.5	3.41	1450	43	43	2.84
70 (21.1)		22	20.2	2.69		39	35.8	4.54		46	42	4.88		52	46.5	5.15		55	50	4.94		48.5	48.5	4.04		47	47	3.59		42.5	42.5	3.01
75 (23.9)		21.8	20.2	2.78		38.5	35.6	4.7		46	42	5.27		52	46	5.37		55.5	46.5	4.7		51	47	4.11		46.5	46.5	3.74		42	42	3.16
290VAN048 Intermediate Demand																																		
65 (18.3)	1150	17.7	16.3	1.98	1150	25.8	23.8	2.63	1150	31	28.2	2.89	1130	27.4	24.4	2.19	1200	24.8	22.6	1.76	965	23.8	23.8	1.59	1015	24.2	24.2	1.44	1015	23.4	23.4	1.24
70 (21.1)		17.5	16.1	2.07		25.6	23.6	2.74		30.6	28	3.01		27.2	24.2	2.3		24.6	22.4	1.86		23.4	23.4	1.68		24	24	1.54		23	23	1.33
75 (23.9)		17.4	16	2.16		25.4	23.4	2.86		30.4	27.8	3.14		27	24	2.43		24.4	22.2	1.96		23	23	1.77		23.6	23.6	1.62		22.8	22.8	1.43
290VAN048 Minimum Demand																																		
65 (18.3)	1000	15.3	14.1	1.71	1000	19.3	17.7	1.98	1000	23.4	21.2	2.16	860	15.1	13.4	1.13	800	10.1	9.1	0.62	800	11.5	11.5	0.65	800	12.6	12.6	0.64	800	13.6	13.6	0.61
70 (21.1)		15.2	14	1.8		19.1	17.6	2.07		23	21	2.25		14.8	13.2	1.2		9.9	9	0.67		11.4	11.4	0.68		12.4	12.4	0.69		13.4	13.4	0.67
75 (23.9)		15	13.8	1.88		18.9	17.4	2.18		22.8	20.8	2.35		14.6	13	1.27		9.7	8.8	0.71		11.1	11.1	0.76		12.2	12.2	0.74		13.2	13.2	0.72

Manufacturer reserves the right to change, at any time, specifications and designs without notice and without obligations.

Heat Pump Heating Performance - Efficiency Mode (Continued)

INDOOR AIR °F (°C)	OUTDOOR ENTERING AIR TEMPERATURES °F (°C)																													
	-3 (-19.4)				7 (-13.9)				17 (-8.3)				27 (-2.8)				37 (2.7)				47 (8.3)				57 (13.9)				67 (19.4)			
EDB	ID SCFM	Capacity MBtuh		Total Sys. KW†	ID SCFM	Capacity MBtuh		Total Sys. KW†	ID SCFM	Capacity MBtuh		Total Sys. KW†	ID SCFM	Capacity MBtuh		Total Sys. KW†	ID SCFM	Capacity MBtuh		Total Sys. KW†	ID SCFM	Capacity MBtuh		Total Sys. KW†	ID SCFM	Capacity MBtuh		Total Sys. KW†	ID SCFM	Capacity MBtuh		Total Sys. KW†
		Total	Integ‡			Total	Integ‡			Total	Integ‡			Total	Integ‡			Total	Integ‡			Total	Integ‡			Total	Integ‡			Total	Integ‡	
290VAN060 Maximum Demand																																
65 (18.3)	1530	32.6	30	3.62	1850	45.5	42	4.8	1850	55	50	5.37	1850	63.5	56	5.61	1850	65	59	5.84	1850	61.5	61.5	5.67	1850	56	56	4.37	1770	48.5	48.5	2.97
70 (21.1)		33.2	30.6	3.86		45.5	42	5.01		54.5	50	6.14		63	56	5.84		64.5	58.5	6.1		59	59	4.78		55.5	55.5	4.62		48	48	3.17
75 (23.9)		33	30.4	4.03		45.5	41.5	5.25		54.5	49.5	5.83		62.5	55.5	6.07		63.5	58	6.33		60	60	6.19		55	55	4.86		47	47	3.33
290VAN060 Intermediate Demand																																
65 (18.3)	980	22	20.2	2.37	1080	29.6	27.2	2.85	1080	35.6	32.4	3.12	1080	32.4	28.8	2.34	1135	29	26.4	1.98	1080	28.2	28.2	1.96	1180	28.6	28.6	1.66	1165	27.4	27.4	1.26
70 (21.1)		21.6	19.9	2.47		29.4	27	2.99		35.2	32.2	3.26		32	28.4	2.46		28.6	26	2.1		27.8	27.8	2.09		28	28	1.77		27	27	1.37
75 (23.9)		21.4	19.7	2.59		29	26.6	3.12		34.8	31.8	3.4		31.6	28	2.59		28	25.6	2.21		27.4	27.4	2.22		27.6	27.6	1.9		26.4	26.4	1.48
290VAN060 Minimum Demand																																
65 (18.3)	700	16.1	14.8	1.79	700	19.8	18.2	1.92	700	23.6	21.6	2.03	700	14.8	13.1	0.98	700	11.5	10.5	0.73	700	13.1	13.1	0.82	840	15.1	15.1	0.76	860	17.3	17.3	0.7
70 (21.1)		15.8	14.6	1.87		19.5	17.9	2.01		23.2	21.2	2.12		14.4	12.8	1.04		11.2	10.2	0.79		12	12	0.69		14.7	14.7	0.83		16.8	16.8	0.77
75 (23.9)		15.6	14.3	1.95		19.2	17.6	2.1		23	21	2.23		14.1	12.5	1.1		10.9	9.9	0.84		12.4	12.4	0.95		14.3	14.3	0.91		16.4	16.4	0.85

NOTES:

† The kW values include the compressor, outdoor fan motor, and indoor blower motor. The kW from supplement heaters should be added to these values to obtain Total Sys. kilowatts.

‡ The Btuh heating capacity values shown are net integrated values from which the defrost effect has been subtracted. The Btuh heating from supplement heaters should be added to those values to obtain Total Sys. capacity.

NOTE: When the required data falls between the published data, interpolation may be performed. Extrapolation is not an acceptable practice.

EDB — Entering Dry Bulb

Manufacturer reserves the right to change, at any time, specifications and designs without notice and without obligations.

Heat Pump Heating Performance - Comfort Mode

INDOOR AIR °F (°C)	OUTDOOR ENTERING AIR TEMPERATURES °F (°C)																																	
	-3 (-19.4)				7 (-13.9)				17 (-8.3)				27 (-2.8)				37 (2.7)				47 (8.3)				57 (13.9)				67 (19.4)			
EDB	ID SCFM	Capacity		Total Sys. KW**	ID SCFM	Capacity		Total Sys. KW**	ID SCFM	Capacity		Total Sys. KW**	ID SCFM	Capacity		Total Sys. KW**	ID SCFM	Capacity		Total Sys. KW**	ID SCFM	Capacity		Total Sys. KW**	ID SCFM	Capacity		Total Sys. KW**	ID SCFM	Capacity		Total Sys. KW**
		Total	Integ‡			Total	Integ‡			Total	Integ‡			Total	Integ‡			Total	Integ‡			Total	Integ‡			Total	Integ‡			Total	Integ‡			
290VAN024 Maximum Demand																																		
65 (18.3)		12.3	11.3	1.4		18.3	16.8	2.27		20.6	18.8	2.45		21.2	18.9	2.09		22.2	20.2	1.89		22.2	22.2	1.69		23.2	23.2	1.55		23.6	23.6	1.45
70 (21.1)	635	12.2	11.2	1.47	690	18.1	16.7	2.37	690	20.6	18.7	2.58	700	21.2	18.7	2.19	700	22	20	1.98	700	22	22	1.78	700	23	23	1.64	700	23.2	23.2	1.52
75 (23.9)		12.1	11.1	1.52		18.1	16.6	2.46		20.4	18.6	2.67		21	18.6	2.28		21.8	19.9	2.06		21.8	21.8	1.87		22.6	22.6	1.72		22.8	22.8	1.6
290VAN024 Intermediate Demand																																		
65 (18.3)		7.9	7.2	0.91		10.9	10	1.22		12.7	11.6	1.31		13.6	12.1	1.19		14.2	12.9	1.07		15.8	15.8	1.1		17.5	17.5	1.07		17.8	17.8	1
70 (21.1)	570	7.7	7.1	0.94	650	10.7	9.9	1.26	650	12.5	11.4	1.37	650	13.5	11.9	1.25	600	14.1	12.8	1.14	600	15.6	15.6	1.16	600	17.3	17.3	1.14	600	17.9	17.9	1.07
75 (23.9)		7.6	7	0.98		10.6	9.8	1.33		12.4	11.3	1.43		13.3	11.8	1.31		13.9	12.6	1.19		15.4	15.4	1.23		17.1	17.1	1.2		17.6	17.6	1.14
290VAN024 Minimum Demand																																		
65 (18.3)		5.7	5.2	0.67		6.9	6.4	0.79		8.3	7.5	0.85		9.8	8.7	0.84		10.1	9.2	0.73		12.3	12.3	0.82		14.5	14.5	0.87		15.6	15.6	0.86
70 (21.1)	500	5.6	5.1	0.71	500	6.8	6.3	0.83	500	8.1	7.4	0.89	500	9.6	8.6	0.88	500	10	9.1	0.77	500	12.1	12.1	0.87	500	14.3	14.3	0.92	500	15.3	15.3	0.91
75 (23.9)		5.4	5	0.73		6.7	6.2	0.87		8	7.3	0.93		9.5	8.4	0.93		9.9	9	0.82		11.9	11.9	0.92		14.1	14.1	0.98		15	15	0.96

Manufacturer reserves the right to change, at any time, specifications and designs without notice and without obligations.

Heat Pump Heating Performance - Comfort Mode (Continued)

INDOOR AIR °F (°C)	OUTDOOR ENTERING AIR TEMPERATURES °F (°C)																													
	-3 (-19.4)				7 (-13.9)				17 (-8.3)				27 (-2.8)				37 (2.7)				47 (8.3)				57 (13.9)				67 (19.4)			
EDB	ID SCFM	Capacity		Total Sys. KW**	ID SCFM	Capacity		Total Sys. KW**	ID SCFM	Capacity		Total Sys. KW**	ID SCFM	Capacity		Total Sys. KW**	ID SCFM	Capacity		Total Sys. KW**	ID SCFM	Capacity		Total Sys. KW**	ID SCFM	Capacity		Total Sys. KW**	ID SCFM	Capacity		Total Sys. KW**
		Total	Integ‡			Total	Integ‡			Total	Integ‡			Total	Integ‡			Total	Integ‡			Total	Integ‡			Total	Integ‡			Total	Integ‡	
290VAN036 Maximum Demand																																
65 (18.3)	975	18.4	17	2.14	975	27.4	25.2	3.49	985	31.8	29	3.85	1000	36.8	32.6	3.97	1000	38	34.8	3.42	1000	36	36	2.88	990	36.2	36.2	2.61	975	32.4	32.4	2.11
70 (21.1)		18.3	16.9	2.23		27.4	25.2	3.65		32.2	29.2	4.07		36.6	32.6	4.13		40	36.2	3.69		35.6	35.6	3.02		35.8	35.8	2.75		31.8	31.8	2.22
75 (23.9)		18.2	16.8	2.32		27.4	25.2	3.79		32	29.2	4.22		36.6	32.4	4.29		37.6	34.4	3.75		35.2	35.2	3.15		35.4	35.4	2.88		31.4	31.4	2.34
290VAN036 Intermediate Demand																																
65 (18.3)	650	11.4	10.5	1.29	650	15.9	14.7	1.73	650	19.1	17.4	1.9	650	22	19.6	1.91	650	23.6	21.6	1.82	670	24.6	24.6	1.8	700	26.2	26.2	1.74	700	24.8	24.8	1.5
70 (21.1)		15.8	14.5	1.68		15.8	14.5	1.81		18.9	17.3	1.99		21.8	19.4	2		23.8	21.8	1.93		24.4	24.4	1.9		26	26	1.84		24.4	24.4	1.59
75 (23.9)		15.6	14.4	1.75		21	19.3	2.04		21.2	19.4	2.11		21.6	19.3	2.08		23.2	21.2	2.01		24	24	2		25.6	25.6	1.93		24	24	1.67
290VAN036 Minimum Demand																																
65 (18.3)	550	8.1	7.5	0.93	550	9.9	9.1	1.06	550	12.1	11	1.15	550	14.3	12.7	1.15	550	16.7	15.2	1.21	550	19.1	19.1	1.37	550	21.2	21.2	1.39	550	20.8	20.8	1.26
70 (21.1)		8	7.4	0.98		9.8	9	1.11		12	10.9	1.21		14.1	12.6	1.21		16.5	15	1.28		18.9	18.9	1.44		21	21	1.48		20.4	20.4	1.33
75 (23.9)		7.8	7.2	1.01		9.7	8.9	1.17		11.8	10.8	1.27		14	12.4	1.27		16.3	14.8	1.35		18.6	18.6	1.51		20.6	20.6	1.55		20.2	20.2	1.42

Manufacturer reserves the right to change, at any time, specifications and designs without notice and without obligations.

Heat Pump Heating Performance - Comfort Mode (Continued)

INDOOR AIR °F (°C)	OUTDOOR ENTERING AIR TEMPERATURES °F (°C)																													
	-3 (-19.4)				7 (-13.9)				17 (-8.3)				27 (-2.8)				37 (2.7)				47 (8.3)				57 (13.9)				67 (19.4)			
EDB	ID SCFM	Capacity		Total Sys. KW**	ID SCFM	Capacity		Total Sys. KW**	ID SCFM	Capacity		Total Sys. KW**	ID SCFM	Capacity		Total Sys. KW**	ID SCFM	Capacity		Total Sys. KW**	ID SCFM	Capacity		Total Sys. KW**	ID SCFM	Capacity		Total Sys. KW**	ID SCFM	Capacity		Total Sys. KW**
		Total	Integ‡			Total	Integ‡			Total	Integ‡			Total	Integ‡			Total	Integ‡			Total	Integ‡			Total	Integ‡			Total	Integ‡	
290VAN048 Maximum Demand																																
65 (18.3)	1040	21.4	19.6	2.43	1200	38.5	35.4	4.31	1240	45.5	41.5	4.8	1340	52	46.5	4.92	1420	55.5	50.5	4.76	1300	48.5	48.5	3.88	1450	47.5	47.5	3.41	1450	43	43	2.84
70 (21.1)		21.2	19.4	2.55		38.5	35.2	4.51		45.5	41.5	5.01		52	46	5.15		55	50	4.94		48	48	4.07		47	47	3.59		42.5	42.5	3.01
75 (23.9)		21	19.3	2.63		38	35	4.68		45.5	41.5	5.25		51.5	46	5.35		55.5	46.5	4.7		51	47	4.11		46.5	46.5	3.74		42	42	3.16
290VAN048 Intermediate Demand																																
65 (18.3)	850	17.2	15.9	1.92	850	25.4	23.2	2.64	870	30.4	27.8	2.91	900	34.6	30.6	2.93	950	37.2	33.8	2.9	950	34.6	34.6	2.6	950	33.4	33.4	2.26	1000	31.2	31.2	1.9
70 (21.1)		17.1	15.7	2.02		25.2	23	2.76		30.2	27.4	3.05		34.2	30.4	3.06		36.8	33.6	3.05		34.2	34.2	2.74		33	33	2.38		31.4	31.4	2.04
75 (23.9)		16.9	15.5	2.1		25	23	2.88		29.8	27.2	3.16		34	30.2	3.19		36.6	33.2	3.19		33.8	33.8	2.86		32.6	32.6	2.5		30.8	30.8	2.15
290VAN048 Minimum Demand																																
65 (18.3)	800	15.1	13.9	1.69	800	19	17.5	1.97	800	23	21	2.16	800	26.4	23.4	2.19	800	29.4	26.8	2.26	800	27.2	27.2	1.96	800	27.2	27.2	1.76	800	25.8	25.8	1.49
70 (21.1)		14.9	13.7	1.76		18.8	17.3	2.07		22.8	20.8	2.27		26	23.2	2.28		29	26.4	2.36		26.8	26.8	2.07		26.8	26.8	1.86		25.4	25.4	1.58
75 (23.9)		14.7	13.5	1.84		18.6	17.1	2.16		22.4	20.4	2.36		25.8	22.8	2.39		28.8	26.2	2.48		26.4	26.4	2.17		26.4	26.4	1.96		25	25	1.69

Manufacturer reserves the right to change, at any time, specifications and designs without notice and without obligations.

Heat Pump Heating Performance - Comfort Mode (Continued)

INDOOR AIR °F (°C)	OUTDOOR ENTERING AIR TEMPERATURES °F (°C)																																	
	-3 (-19.4)				7 (-13.9)				17 (-8.3)				27 (-2.8)				37 (2.7)				47 (8.3)				57 (13.9)				67 (19.4)			
EDB	ID SCFM	Capacity		Total Sys. KW**	ID SCFM	Capacity		Total Sys. KW**	ID SCFM	Capacity		Total Sys. KW**	ID SCFM	Capacity		Total Sys. KW**	ID SCFM	Capacity		Total Sys. KW**	ID SCFM	Capacity		Total Sys. KW**	ID SCFM	Capacity		Total Sys. KW**	ID SCFM	Capacity		Total Sys. KW**
		Total	Integ‡			Total	Integ‡			Total	Integ‡			Total	Integ‡			Total	Integ‡			Total	Integ‡			Total	Integ‡			Total	Integ‡	
290VAN060 Maximum Demand																																		
65 (18.3)	1040	32.8	30.2	3.73	1240	44.5	41	4.76	1440	54	49	5.35	1620	62.5	55.5	5.55	1650	64	58.5	5.79	1690	60.5	60.5	5.61	1520	55	55	4.33	1200	46.5	46.5	2.98
70 (21.1)		32.6	30	3.92		44.5	40.5	5.02		53.5	49	5.56		62	55	5.79		63.5	58	6.04		60	60	5.9		54	54	4.55		45.5	45.5	3.13
75 (23.9)		32.4	29.8	4.06		44	40.5	5.16		53.5	48.5	5.81		61.5	54.5	6.05		63	57.5	6.32		59	59	6.13		53.5	53.5	4.78		45	45	3.33
290VAN060 Median Demand																																		
65 (18.3)	810	21.8	20	2.4	880	29.4	27	2.93	945	35.4	32.2	3.18	1010	40.5	36	3.23	1020	40	36.4	3.19	1030	37.2	37.2	2.96	970	33.6	33.6	2.23	870	29.4	29.4	1.52
70 (21.1)		21.4	19.8	2.51		29	26.8	3.06		35	32	3.33		40	35.6	3.37		39.5	36	3.35		36.6	36.6	3.14		33.2	33.2	2.37		28.8	28.8	1.64
75 (23.9)		21.2	19.5	2.61		28.8	26.4	3.2		34.6	31.6	3.47		39.5	35.2	3.51		39	35.4	3.51		36	36	3.28		32.6	32.6	2.51		28.2	28.2	1.74
290VAN060 Minimum Demand																																		
65 (18.3)	700	16.1	14.8	1.79	700	19.8	18.2	1.92	700	23.6	21.6	2.03	700	27.2	24.2	2.07	700	27.4	25	2.09	700	25	25	1.89	700	23.4	23.4	1.44	700	21.2	21.2	1
70 (21.1)		15.8	14.6	1.87		19.5	17.9	2.01		23.2	21.2	2.12		27	24	2.19		27	24.6	2.2		24.6	24.6	2		22.8	22.8	1.53		20.6	20.6	1.08
75 (23.9)		15.6	14.3	1.95		19.2	17.6	2.1		23	21	2.23		26.6	23.6	2.28		26.6	24.2	2.32		24.2	24.2	2.11		22.4	22.4	1.63		20.2	20.2	1.17

NOTES:
** The kW values include the compressor, outdoor fan motor, and indoor blower motor. The kW from supplement heaters should be added to these values to obtain Total Sys. kilowatts.
‡ The Btuh heating capacity values shown are net integrated values from which the defrost effect has been subtracted. The Btuh heating from supplement heaters should be added to those values to obtain Total Sys. capacity.
NOTE: When the required data falls between the published data, interpolation may be performed. Extrapolation is not an acceptable practice.
EDB — Entering Dry Bulb

Manufacturer reserves the right to change, at any time, specifications and designs without notice and without obligations.

Guide specifications
General

AIR-COOLED, SPLIT-SYSTEM HEAT PUMP
290VAN
2 TO 5 NOMINAL TONS

System Description

Outdoor-mounted, air-cooled, split-system heat pump unit suitable for ground or rooftop installation. Unit consists of a hermetic compressor, an air-cooled coil, forward-swept blade propeller-type condenser fan, and a control box. Unit will discharge supply air upward as shown on contract drawings. Unit will be used in a refrigeration circuit to match up to a packaged fan coil or coil unit.

Quality Assurance

- Unit will be rated in accordance with the latest edition of AHRI Standard 240.
- Unit will be certified for capacity and efficiency, and listed in the latest AHRI directory.
- Unit construction will comply with latest edition of ASHRAE and with NEC.
- Unit will be constructed in accordance with UL standards and will carry the UL label of approval. Unit will have C-UL approval.
- Unit cabinet will be capable of withstanding Federal Test Method Standard No. 141 (Method 6061) 500-hr salt spray test.
- Air-cooled condenser coils are pressure tested and the outdoor units are leak tested.
- Unit constructed in ISO9001 approved facility.

Delivery, Storage, and Handling

- Unit will be shipped as single package only and is stored and handled per unit manufacturer's recommendations.

Warranty (for inclusion by specifying engineer)

- U.S. and Canada only.

PRODUCTS

Equipment

- Factory-assembled, single-piece, air-cooled heat pump. Contained within the unit enclosure is all factory wiring, piping, controls, compressor, refrigerant charge Puron Advance™ (R-454B) refrigerant, and special features required prior to field start-up.

Unit Cabinet

- Unit cabinet will be constructed of galvanized steel, bonderized, and coated with a powder coat paint.

Fans

- Condenser fan will be direct-drive propeller type, forward swept blade, discharging air upward.
- Condenser fan motors will be totally enclosed, 1-phase type with class B insulation and permanently lubricated.
- Fan blades will be statically and dynamically balanced.
- Condenser fan openings will be equipped with coated steel wire safety guards.

Compressor

- Compressor will be hermetically sealed.
- Compressor will be mounted on rubber vibration isolators.
- Compressor will be covered with a sound absorbing blanket.

Condenser Coil

- Condenser coil will be air cooled.
- Coil will be constructed of aluminum fins mechanically bonded to copper or aluminum tubes which are then cleaned, dehydrated, and sealed.

Refrigeration Components

- Refrigeration circuit components will include liquid-line and vapor line front-seating shutoff valve with provisions for sweat or mechanical connections, system charge of Puron Advance™ (R-454B) refrigerant, PVE compressor oil, accumulator, electronic expansion valve, reversing valve, and pressure equalization valve.
- Unit will be equipped with high-pressure switch, suction and discharge pressure transducers, and filter drier for Puron Advance™ (R-454B) refrigerant.

Operating Characteristics

- The capacity of the unit will meet or exceed _____ Btuh at a suction temperature of _____ °F (°C). The power consumption at full load will not exceed _____ kW.
- Combination of the unit and the evaporator or fan coil unit will have a total net cooling capacity of _____ Btuh or greater at conditions of _____ CFM entering air temperature at the evaporator at _____ °F (°C) wet bulb and _____ °F (°C) dry bulb, and air entering the unit at _____ °F (°C).
- The system will have a SEER2 of _____ Btuh/watt or greater at DOE conditions.

Electrical Requirements

- Nominal unit electrical characteristics will be _____ v, single phase, 60 hz. The unit will be capable of satisfactory operation within voltage limits of _____ v to _____ v.
- Unit electrical power will be single point connection.
- Control circuit will be 24v.

Special Features

- Refer to section of this literature identifying accessories and descriptions for specific features and available enhancements.
- Evolution™ Connex™ System Control with appropriate software version is required for full featured operation.

Manufacturer reserves the right to change, at any time, specifications and designs without notice and without obligations.

System Design Summary

1. System must be installed with factory approved R454B Indoor unit only.
2. Factory authorized dissipation control board must be installed with indoor unit.
3. Must use Evolution™ Connex™ System Control listed in pre-sale literature only
4. Intended for outdoor installation with free air inlet and outlet. Outdoor fan external static pressure available is less than 0.01-in. wc.
5. This product is qualified for low ambient cooling operation (below 55°F / 12.8°C) with an Evolution™ Connex™ System Control **ONLY**.
6. The maximum outdoor operating ambient in cooling mode is 125°F (51.7°C).
7. Minimum outdoor operating air temperature for heating mode is –11°F (–23.9°C).
8. For reliable operation, unit should be level in all horizontal planes.
9. For interconnecting refrigerant tube lengths greater than 80 ft (23.4 m) and/or elevation differences between indoor and outdoor units greater than 20 ft (6.1 m), consult Residential Piping and Long Line Guideline and Service Manual available from equipment distributor.
10. If any refrigerant tubing is buried, provide a 6 in. (152.4 mm) vertical rise to the valve connections at the unit. Refrigerant tubing lengths up to 36 in. (914.4 mm) may be buried without further consideration. Do not bury refrigerant lines longer than 36 in. (914.4 mm).
11. Use only copper wire for electrical connection at unit. Aluminum and clad aluminum are not acceptable for the type of connector provided.
12. Do not apply capillary tube indoor coils to these units.
13. Factory-supplied filter drier must be installed.

© 2024 Carrier. All rights reserved.
Edition Date: 10/24
Catalog No: PDS290VAN-01
A Proud Member of the Carrier Family
Replaces: New
Manufacturer reserves the right to change, at any time, specifications and designs without notice and without obligations.