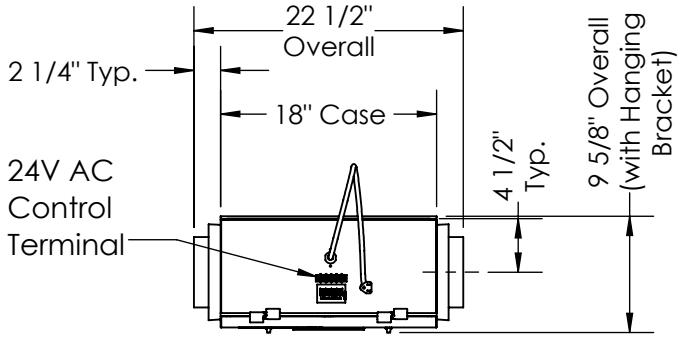

TOP VIEW

ABBREVIATIONS
EA: Exhaust Air to outside
OA: Outside Air intake
RA: Room Air to be exhausted
SA: Supply Air to inside

INSTALLATION ORIENTATION
Unit may be installed in any orientation.

NOTE
1.UNLESS OTHERWISE SPECIFIED, DIMENSIONS ARE ROUNDED TO THE NEAREST EIGHTH OF AN INCH.

2.SPECIFICATIONS MAY BE SUBJECT TO CHANGE WITHOUT NOTICE.

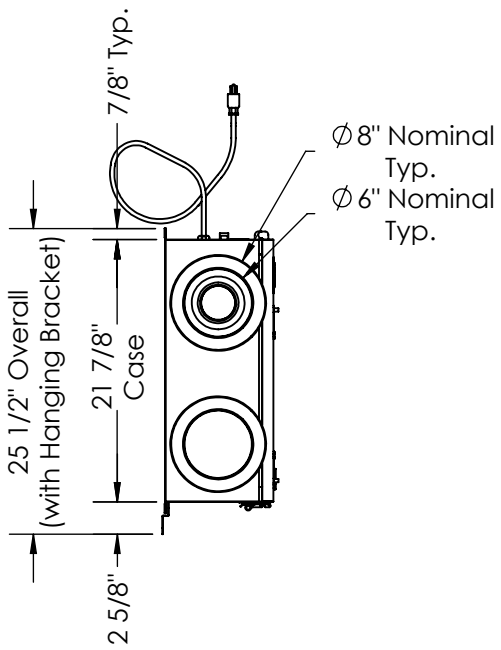

LEFT VIEW

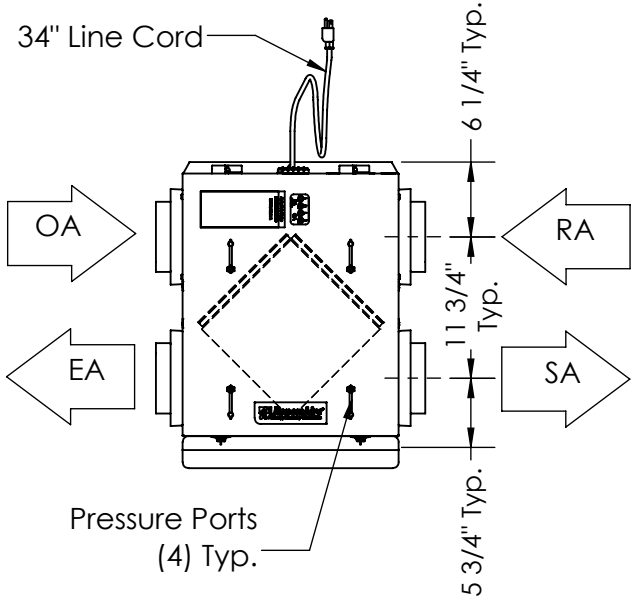

FRONT VIEW

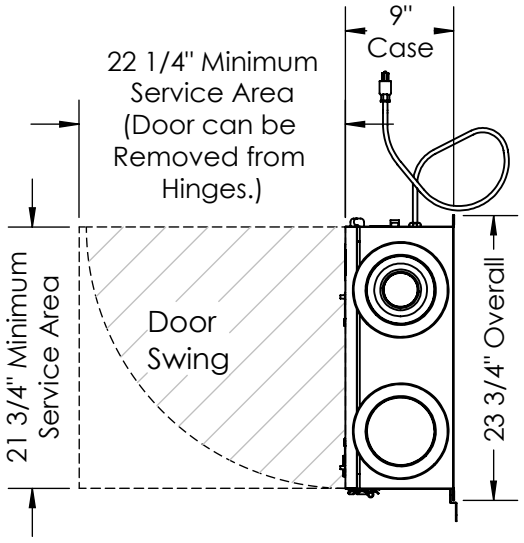

RIGHT VIEW

Model: EV Premium S
Drawing Type: Unit Dimension
Version: NOV23

RenewAire®
Energy Recovery Ventilation