FEATURES

- HEAVY GAUGE GALVANIZED STEEL.
- ALL WELDING CERTIFIED TO: ANSI/AWS D1.3 STRUCTURAL WELDING CODE–SHEET STEEL.
- TRANSITIONS LINED WITH 1"–1.5# INSULATION.
- SHIPPED FULLY ASSEMBLED.
- GASKET MATERIAL INCLUDED.

ESTIMATED WEIGHT
215 LBS

CFCCA-065
ADAPTER CURB

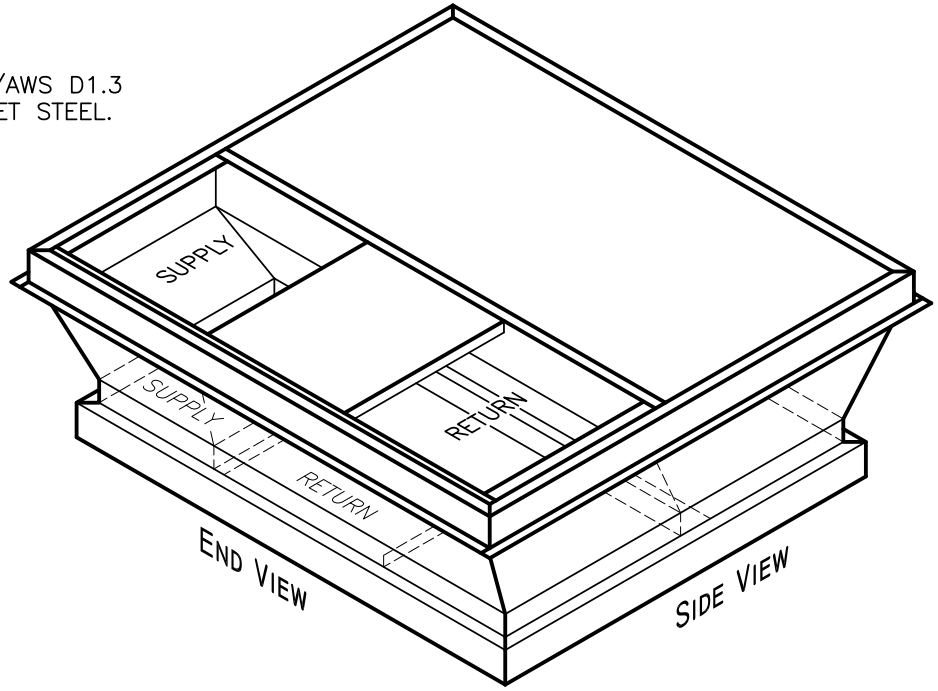

EXISTING: CARRIER
50SS/HS 018–060,
50HX 024–060

EXISTING: BRYANT
555A, 557A, 655A, 657A 018–060

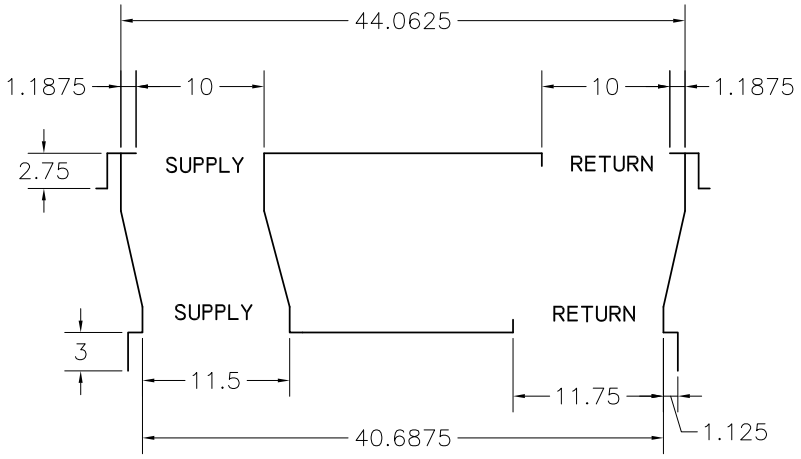

END VIEW

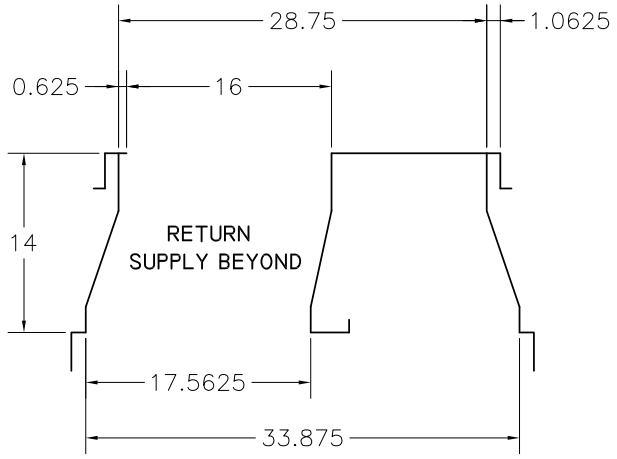

SIDE VIEW

CanFab
CANNON FABRICATION INC
182 GRANITE STREET, SUITE 101, CORONA, CA 92879
PHONE: (951)278–1830 FAX: (951)278–8444 www.canfab.com canfab@canfab.com

CARRIER 2 - 3 TON- 48/50 ES, EZ, 48/50VL-A 24-36, 48/50 VT, VG, 48/50VR, XL, XT-A 24-30

PART NO: SEE ABOVE	
DRAWING NO:	DATE:
APPROVED BY:	DATE: / /