Fan Coil Controller

Installation, Start-Up and Configuration Instructions

Part Number 33ZCFANCOL

CONTENTS

Page

SAFETY CONSIDERATIONS 1
GENERAL 1
INSTALLATION 2-26
General 2
Fan Coil Controller Hardware 2
Field-Supplied Hardware 2
- SPACE TEMPERATURE SENSOR
- SUPPLY AIR TEMPERATURE (SAT) SENSOR
- CHANGEOVER SENSOR
- LINKAGE THERMOSTAT
- RELATIVE HUMIDITY SENSOR
- INDOOR AIR QUALITY (CO_2) SENSOR

Mount Fan Coil Controller 2
- LOCATION
- MOUNTING

Connect the Power Transformer 4
Fan Coil Controller Inputs and Outputs 4
Install Sensors 13
- SPACE TEMPERATURE SENSOR INSTALLATION
- SUPPLY AIR TEMPERATURE (SAT) SENSOR INSTALLATION
- INDOOR AIR QUALITY SENSOR INSTALLATION
- HUMIDITY SENSOR (WALL-MOUNTED) INSTALLATION

Connect the Outputs 21
Connect Accessories 21
Connect the CCN Communication Bus 26
- COMMUNICATION BUS WIRE SPECIFICATIONS
- CONNECTION TO THE COMMUNICATION BUS

START-UP 27
Perform System Check-Out 27
Initial Operation and Test 27
Fan, Heat, and Cool Configuration and Test 27
CONFIGURATION 27-44
Points Display Table 27
Alarm Service Configuration Table 30
Controller Identification Screen 31
Holiday Configuration Screen 31
Occupancy Configuration Screen 31
Runtime Configuration Screen 32
Set Point Screen 32
Service Configuration Selection 34
Fan Coil Configuration 37
Occupancy Maintenance Table 39
Fan Coil Maintenance Table 40
Water System Manager Maintenance Screen 43

SAFETY CONSIDERATIONS

SAFETY NOTE

Air-handling equipment will provide safe and reliable service when operated within design specifications. The equipment should be operated and serviced only by authorized personnel who have a thorough knowledge of system operation, safety devices and emergency procedures.

Good judgement should be used in applying any manufacturer's instructions to avoid injury to personnel or damage to equipment and property.

⚠ WARNING

Disconnect all power to the unit before performing maintenance or service. Unit may automatically start if power is not disconnected. Electrical shock and personal injury could result.

⚠ WARNING

If it is necessary to remove and dispose of mercury contactors in electric heat section, follow all local, state, and federal laws regarding disposal of equipment containing hazardous materials.

⚠ CAUTION

Damage to equipment may result. An individual field-supplied 24-VAC power transformer is required for each fan coil controller. The transformer must be less than 100 VA to meet UL Class 2.

GENERAL

The Fan Coil Controller is a field retrofit, low cost, CCN (Carrier Comfort Network) control for fan coil units. The fan coil controller is a microprocessor-based direct digital control (DDC) controller for fan coil units. It can be retrofitted on direct drive fan units manufactured by Carrier or other manufacturers to provide precise temperature control for applications of 2,000 cfm or less.

The fan coil controller can function as either a stand-alone control or as part of the CCN. User interfaces include the CCN Service Tool, ComfortVIEW™, and ComfortWORKS® software. When used as part of the CCN, other devices such as the CCN Data Transfer, Linkage Thermostat, or Comfort Controller can read data from or write data to the fan coil controller.

INSTALLATION

General — The fan coil controller is connected to a wall-mounted, field-supplied, space temperature sensor (SPT) in order to monitor zone temperature changes and satisfy zone demand.

On all heating or cooling applications, the fan coil controller must be connected to a field-installed and -supplied supply air temperature (SAT) sensor to monitor the temperature of the air delivered by the fan coil.

Carrier's Network Service Tool can be connected to the system at the SPT sensor if CCN communication wiring is run to an RJ-11 jack at the SPT sensor. The Network Service Tool can be used to adjust set points, set operating parameters, and fully configure the fan coil controller or any device on the system. See Fig. 1.

Fan Coil Controller Hardware — The fan coil controller consists of the following hardware:

- control module
- plastic enclosure
- two no. 8 x $^1/_2$-in. sheet metal screws (for fan coil controller mounting to fan coil)

Figure 2 shows the fan coil controller physical details.

Field-Supplied Hardware — Each fan coil controller requires the following field-supplied components to complete its installation:

- fan coil unit
- space temperature sensor (33ZCT55SPT, 33ZCT56SPT, or 33ZCT57SPT)
- transformer — 24 vac, 40 va (standard applications)
- changeover sensor (required for 2-pipe applications)
- contactors (as required for fan, electric heat, or DX cooling)
- supply air temperature sensor (33ZCSENSAT) with two no. 10 x $^1/_2$-in. sheet metal screws (to secure SAT sensor to fan coil unit)
- indoor air quality sensor (as required)
- relative humidity sensor (as required)
- valve and actuator for hot water heat or chilled water (as required)
- linkage thermostat (as required)

SPACE TEMPERATURE SENSOR — Each fan coil controller requires a field-supplied Carrier space temperature sensor. There are three sensors available for this application:

- 33ZCT55SPT, Space Temperature Sensor with Override Button
- 33ZCT56SPT, Space Temperature Sensor with Override Button and Set Point Adjustment
- 33ZCT57SPT, Space Temperature Sensor with Override Button, Set Point Adjustment, and Manual Fan Speed control

SUPPLY AIR TEMPERATURE (SAT) SENSOR — The fan coil controller must be connected to a field-supplied supply air temperature (SAT) sensor (part number 33ZCSENSAT) to monitor the temperature of the air delivered by the fan coil.

CHANGEOVER SENSOR — The 33ZCSENCHG changeover sensor is used by the fan coil controller in 2-pipe applications to determine the temperature of the heating and cooling medium which is supplied to the fan coil by the building piping system. The fan coil controller can then determine if it is capable of providing heating or cooling to the space based on sensing the pipe water temperature. This value may be broadcast to other fan coils.

LINKAGE THERMOSTAT — The linkage thermostat (33CSKITLST-01) is used to control multiple units from a single thermostat. The linkage thermostat provides thermostat functions for up to 8 units. Thermostat functions include space temperature sensing, remote set point adjustment, and occupancy information. The linkage thermostat can be used in place of any space temperature sensor. If fail-safe operation is required, it is recommended to also install a 33ZCSENSAT in the return air duct of each unit, wired to the space temperature sensor input of the fan coil controller.

RELATIVE HUMIDITY SENSOR — The 33AMSENRHS000 relative humidity sensor is an indoor, wall-mounted sensor and is required for zone humidity control (dehumidification).

INDOOR AIR QUALITY (CO_2) SENSOR — An indoor air quality sensor is required for IAQ monitoring. Three different CO_2 sensors are available for zone CO_2 level monitoring.

The 33ZCSENCO2 sensor is an indoor, wall mounted sensor with an LED (light-emitting diode) display.

The 33ZCT55CO2 sensor is an indoor, wall mounted sensor without display. The CO_2 sensor also includes a space temperature sensor with override button.

The 33ZCT56CO2 sensor is an indoor, wall mounted sensor without display. The CO_2 sensor also includes a space temperature sensor with override button and temperature offset.

Mount Fan Coil Controller

LOCATION — The fan coil controller should be located inside one of the available service access panels of the fan coil unit. The fan coil controller may also be mounted on the exterior of the fan coil unit. Select a location which will be safe from water damage and allow sufficient access for service and wiring. For service access, there should be at least 6 in. of clearance between the front of the fan coil controller and adjacent surfaces. Refer to Fig. 3.

MOUNTING — Mount the fan coil controller to the desired location by holding the fan coil controller in place and screwing two no. 8, pan-head, Phillips, sheet metal screws provided through two of the holes available in the plastic base on the either side of the fan coil controller.

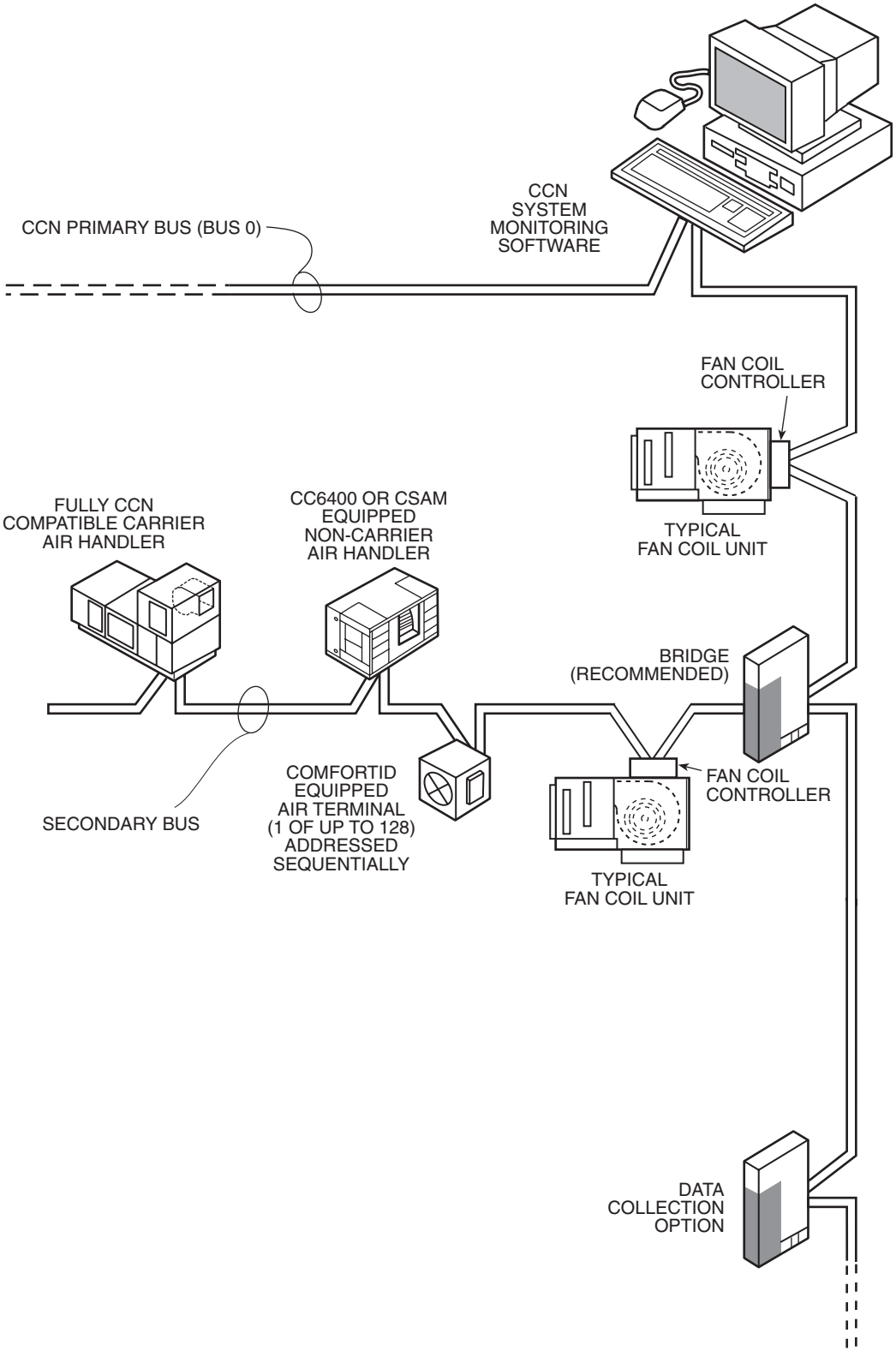

LEGEND

CCN — Carrier Comfort Network
CSAM — Comfort System *Air*Manager™

Fig. 1 — Typical Carrier Comfort Network System with Fan Coil Units

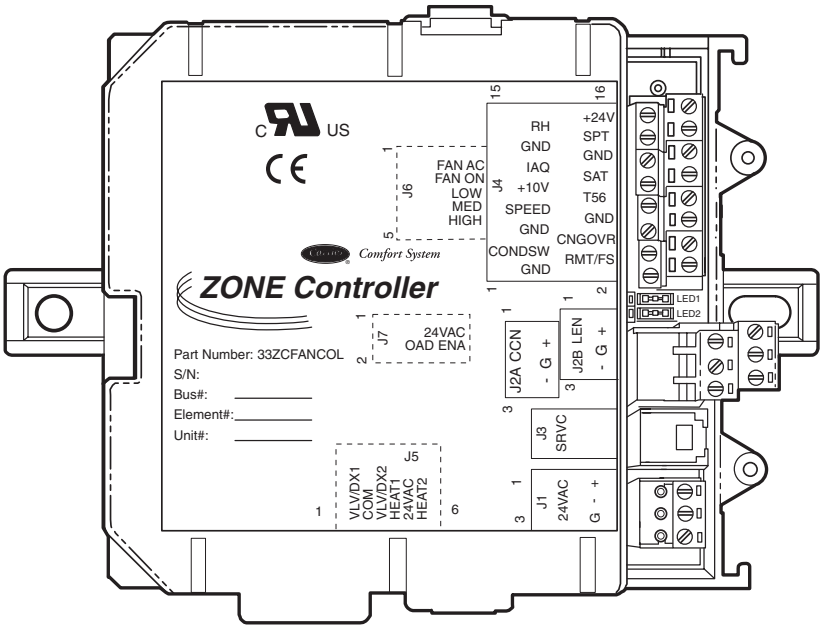

→ **Fig. 2 — Fan Coil Controller**

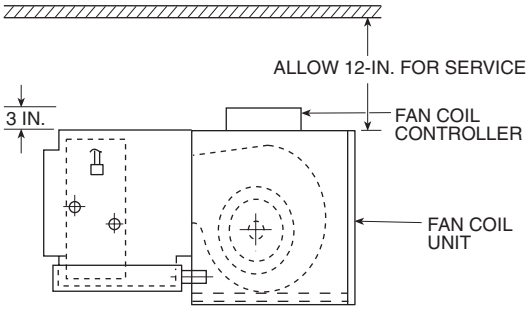

Fig. 3 — Service Clearance for Fan Coil Zone Controller Mounting

Connect the Power Transformer — An individual, field-supplied, 24 vac power transformer is required for each fan coil controller. Transformers must be UL Class 2 rated. Standard applications require a 24 VAC transformer, rated at 40 VA minimum. All transformer secondaries are required to be grounded. Use only stranded copper conductors for all wiring to the fan coil controller. Wiring connections must be made in accordance with NEC (National Electrical Code) and local codes. Ground one side of the transformer secondary at the transformer location. Connect the grounded side of the transformer to J1-2. Connect the live side of the transformer secondary to J1-1. Connect an 18-gage, green ground wire from terminal J1-3 to the metal chassis of the unit.

The power supply is 24 vac ± 10% at 40 va (50/60 Hz).

For fan coil controllers, the power requirement sizing allows for accessory water valves and for the fan contactor. Water valves are limited to 10 va on both two-position and modulating hot water. The fan contactor is limited to 3 va (holding) for each fan output.

NOTE: If a water valve contactor exceeds these limits, or external contactors are required for electric heat, then it is recommended a 60 va transformer be used. The maximum rating for any single output is 20 va.

NOTE: Do not run sensor or communication wiring in the same conduit with line-voltage wiring.

NOTE: An accessory conduit box (part no. 33ZCCONBOX) is available for conduit wiring connections to the fan coil controller.

Perform the following steps to connect the power transformer:

1. Install the field-supplied transformer in an electrical enclosure that conforms to NEC and local codes.
2. Connect 24 vac from the transformer as shown in the applicable wiring diagram (Fig. 4-10). Be sure to observe polarity when connecting the transformer power. The grounded terminal must be connected to the transformer ground terminal as shown.

Fan Coil Controller Inputs and Outputs — The fan coil controller inputs and outputs are shown in Fig. 11-13.

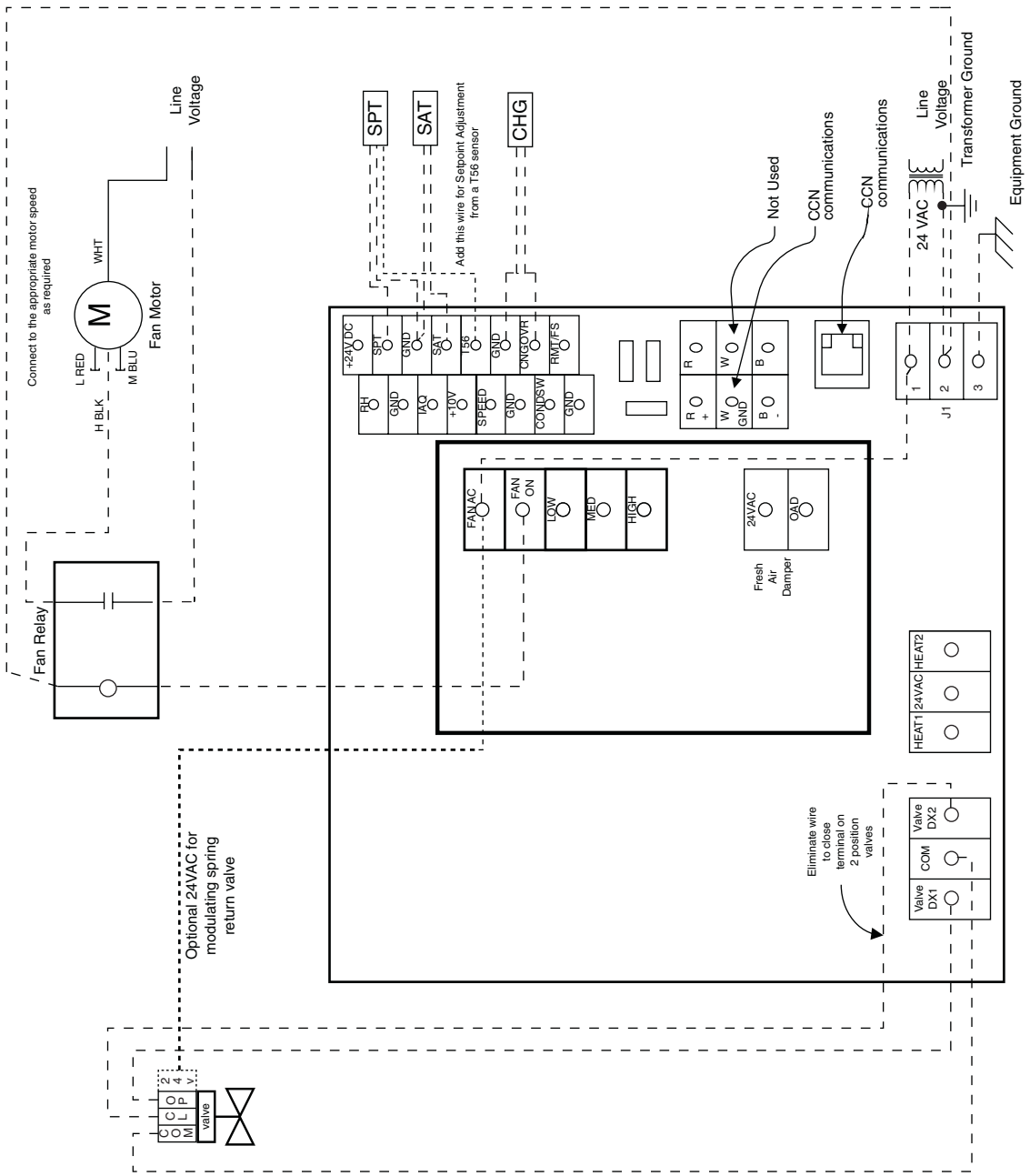

→ **Fig. 4 — Fan Coil Controller Wiring — Two-Pipe, Single Speed Fan Applications**

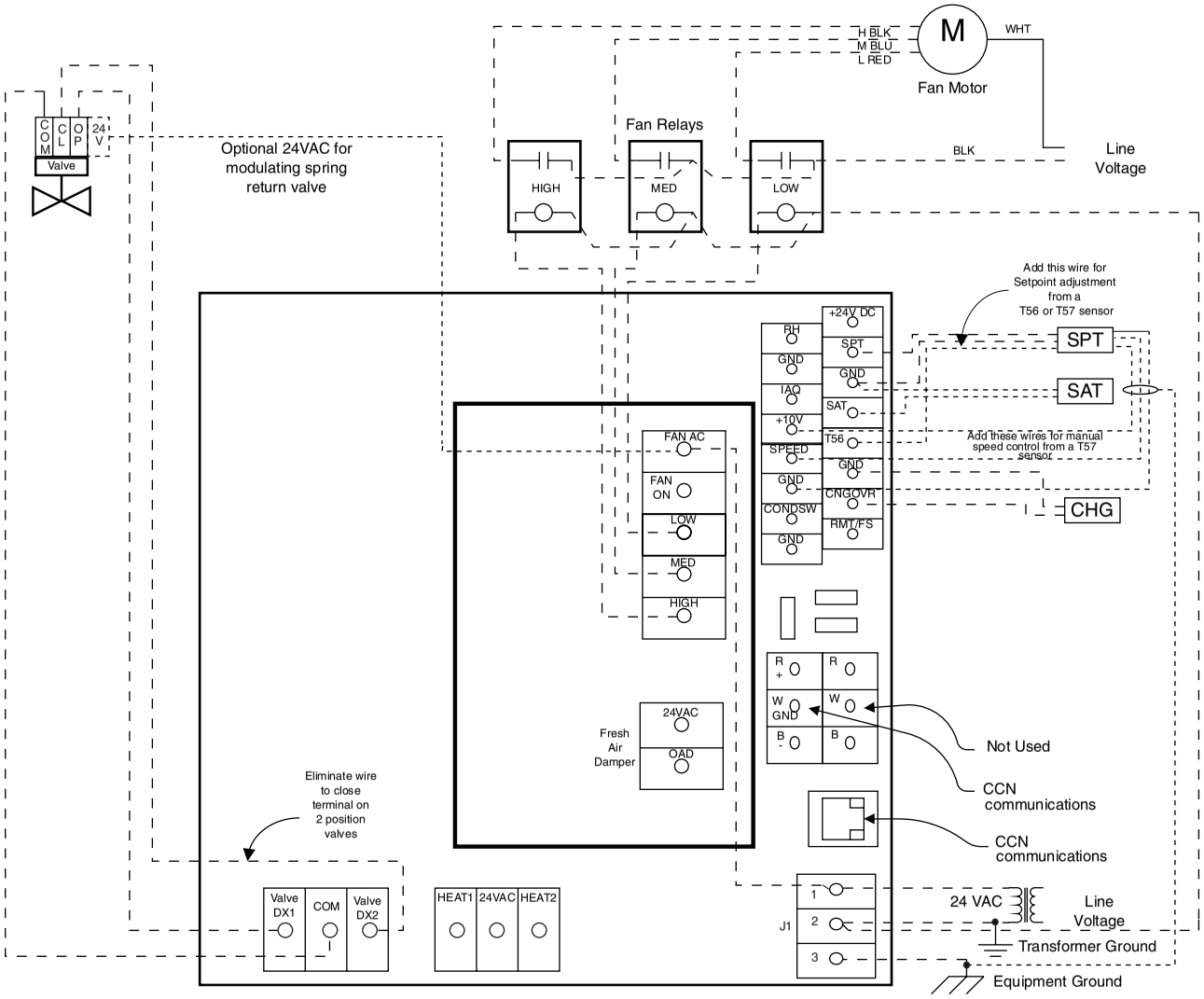

→ **Fig. 5 — Fan Coil Controller Wiring — Two-Pipe, Three-Speed Fan with Optional Manual Speed Control Applications**

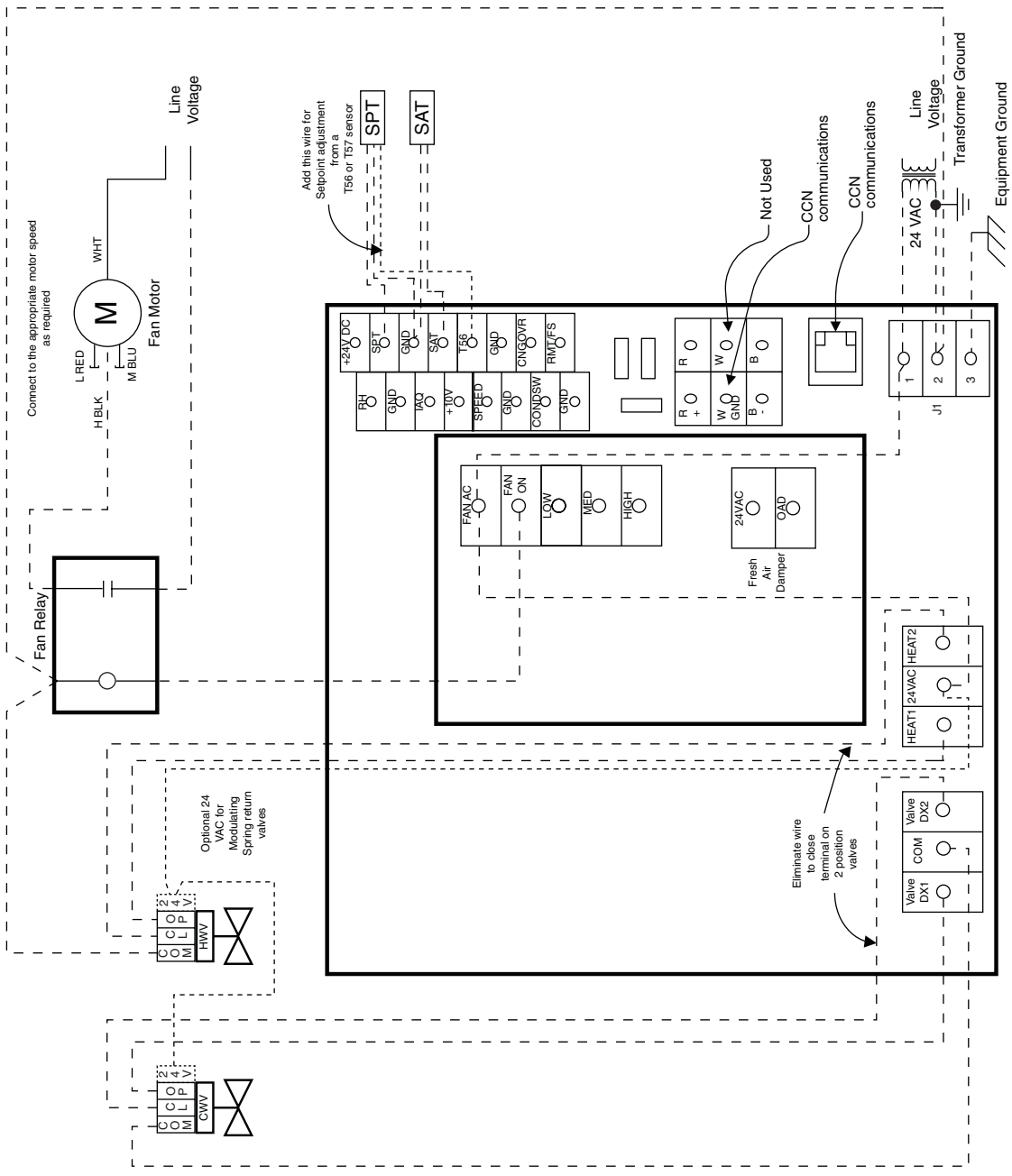

→ **Fig. 6 — Fan Coil Controller Wiring — Four-Pipe, Single Speed Applications**

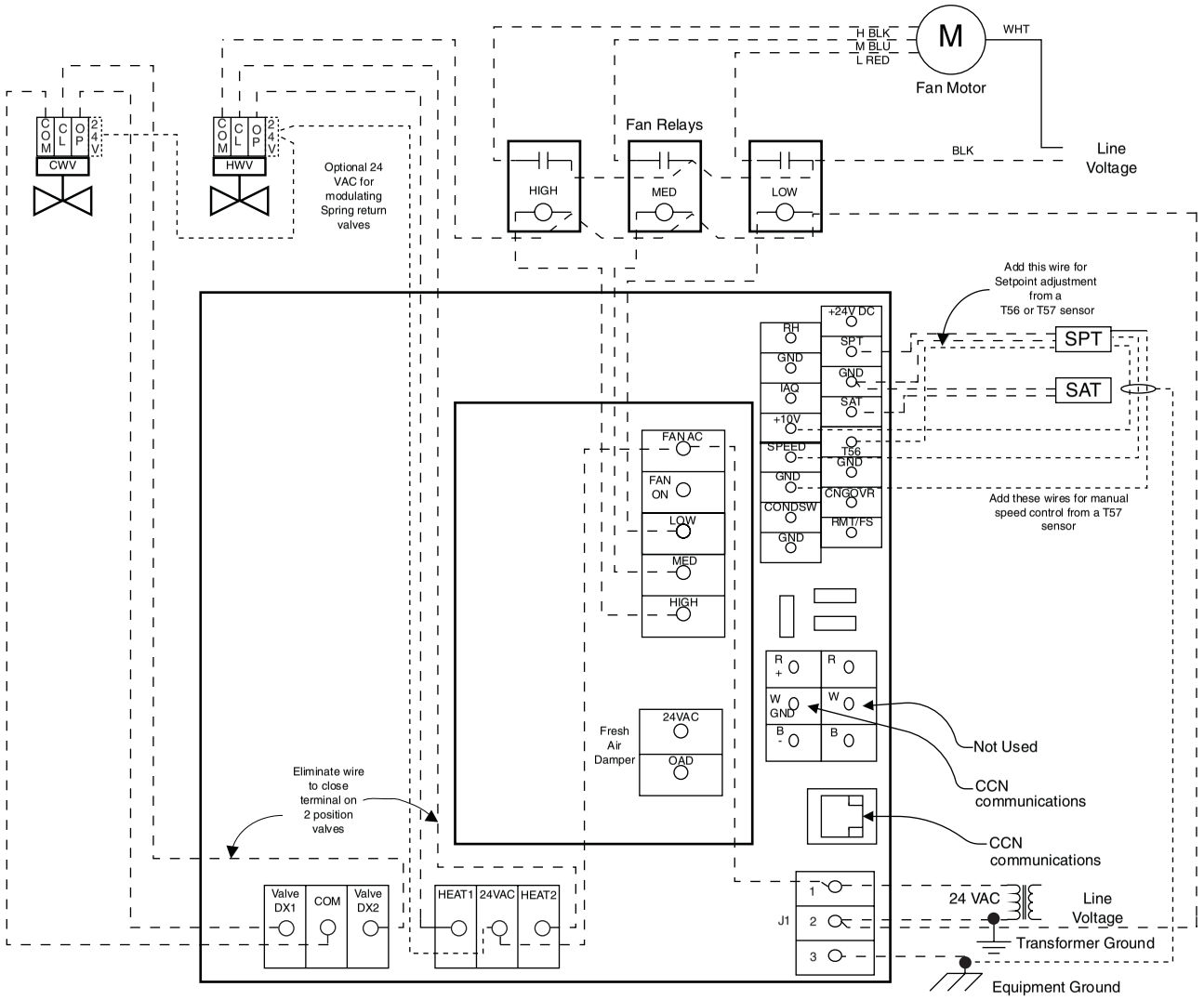

→ **Fig. 7 — Fan Coil Controller Wiring — Four-Pipe, Three-Speed Fan with Optional Manual Speed Control Applications**

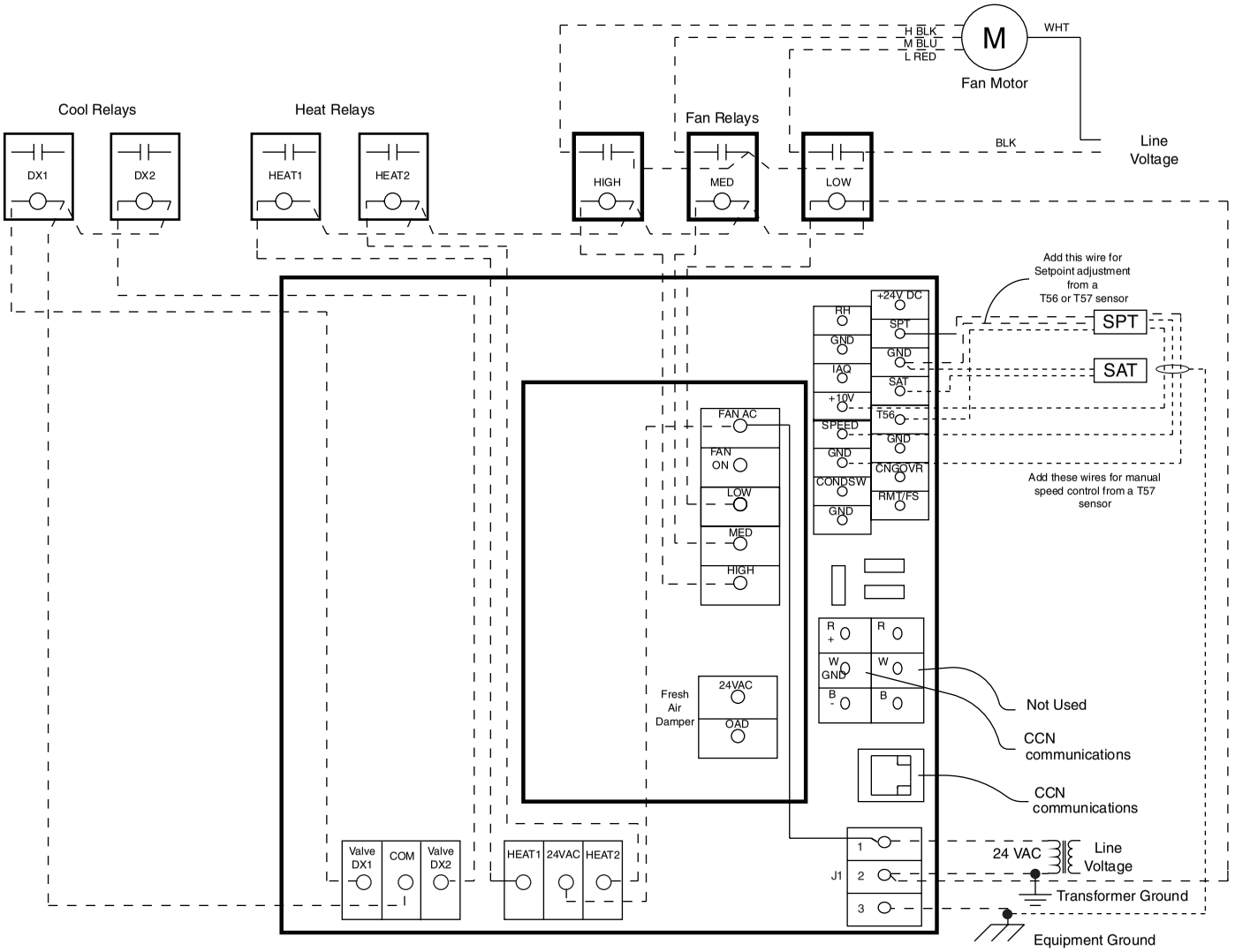

→ **Fig. 8 — Fan Coil Controller Wiring — Two-Stage DX Cooling, Two-Stage Electric Heat, Three-Speed Fan with Optional Manual Speed Control Applications**

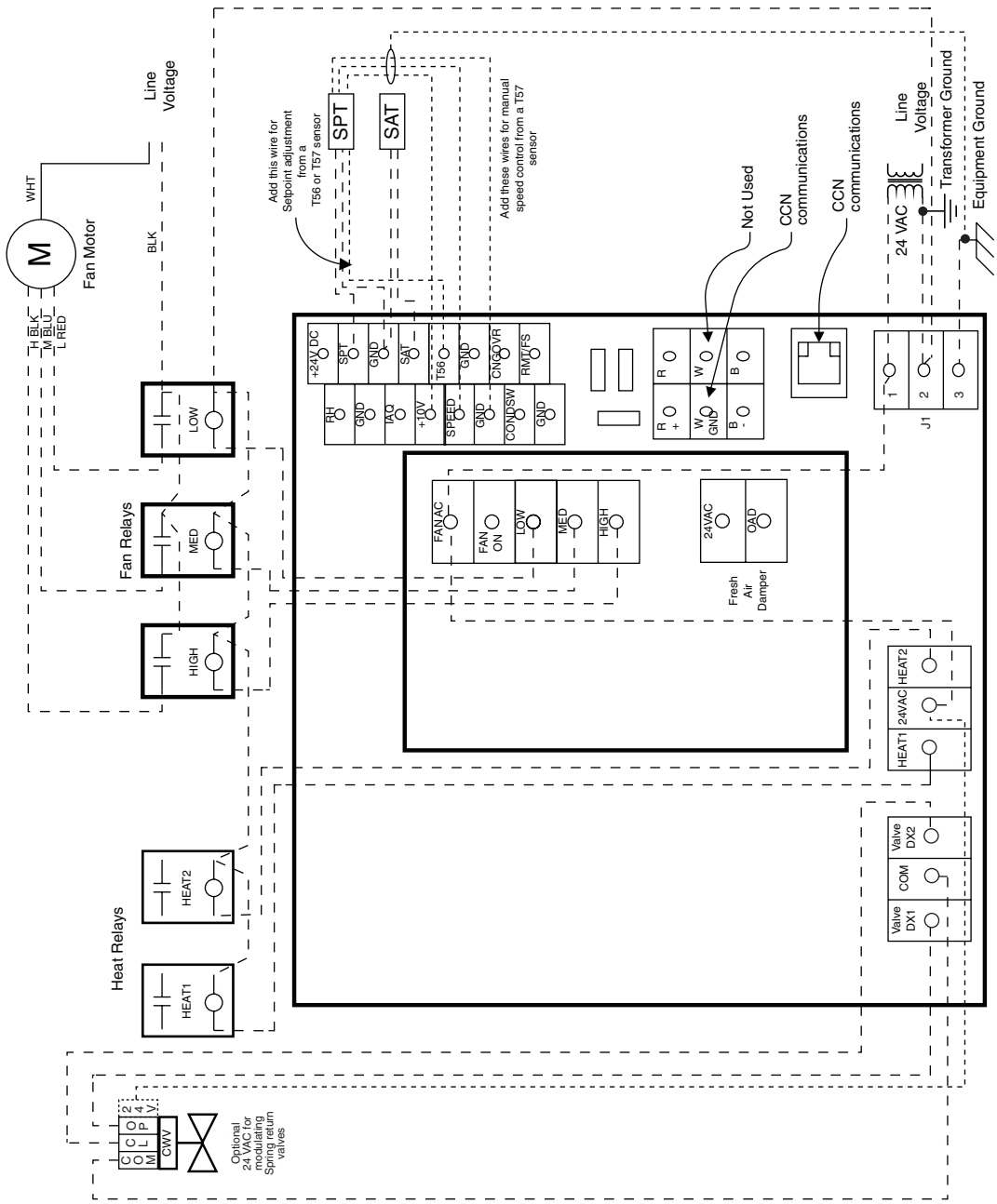

→ **Fig. 9 — Fan Coil Controller Wiring — Two-Stage DX Cooling, Modulating Heat, Three-Speed Fan with Optional Manual Speed Control Applications**

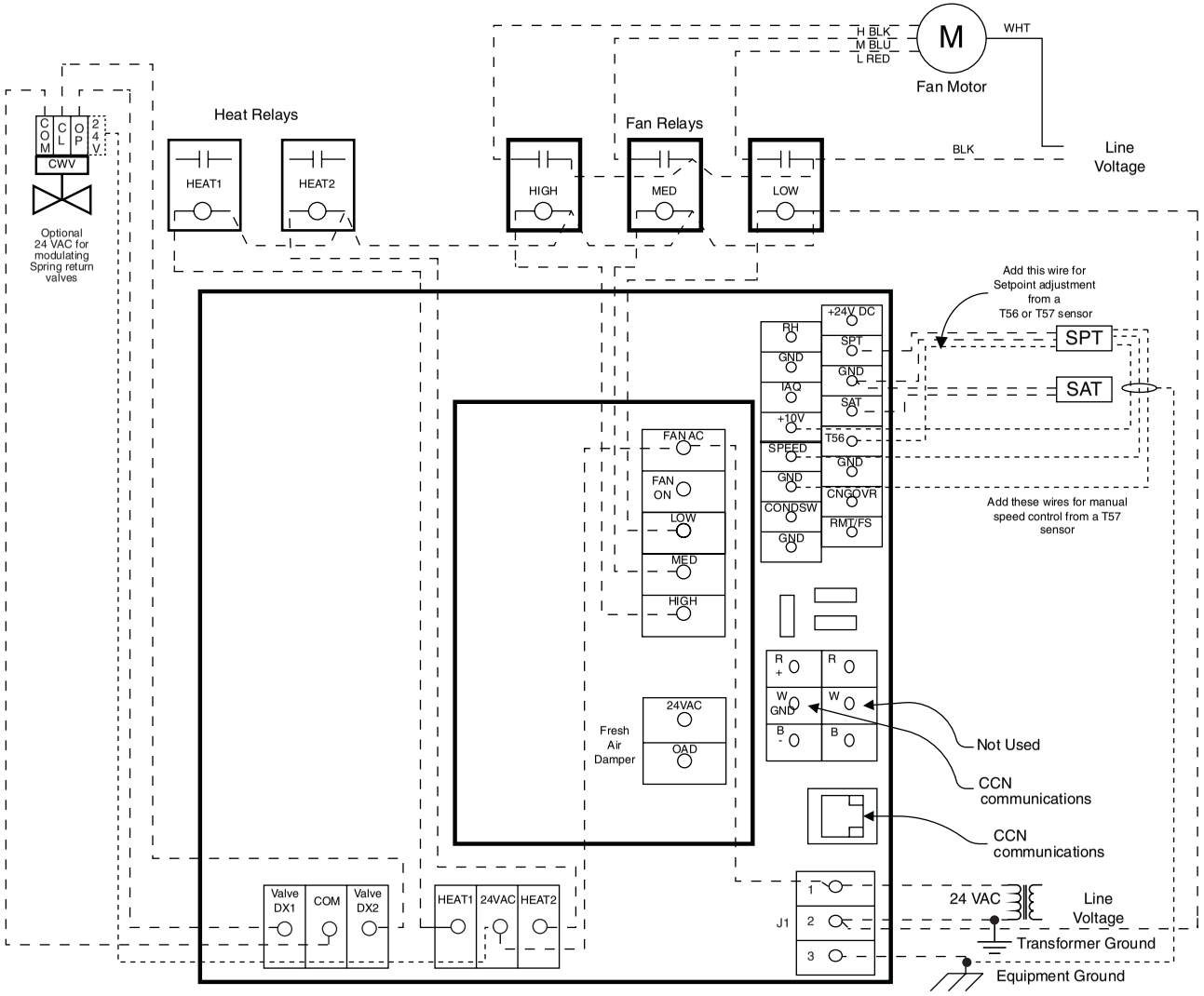

→ **Fig. 10 — Fan Coil Controller Wiring — Modulating Cooling, Two-Stage Electric Heat, Three-Speed Fan with Optional Manual Speed Control Applications**

Inputs (J4)

CHANNEL	J4 PINS (+,–)	DESCRIPTION	CONTROL DEVICE
SPT	14, 12	Space Temperature	10K Thermistor
SAT	10, 12	Supply Air Temperature	10K Thermistor
SP_OFFSET (T56/T57)	8, 12	Set Point Offset Adjust	100K Potentiometer
CNGOVR	4, 6	Changeover Sensor	10K Thermistor
RH	16 (24 VDC), 15 (+), 13 (–)	RH Sensor	2-10 VDC
SPEED	9*, 7 (+), 5 (–)	Manual Speed Position	0-10 VDC
CONDSW	3, 9*	Condensate Pump Sensor	0-10 V (DI)
IAQ	11 (+), 13 (–)	Indoor Air Quality Sensor	0-10 VDC
FS OR REMOTE S/S	2 (24 VDC), J1 Pin 1 (Gnd)	Fan Status or Remote Start/Stop	24 VAC (DI)

LEGEND

DI — Direct Input
FS — Fan Status
IAQ — Indoor Air Quality
RH — Relative Humidity
SAT — Supply-Air Temperature
SPT — Space Temperature
S/S — Start/Stop

*Use shielded wire.

NOTES:
1. Terminals 1 and 3 provide switched 24 VAC output power to the load.
2. Terminal 5 connects to field-supplied 24 VAC.
3. The 24 v connection (J4-16) is required for RH sensor only.

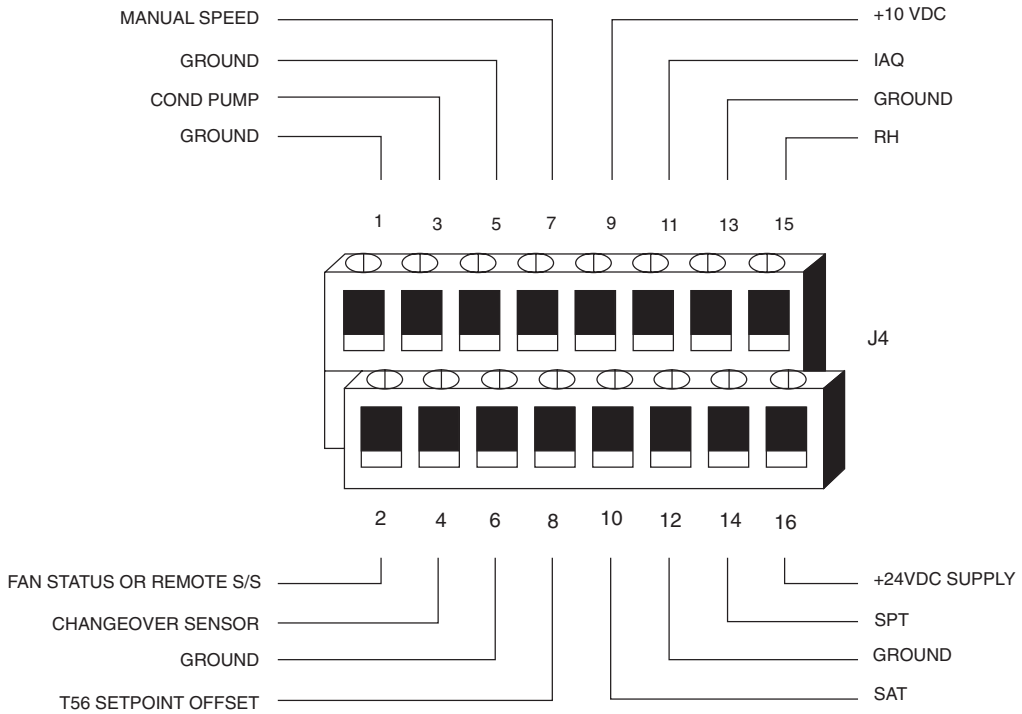

→ **Fig. 11 — Fan Coil Controller Inputs**

Daughter Board Outputs (J6, J7)

CHANNEL	TERMINATIONS(+,–)	DESCRIPTION	CONTROL DEVICE
FAN AC	J6-1, J1-1	Fan Input Power	24V, 5A
FAN ON	J6-2, J1-2	Fan Start/Stop*	24V, 5A
LOW	J6-3, J1-2	Low Speed	24V, 5A
MED	J6-4, J1-2	Med Speed	24V, 5A
HI	J6-5, J1-2	High Speed	24V, 5A
OAD	J7-1, J7-2	Outdoor Air Damper	24 VAC 1A

*For single-speed fan units, connect fan start/stop to control fan contactor.
NOTE: J6-1 must be jumpered to 24 VAC +. (J1-1).

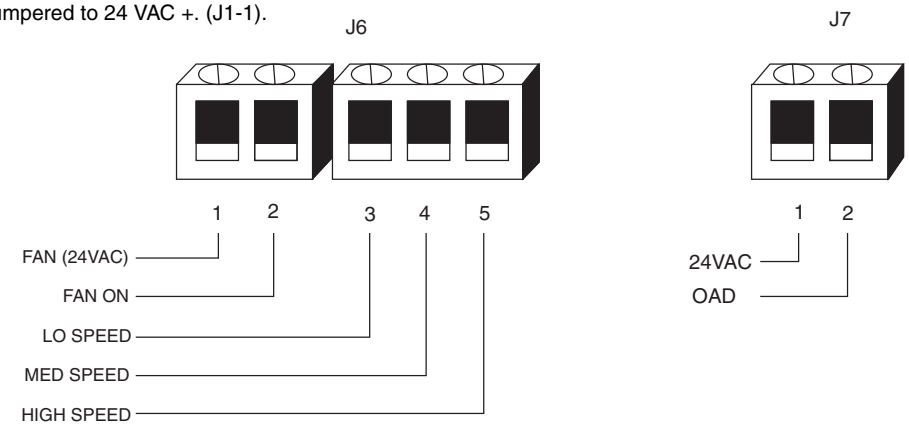

Fig. 12 — Fan Coil Controller Daughter Board Outputs

Baseboard Outputs (J5)

CHANNEL	J5 Pins (+,–)	DESCRIPTION	CONTROL DEVICE
Valve DX1	(A) 1, 2	Open	24 VAC, 1A
Valve DX2	(A) 3, 2	Close	24 VAC, 1A
HEAT_ST1	(B) 5, 4	Heat Open, 1st Stage	24 VAC, 1A
HEAT_ST2	(B) 5, 6	Heat Close, 2nd Stage	24 VAC, 1A

NOTES:
1. (A) Terminals 1 and 3 provide switched 24 VAC output power to the load.
2. (B) J5-5 must be jumpered to 24 VAC + (J1-1).

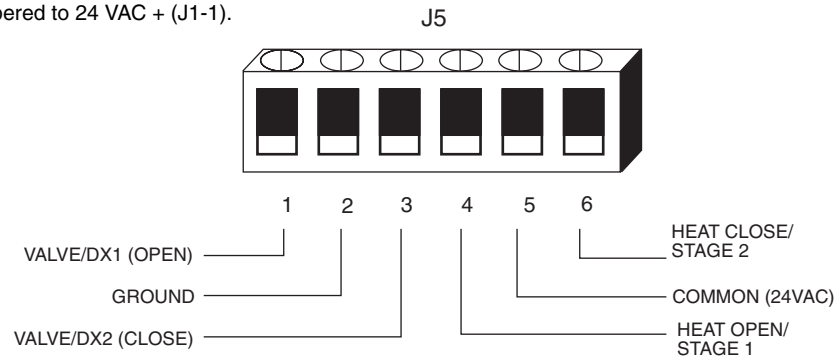

Fig. 13 — Fan Coil Controller Baseboard Outputs

Install Sensors

→ SPACE TEMPERATURE SENSOR INSTALLATION — A space temperature sensor must be installed for each fan coil controller. There are four types of SPT sensors available from Carrier: the 33ZCT55SPT space temperature sensor with timed override button, the 33ZCT56SPT space temperature sensor with timed override button and set point adjustment, the 33ZCT57SPT space temperature sensor with timed override button, set point adjustment, and manual fan speed control and the 33ZCT58SPT space temperature sensor with time override, set point adjustment, fan speed control, and LCD display. See Fig. 14 and 15.

The space temperature sensor is used to measure the building interior temperature and should be located on an interior building wall. The sensor wall plate accommodates the NEMA standard 2 x 4 junction box. The sensor can be mounted directly on the wall surface if acceptable by local codes.

Do not mount the sensor in drafty locations such as near air conditioning or heating ducts, over heat sources such as baseboard heaters, radiators, or directly above wall mounted lighting dimmers. Do not mount the sensor near a window which may be opened, near a wall corner, or a door. Sensors mounted in these areas will have inaccurate and erratic sensor readings.

The sensor should be mounted approximately 5 ft from the floor, in an area representing the average temperature in the space. Allow at least 4 ft between the sensor and any corner and mount the sensor at least 2 ft from an open doorway.

Install the sensor as follows (see Fig. 15):

1. Locate the two Allen type screws at the bottom of the sensor.
2. Turn the two screws clockwise to release the cover from the sensor wall mounting plate.
3. Lift the cover from the bottom and then release it from the top fasteners.
4. Feed the wires from the electrical box through the opening in the center of the sensor mounting plate.
5. Using two no. 6-32 x 1 mounting screws (provided with the sensor), secure the sensor to the electrical box.

   NOTE: Sensor may also be mounted directly on the wall using 2 plastic anchors and 2 sheet metal screws (field-supplied).
6. Use 20 gage wire to connect the sensor to the controller. The wire is suitable for distances of up to 500 ft. Use a three-conductor shielded cable for the sensor and set point adjustment connections. The standard CCN communication cable may be used. If the set point adjustment (slidebar) is not required, then an unshielded, 18 or 20 gage, two-conductor, twisted pair cable may be used.

   The CCN network service jack requires a separate, shielded CCN communication cable. Always use separate cables for CCN communication and sensor wiring. (Refer to Fig. 16-18 for wire terminations.)
7. Replace the cover by inserting the cover at the top of the mounting plate first, then swing the cover down over the lower portion. Rotate the two Allen head screws counterclockwise until the cover is secured to the mounting plate and locked in position.
8. For more sensor information, see Table 1 for thermistor resistance vs temperature values.

NOTE: Clean sensor with damp cloth only. Do not use solvents.

Wiring the Space Temperature Sensor — To wire the sensor, perform the following (see Fig. 16-18):

1. Identify which cable is for the sensor wiring.
2. Strip back the jacket from the cables for at least 3-inches. Strip $^1/_4$-in. of insulation from each conductor. Cut the shield and drain wire from the sensor end of the cable.
3. Connect the sensor cable as follows:
   a. Connect one wire from the cable (RED) to the SPT terminal on the controller. Connect the other end of the wire to the left terminal on the SEN terminal block of the sensor.

b. Connect another wire from the cable (BLACK) to the GND terminal on the controller. Connect the other end of the wire to the remaining open terminal on the SEN terminal block (COM on 33ZCT57SPT).

c. On 33ZCT56SPT and 33ZCT57SPT thermostats, connect the remaining wire (WHITE/CLR) to the T56 terminal on the controller. Connect the other end of the wire to the SET terminal on the sensor.

d. In the control box, install a no. 10 ring type crimp lug on the shield drain wire. Install this lug under the mounting screw of the fan coil controller.

e. On 33ZCT56SPT thermostats install a jumper between the two center terminals (right SEN and left SET). See Fig. 17.

f. On 33ZCT57SPT thermostats, a separate 3-conductor, shielded cable is used to connect the fan speed wiring. Connect the SPD terminal on the thermostat to the SPEED terminal on the fan coil controller. Use the white/clr wire. Connect the COM terminal on the thermostat to the GND terminal on the fan coil controller. Use the black wire. Connect the 10V terminal on the thermostat to the +10V terminal on the fan coil controller. Use the red wire.

   In the control box, install a no. 10 ring type crimp lug on the fan speed wiring shield drain wire. Install this lug under the mounting screw of the fan coil controller.

Wiring the CCN Network Communication Service Jack — See Fig. 16-18. To wire the service jack, perform the following:

1. Strip back the jacket from the CCN communication cable(s) for at least 3 inches. Strip 1/4-in. of insulation from each conductor. Remove the shield and separate the drain wire from the cable. Twist together all the shield drain wires and fasten them together using an closed end crimp lug or a wire nut. Tape off any exposed bare wire to prevent shorting.
2. Connect the CCN + signal wire(s) (RED) to Terminal 5.
3. Connect the CCN – signal wire(s) (BLACK) to Terminal 2.
4. Connect the CCN GND signal wire(s) (WHITE/CLR) to Terminal 4.

Before wiring the CCN connection, refer to the Connect the CCN Communication Bus section on page 26, for communication bus wiring and cable selection. The cable selected must be identical to the CCN communication bus wire used for the entire network.

The other end of the communication bus cable must be connected to the remainder of the CCN communication bus. If the cable is installed as a T-tap into the bus, the cable length cannot exceed 50 ft. No more than 10 T-taps are allowed per bus. Wire the CCN service jack of the sensor in a daisy chain arrangement with other equipment. Refer to the Connect to the CCN Communication Bus section, page 26, for more details. See Fig. 19.

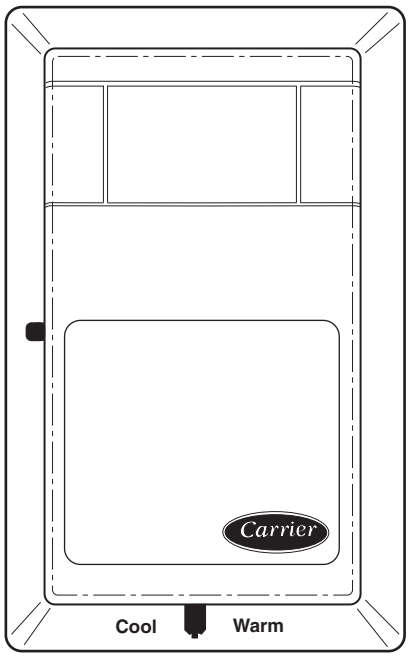

Fig. 14 — Space Temperature Sensor (P/N 33ZCT56SPT Shown)

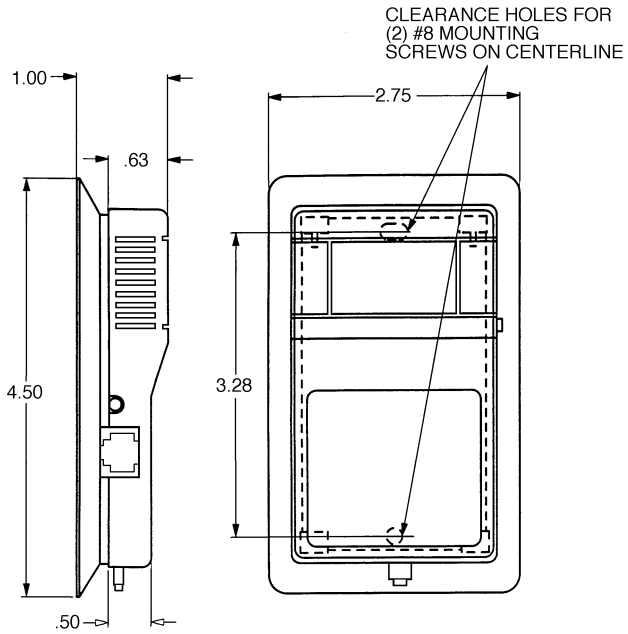

NOTE: Dimensions are in inches.

Fig. 15 — Space Temperature Sensor and Wall Mounted Humidity Sensor Mounting

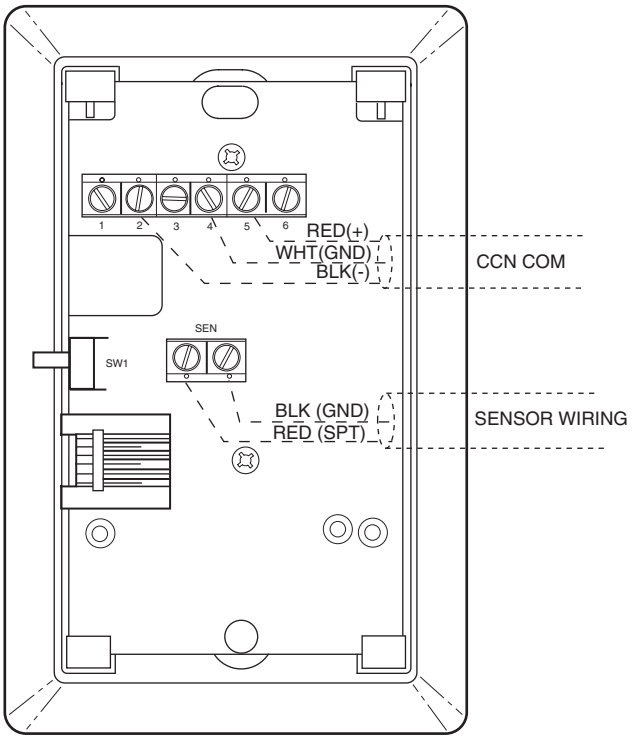

Fig. 16 — Space Temperature Sensor Wiring (33ZCT55SPT)

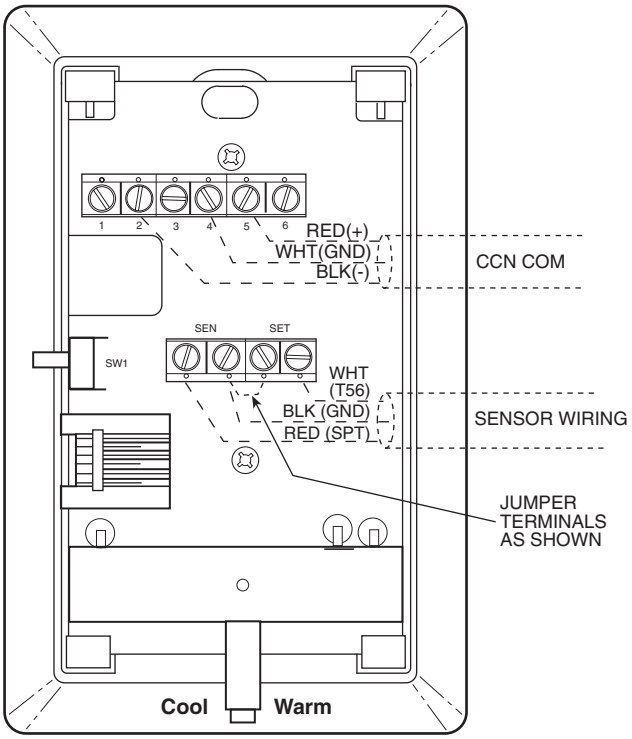

Fig. 17 — Space Temperature Sensor Wiring (33ZCT56SPT)

Table 1 — Thermistor Resistance vs Temperature Values for Space Temperature Sensor, Return-Air Temperature Sensor, and Supply-Air Temperature Sensor

TEMP (C)	TEMP (F)	RESISTANCE (Ohms)
–40	–40	335,651
–35	–31	242,195
–30	–22	176,683
–25	–13	130,243
–20	–4	96,974
–15	5	72,895
–10	14	55,298
–5	23	42,315
0	32	32,651
5	41	25,395
10	50	19,903
15	59	15,714
20	68	12,494
25	77	10,000
30	86	8,056
35	95	6,530
40	104	5,325
45	113	4,367
50	122	3,601
55	131	2,985
60	140	2,487
65	149	2,082
70	158	1,752

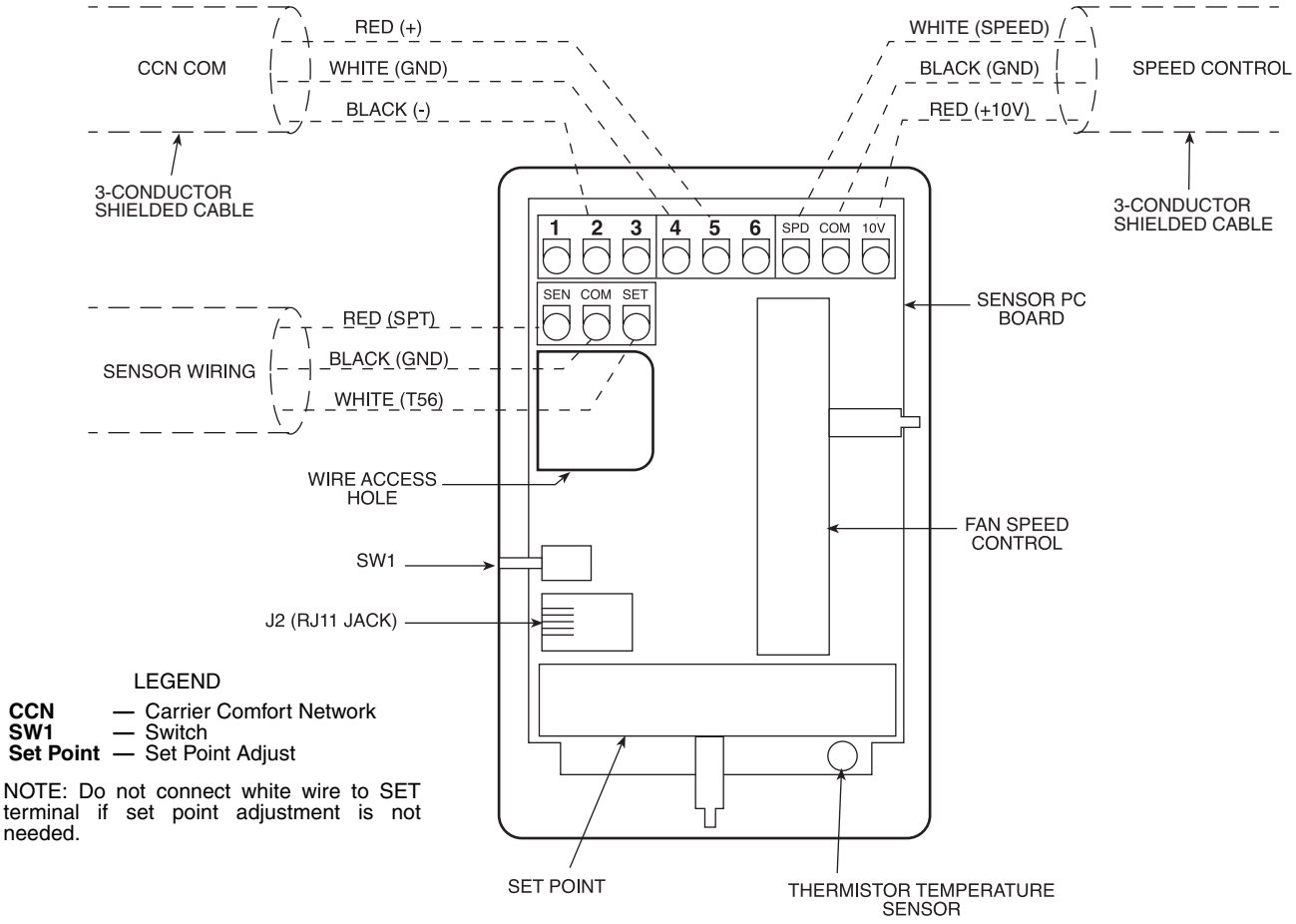

Fig. 18 — Fan Coil Thermostat Wiring (33ZCT57SPT)

→ Wiring the Space Temperature Sensor (33ZCT58SPT) — The T58 space temperature sensor is wired differently than other conventional sensors. The T58 sends all its sensor information through the CCN bus to the zone controller that it is associated with. The SPT sensor wiring connections are not used. The T58 sensor does not need to be directly wired to the zone controller.

The T58 sensor may be powered by a separate 24-VAC power supply or may be connected to the J1 24 VAC power terminals on the zone controller. Be sure that the polarity of the power supply connections are consistent. For multiple devices wired to the same power supply, all positive (+) and negative (–) terminals should be wired in the same polarity.

Wire the T58 sensor to the CCN. Connect the CCN + terminal to the RED signal wire (CCN+). Connect the CCN – terminal to the BLACK signal wire (CCN–). Connect the GND terminal to the WHITE/CLEAR signal wire (Ground). Refer to the T58 sensor Installation Instructions for more information on installing and wiring the sensor.

IMPORTANT: The T58 sensor must be configured with the bus address and device type of the zone controller before it will broadcast temperature to the zone controller. Refer to the T58 sensor Installation Instructions for more information on configuring the sensor.

SUPPLY AIR TEMPERATURE (SAT) SENSOR INSTALLATION — On fan coil units with heating or cooling, the SAT sensor is required. The SAT must be installed in the fan coil air outlet. The part number is 33ZCSENSAT.

The SAT sensor probe is 6 inches in length. The probe tip must not touch the fan coil. See Fig. 20.

For fan coil installations utilizing a supply-air grille the supply air temperature sensor should be fastened to the supply-air grille in a location which will provide the best sensing of the supply-air temperature during heating and cooling.

For fan coils using a ducted supply, the supply air temperature sensor should be located in the supply duct downstream of the discharge of the fan coil to allow good mixing of the supply airstream.

See Fig. 21 for mounting location.

⚠ WARNING

Disconnect electrical power before wiring the fan coil controller. Electrical shock, personal injury, or damage to the fan coil controller can result.

Do not run sensor or relay wires in the same conduit or raceway with Class 1 AC service wiring. Do not abrade, cut, or nick the outer jacket of the cable. Do not pull or draw cable with a force that may harm the physical or electrical properties. Avoid splices in any control wiring.

Perform the following steps to connect the SAT sensor to the fan coil controller:

1. Locate the opening in the control box. Pass the sensor probe through the hole.
2. Drill or punch a $^1/_2$-in. hole in the fan coil unit. See Fig. 22.
3. Use two field-supplied, self-drilling screws to secure the sensor probe to the fan coil unit.
4. Connect the sensor leads to the fan coil controller's wiring harness terminal board at the terminals labeled SAT (RED) and GND (BLK).

Wiring when distance between fan coil controller and space temperature sensor is 50 feet or less

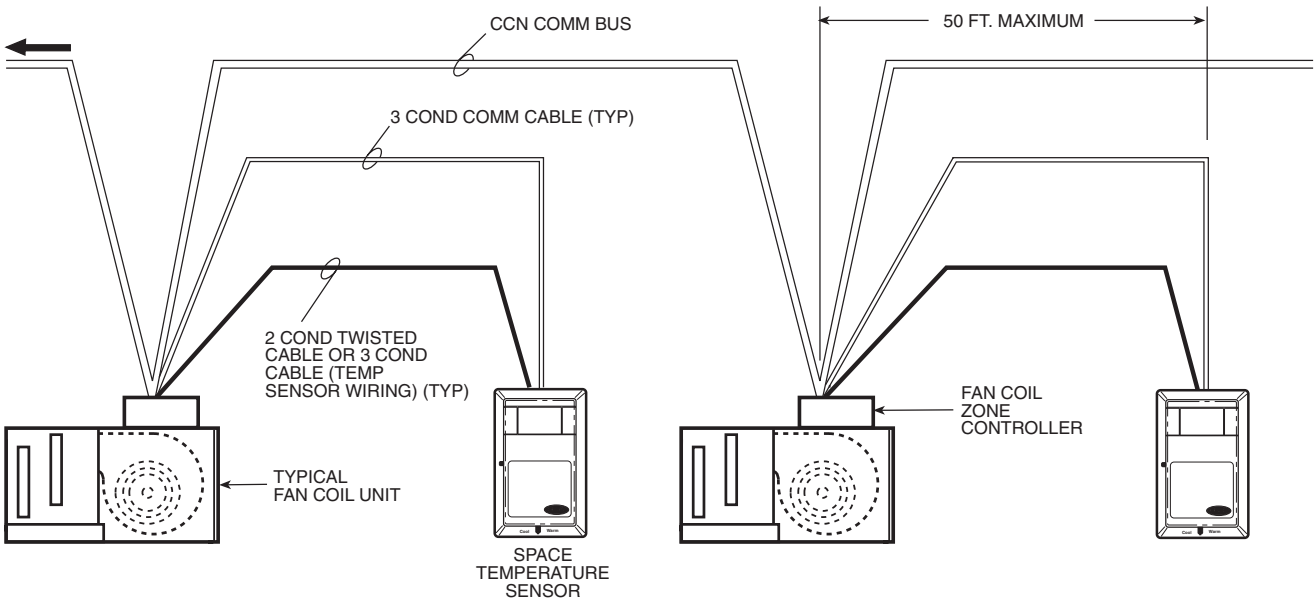

Wiring when distance between fan coil controller and space temperature sensor is greater than 50 feet

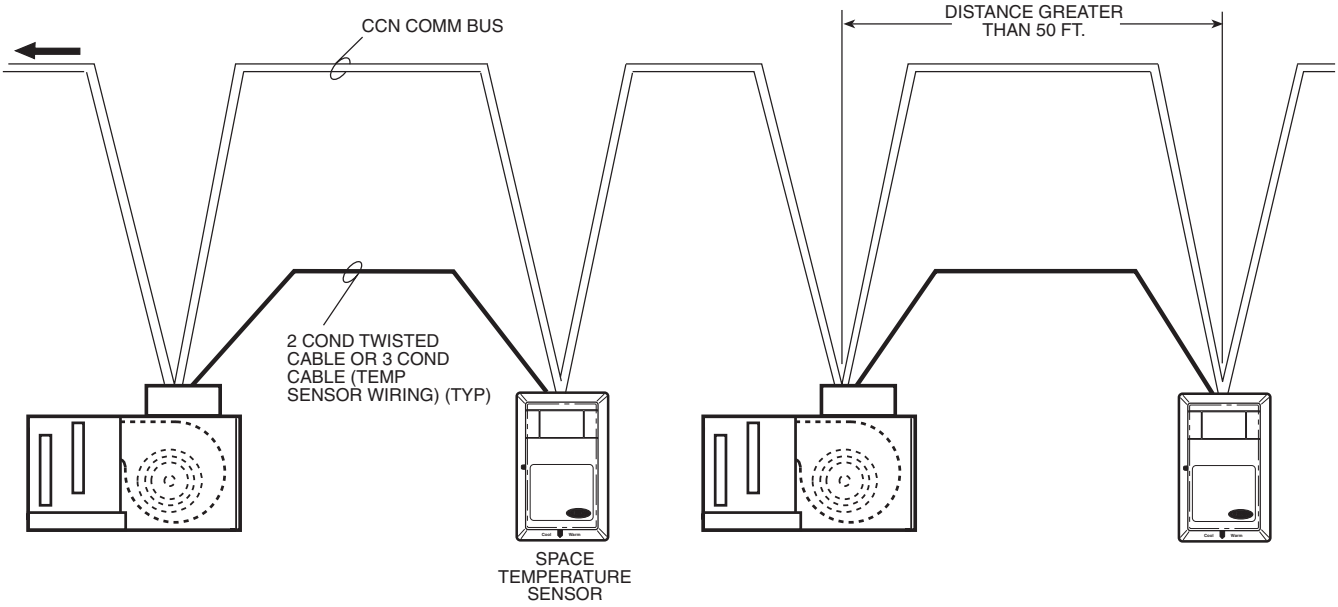

Fig. 19 — Communication Bus Wiring to Fan Coil Zone Controller

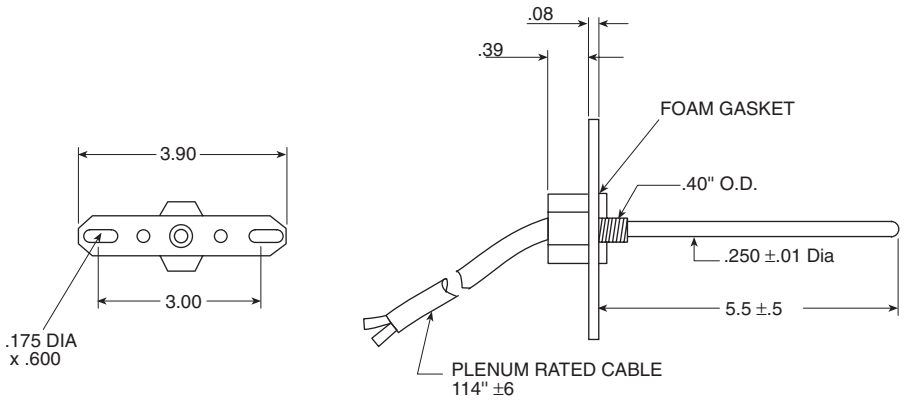

Fig. 20 — Supply Air Temperature Sensor (Part Number 33ZCSENSAT)

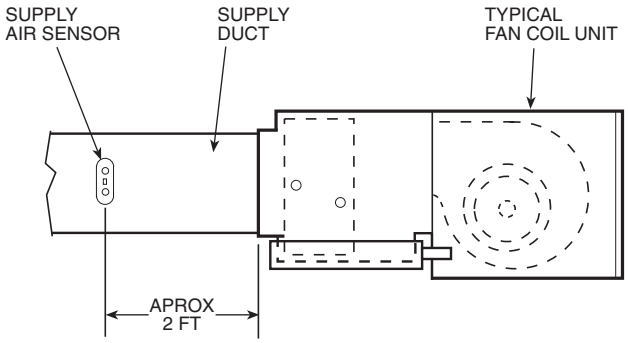

Fig. 21 — Supply Air Temperature Sensor Mounting Location

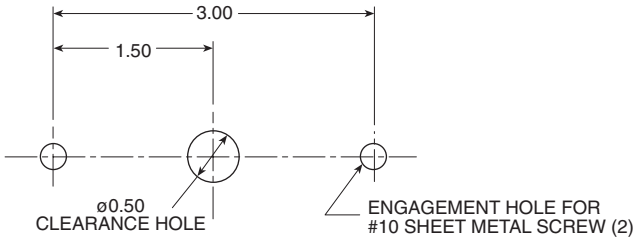

Fig. 22 — Supply Air Temperature Sensor Mounting

Perform the following steps if state or local code requires the use of conduit, or if your installation requires a cable length of more than 8 ft:

1. Secure the probe to the fan coil unit with two field-supplied self-drilling screws.
2. If you are extending cable length beyond 8 ft, use plenum rated, 20 AWG, twisted pair wire.
3. Connect the sensor leads to the fan coil controller's wiring harness terminal board at the terminals labeled SAT (RED) and GND (BLK).
4. Neatly bundle and secure excess wire.

INDOOR AIR QUALITY SENSOR INSTALLATION — The indoor air quality (IAQ) sensor accessory monitors carbon dioxide levels. This information is used to monitor IAQ levels. Three types of sensors are provided. The wall sensor can be used to monitor the conditioned air space. Sensors use infrared technology to measure the levels of CO_2 present in the air. The wall sensor is available with or without an LCD readout to display the CO_2 level in ppm. See Fig. 23.

Sensor accessory descriptions and part numbers are shown in Table 2. To mount the sensor, refer to the installation instructions shipped with the accessory kit.

Table 2 — CO_2 Sensor Accessories

CO_2 SENSOR ACCESSORY PART NUMBERS	DESCRIPTION
33ZCSENCO2	Wall Mount Sensor (with display)
33ZCT55CO2	Wall Mount Sensor with 33ZCT55SPT space temperature sensor (no display)
33ZCT56CO2	Wall Mount Sensor with 33ZCT56SPT space temperature sensor and set point adjustment (no display)

The CO_2 sensors listed in Table 2 are all factory set for a range of 0 to 2000 ppm and a linear voltage output of 0 to 10 vdc. Refer to the instructions supplied with the CO_2 sensor for electrical requirements and terminal locations.

To accurately monitor the quality of the air in the conditioned air space, locate the sensor near a return air grille (if present) so it senses the concentration of CO_2 leaving the space. The sensor should be mounted in a location to avoid direct breath contact.

Do not mount the IAQ sensor in drafty areas such as near supply ducts, open windows, fans, or over heat sources. Allow at least 3 ft between the sensor and any corner. Avoid mounting the sensor where it is influenced by the supply air; the sensor gives inaccurate readings if the supply air is blown directly onto the sensor or if the supply air does not have a chance to mix with the room air before it is drawn into the return air-stream.

Indoor Air Quality Sensor Wiring — To wire the sensors after they are mounted in the conditioned air space or outdoor location, see Fig. 24 and the instructions shipped with the sensors. For each sensor, use two 2-conductor 18 AWG twisted-pair cables (unshielded) to connect the separate isolated 24 vac power source to the sensor and to connect the sensor to the control board terminals. To connect the sensor to the control board, identify the positive (0-10 VDC) and ground (SIG COM) terminals on the sensor. Connect the 1-10 VDC terminal to terminal IAQ and connect the SIG COM terminal to terminal GND.

HUMIDITY SENSOR (WALL-MOUNTED) INSTALLATION — The accessory space humidity sensor is installed on an interior wall to measure the relative humidity of the air within the occupied space. See Fig. 25.

The use of a standard 2- x 4-in. electrical box to accommodate the wiring is recommended for installation. The sensor can be mounted directly on the wall, if acceptable by local codes.

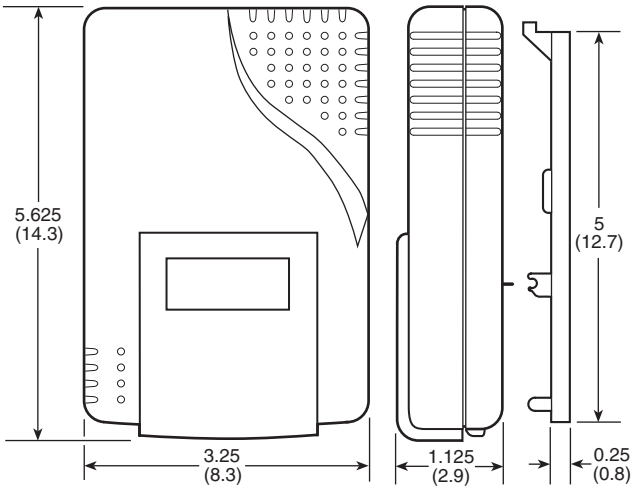

NOTE: Dimensions are in inches.
Dimensions in ( ) are in centimeters.

Fig. 23 — Indoor Air Quality (CO_2) Sensor (33ZCSENCO2)

If the sensor is installed directly on a wall surface, install the humidity sensor using 2 screws and 2 hollow wall anchors (field-supplied); *do not overtighten screws.* See Fig. 15.

⚠ CAUTION

Do NOT clean or touch the sensing element with chemical solvents; they can permanently damage the sensor.

The sensor must be mounted vertically on the wall. The Carrier logo should be oriented correctly when the sensor is properly mounted.

DO NOT mount the sensor in drafty areas such as near heating or air-conditioning ducts, open windows, fans, or over heat sources such as baseboard heaters, radiators, or wall-mounted light dimmers. Sensors mounted in those areas will produce inaccurate readings.

Avoid corner locations. Allow at least 4 ft between the sensor and any corner. Airflow near corners tends to be reduced, resulting in erratic sensor readings.

Sensor should be vertically mounted approximately 5 ft up from the floor, beside the space temperature sensor.

For distances up to 500 feet, use a 3-conductor, 18 or 20 AWG cable. A CCN communication cable can be used, although the shield is not required. The shield must be removed from the sensor end of the cable if this cable is used. See Fig. 26 for wiring details.

The power for the sensor is provided by the control board. The board provides 24 vdc for the sensor. No additional power source is required.

→ To wire the sensor, perform the following:

1. At the sensor, remove 4-in. of jacket from the cable. Strip $^1/_4$-in. of insulation from each conductor. Route the cable through the wire clearance opening in the center of the sensor.
2. Connect the RED wire to the sensor screw terminal marked (+).
3. Install one lead from the resistor (supplied with the sensor) and the WHITE wire, into the sensor screw terminal marked (–). After tightening the screw terminal, test the connection by pulling gently on the resistor lead.
4. Connect the remaining lead from the resistor to the BLACK wire and secure using a field-supplied closed end type crimp connector or wire nut.

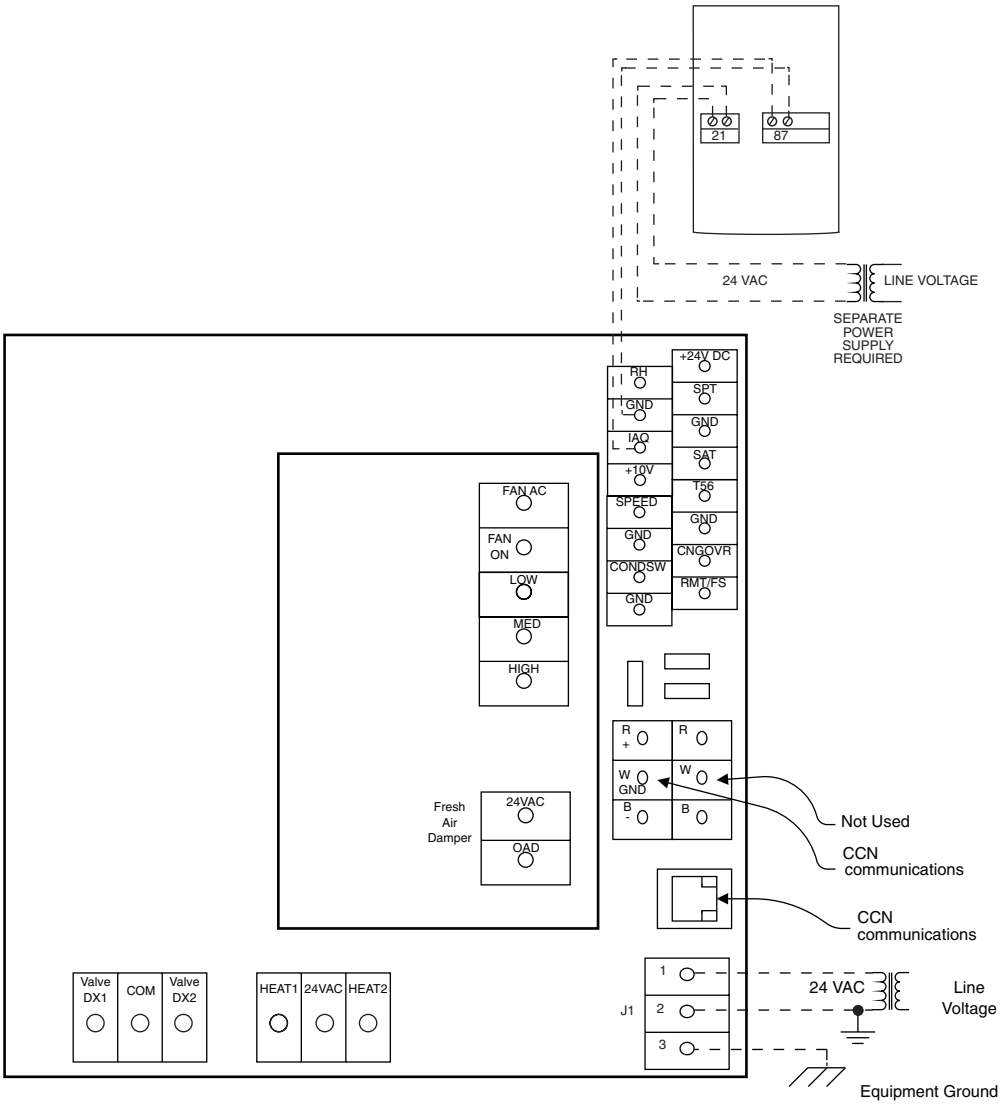

→ **Fig. 24 — IAQ Sensor Wiring**

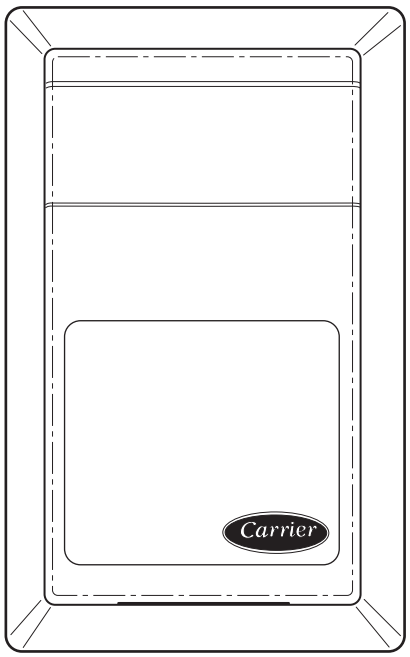

Fig. 25 — Wall Mounted Relative Humidity Sensor (P/N 33AMSENRHS000)

5. Using electrical tape, insulate any exposed resistor lead to prevent shorting.
6. At the control box, remove the jacket from the cable.
7. Strip $^1/_4$-in. of insulation from each conductor.
8. Connect the RED wire to terminal 24VDC on the control board.

   NOTE: The 24VDC terminal is used for RH sensor wiring only.
9. Connect the BLACK wire to terminal GND on the control board.
10. Connect the WHITE/CLEAR wire to terminal RH on the control board.
11. Connect shield to earth ground (if shielded wire is used).

Connect the Outputs — Wire the fan coil controller's outputs (fan, staged heat, valves) as shown in the applicable wiring diagrams in Fig. 4-10.

→ **Connect Accessories —** Refer to accessory installation instructions for installation procedures. Fan coil controller wiring is shown for the following accessories:

- Linkage Thermostat (Fig. 27)
- Condensate Pump Switch (Fig. 28)
- Fresh Air Damper (Fig. 29)
- Fan Status or Remote Occupancy (Fig. 30)
- Changeover Thermostat (Fig. 31)

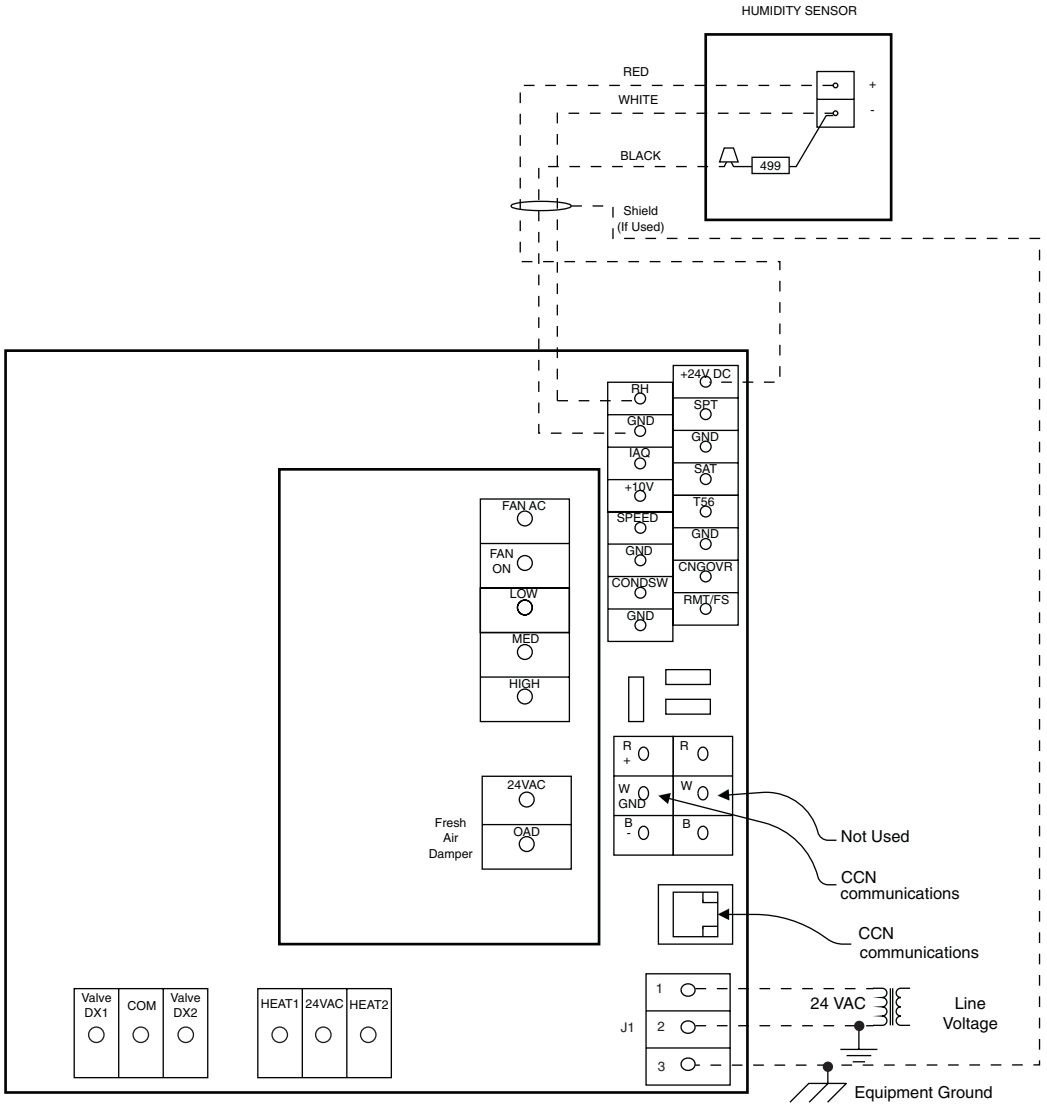

→ **Fig. 26 — Humidity Sensor Wiring**

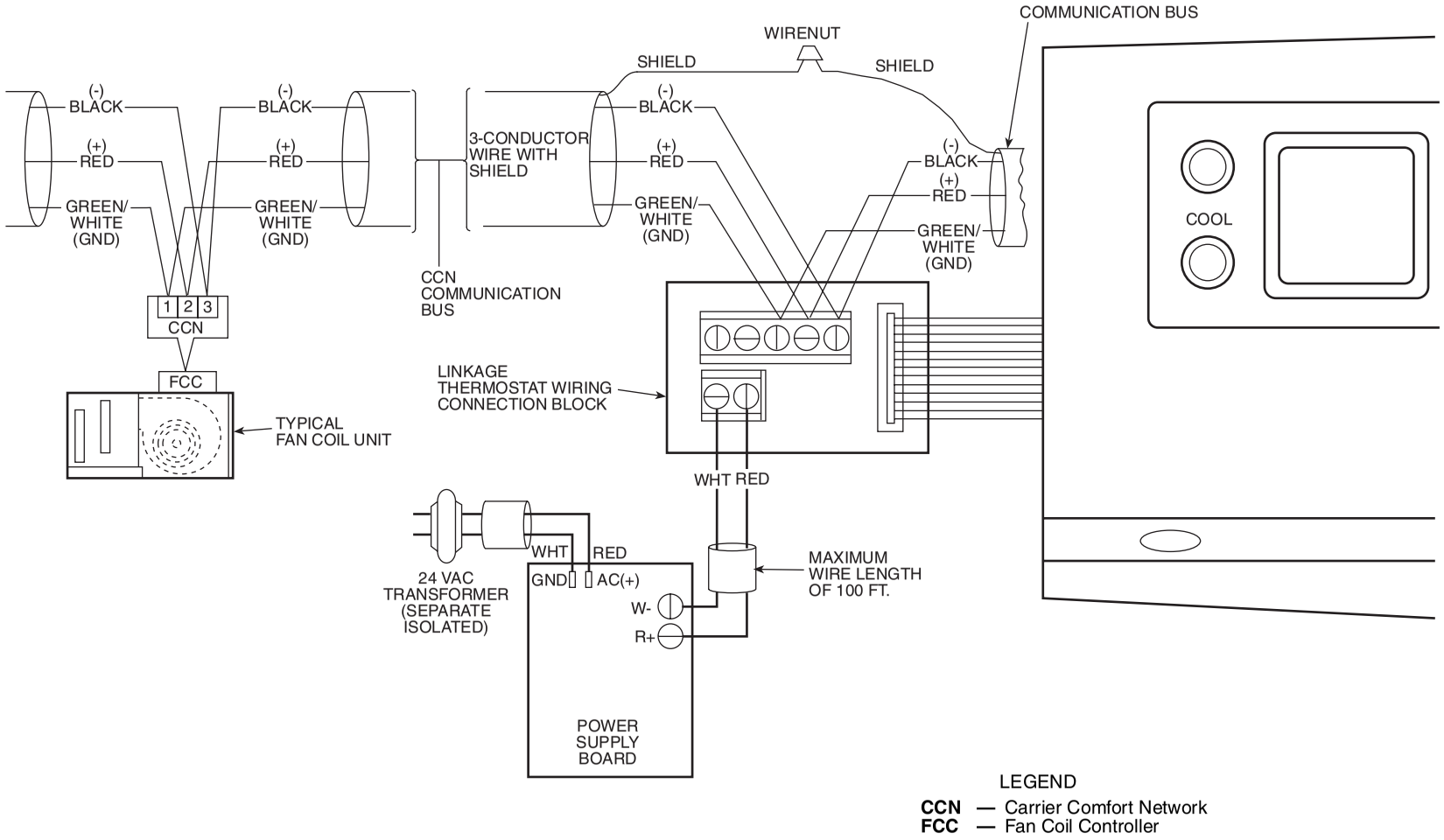

→Fig. 27 — Wiring Connections (Linkage Thermostat)

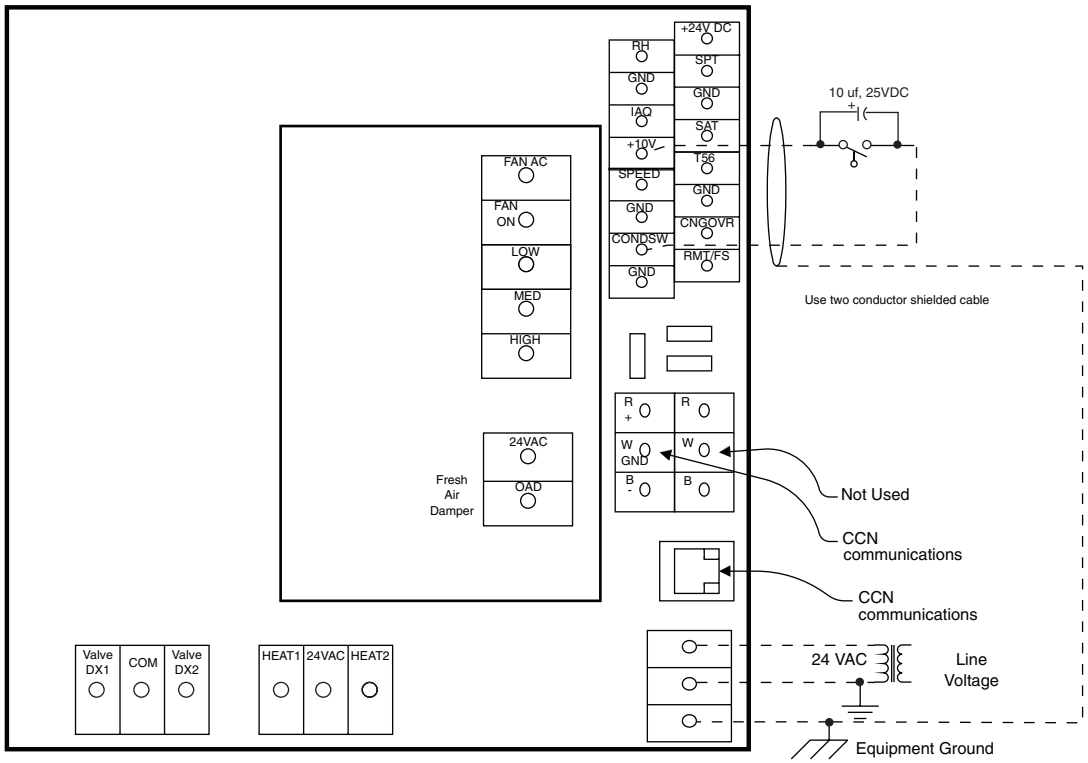

NOTE: To ensure that the switch operates reliably in a low voltage circuit, install a field-supplied 10 µf, 25 VDC capacitor across the switch contacts. Be sure to observe polarity.

→ **Fig. 28 — Condensate Pump Switch Wiring**

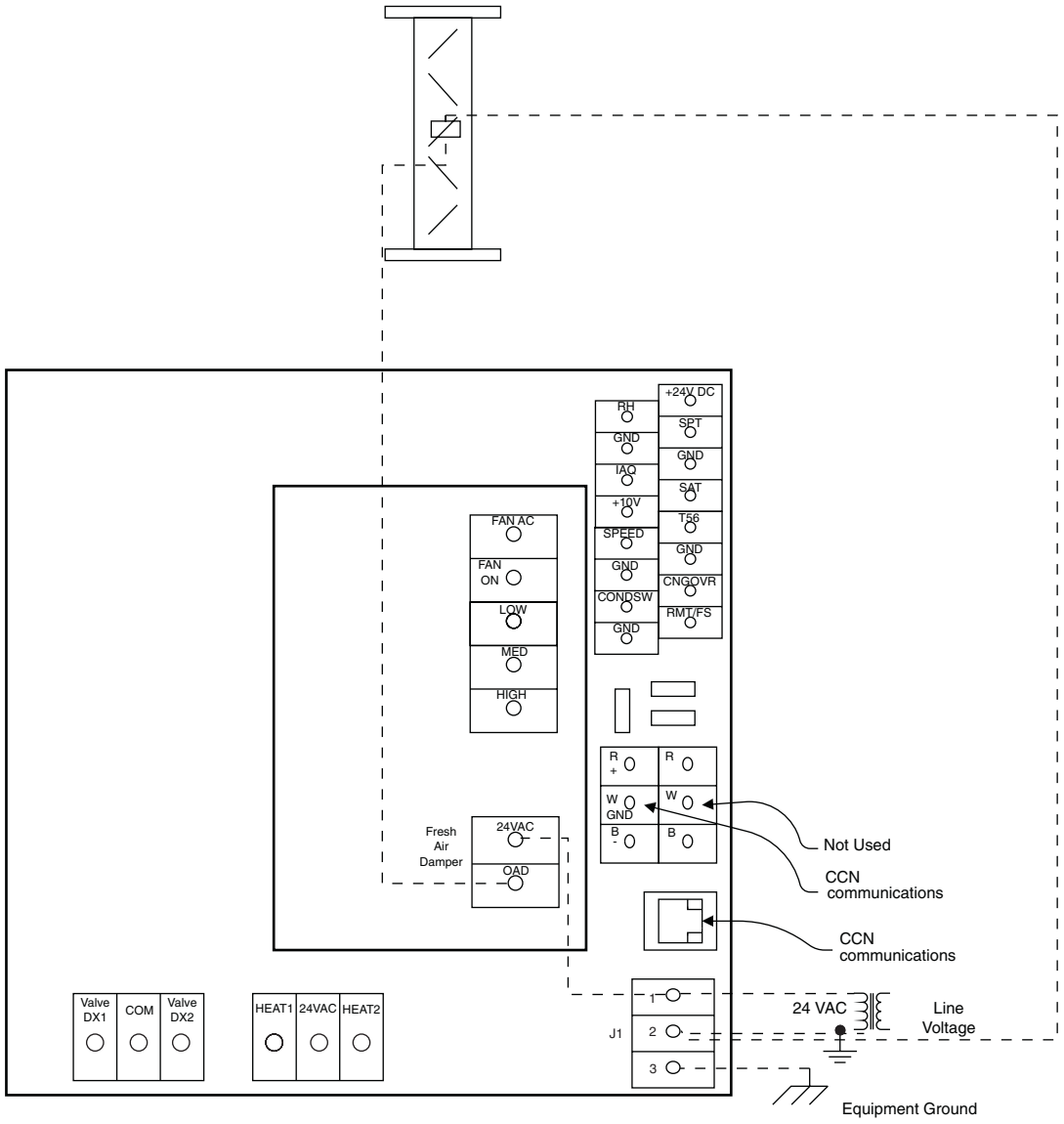

→ **Fig. 29 — Fresh Air Damper Wiring**

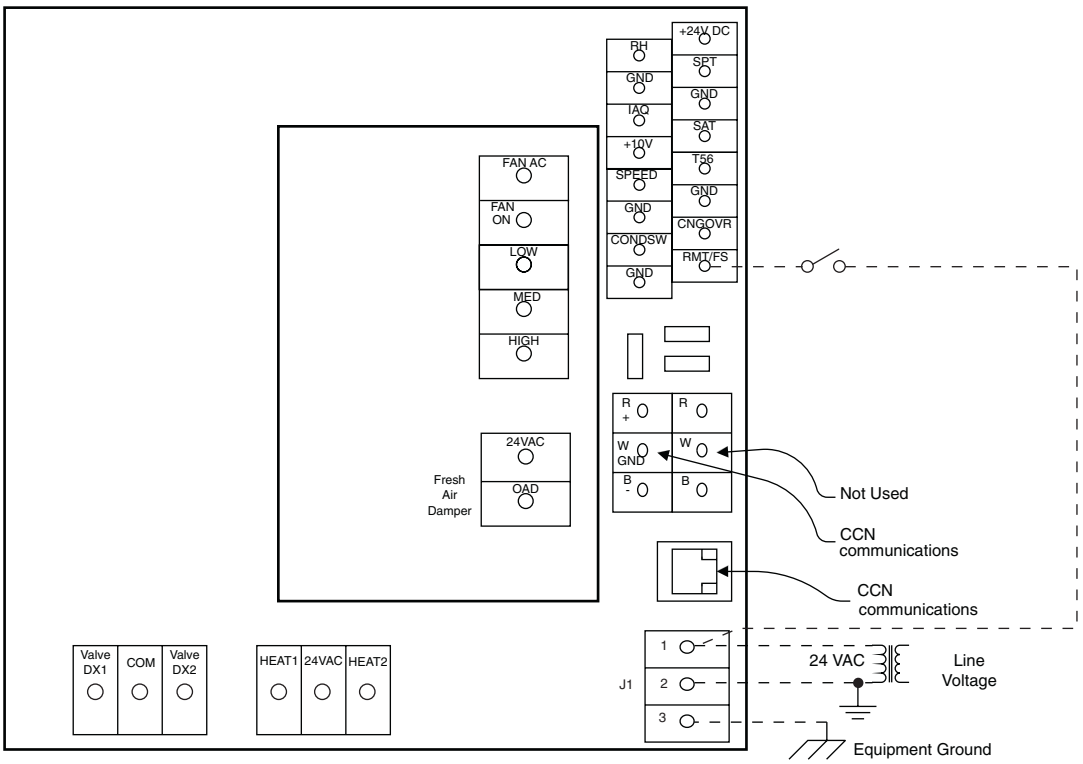

→ **Fig. 30 — Remote Occupancy or Fan Status Wiring**

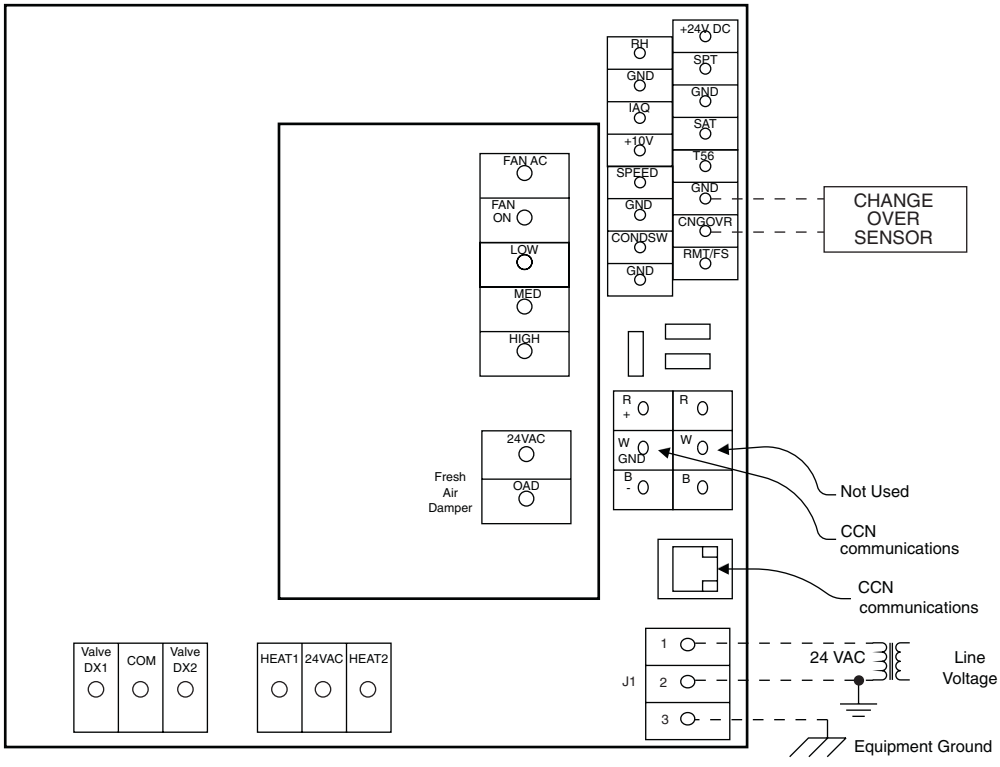

→ **Fig. 31 — Changeover Sensor Wiring**

Connect the CCN Communication Bus — The fan coil controllers connect to the bus in a daisy chain arrangement. The fan coil controller may be installed on a primary CCN bus or on a secondary bus from the primary CCN bus. Connecting to a secondary bus is recommended.

At any baud (9600, 19200, 38400 baud), the number of controllers is limited to 239 zones maximum. When Carrier linkage thermostats are used on the same bus as fan coil units, no more than 128 fan coils and 12 linkage thermostats may be on the same bus. Bus length may not exceed 4000 ft, with no more than 60 total devices on any 1000-ft section. Optically isolated RS-485 repeaters are required every 1000 ft.

NOTE: Carrier thermostats operate at 9600 band.

The first fan coil controller in a network connects directly to the bridge and the others are wired sequentially in a daisy chain fashion. Refer to Fig. 32 for an illustration of CCN Communication Bus wiring.

The CCN Communication Bus may also connect to the fan coil controller space temperature sensor. Refer to the Install Sensors section for sensor wiring instructions.

COMMUNICATION BUS WIRE SPECIFICATIONS — The Carrier Comfort Network (CCN) Communication Bus wiring is field-supplied and field-installed. It consists of shielded three-conductor cable with drain (ground) wire. The cable selected must be identical to the CCN Communication Bus wire used for the entire network. See Table 3 for recommended cable.

Table 3 — Recommended Cables

MANUFACTURER	CABLE PART NO.
Alpha	2413 or 5463
American	A22503
Belden	8772
Columbia	02525

NOTE: Conductors and drain wire must be at least 20 AWG (American Wire Gage), stranded, and tinned copper. Individual conductors must be insulated with PVC, PVC/nylon, vinyl, Teflon, or polyethylene. An aluminum/polyester 100% foil shield and an outer jacket of PVC, PVC/nylon, chrome vinyl, or Teflon with a minimum operating temperature range of –20 C to 60 C is required.

CONNECTION TO THE COMMUNICATION BUS

1. Strip the ends of the red, white, and black conductors of the communication bus cable.
2. Connect one end of the communication bus cable to the bridge communication port labeled COMM2 (if connecting on a secondary bus).

   When connecting the communication bus cable, a color code system for the entire network is recommended to simplify installation and checkout. See Table 4 for the recommended color code.

Table 4 — Color Code Recommendations

SIGNAL TYPE	CCN BUS WIRE COLOR	PLUG PIN NUMBER
+	Red	1
Ground	White	2
–	Black	3

3. Connect the other end of the communication bus cable to the terminal block labeled CCN in the fan coil controller of the first air terminal. Following the color code in Table 4, connect the Red (+) wire to Terminal 1. Connect the White (ground) wire to Terminal 2. Connect the Black (–) wire to Terminal 3.
4. Connect additional fan coil controllers in a daisy chain fashion, following the color coded wiring scheme in Table 4. Refer to Fig. 32.

NOTE: The communication bus drain wires (shield) must be tied together at each fan coil controller. If the communication bus is entirely within one building, the resulting continuous shield must be connected to ground at only one single point. If the communication bus cable exits from one building and enters another building, connect the shields to ground at a lightning suppressor in each building where the cable enters or exits (one point only).

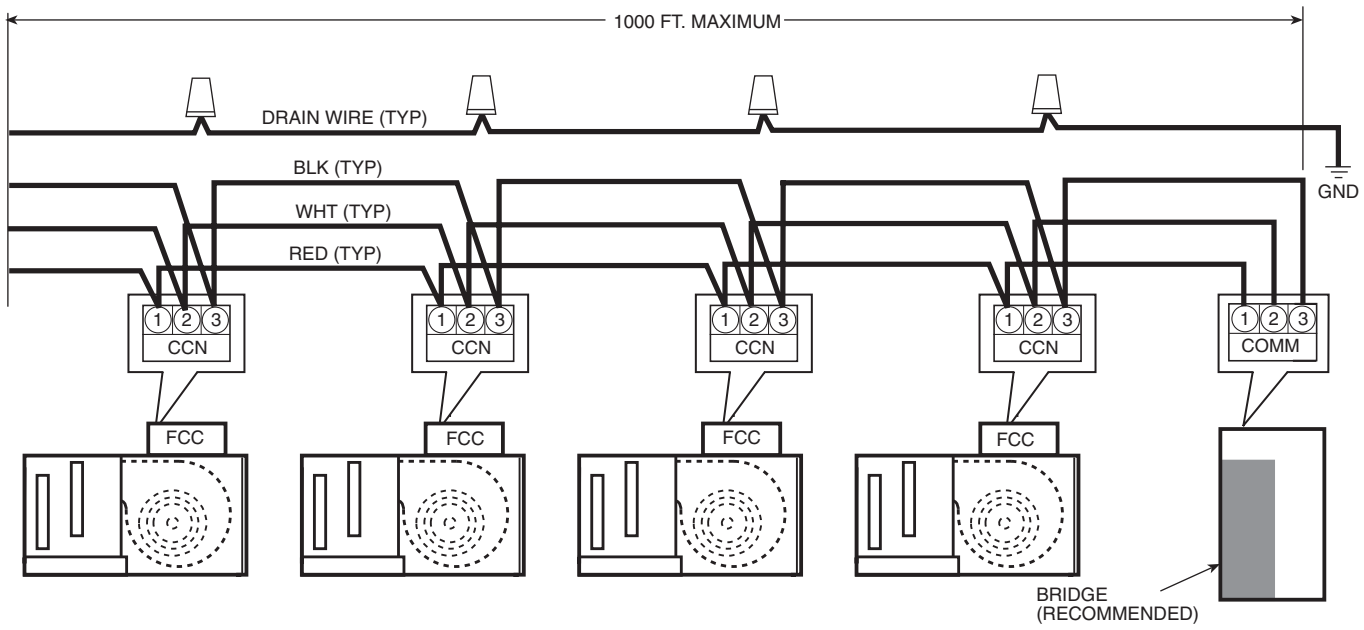

LEGEND

CCN — Carrier Comfort Network
FCC — Fan Coil Controller

Fig. 32 — Communication Bus Wiring

START-UP

Use the Carrier network communication software to start up and configure the fan coil controller.

All set-up and set point configurations are factory-set and field-adjustable.

Changes can be made using the ComfortWORKS® software, ComfortVIEW™ software, or Network Service Tool. The Network Service Tool is a portable interface device that allows the user to change system set-up and set points from a zone sensor or terminal control module. During start-up, the Carrier software can also be used to verify communication with each fan coil controller.

For specific operating instructions, refer to the literature provided with the software.

Perform System Check-Out

1. Check correctness and tightness of all power and communication connections.
2. At the fan coil, check fan and system controls for proper operation.
3. At the fan coil, check electrical system and connections of any optional electric reheat coil. If hot water reheat is used, check piping and valves against job drawings.
4. Check to be sure the area around the fan coil is clear of construction dirt and debris.
5. Check that final filters are installed in the fan coil. Dust and debris can adversely affect system operation.
6. Verify that the fan coil controller controls are properly connected to the CCN bus.

Initial Operation and Test — Perform the following procedure:

1. Apply 24 vac power to the control.
2. Connect the service tool to the phone jack service port of the controller.
3. Using the service tool, upload the controller from address 0,1. The address may be set at this time. Make sure that Service Tool is connected to this fan coil unit only when changing the address.

Fan, Heat, and Cool Configuration and Test — Perform the following procedure to configure and test the fan, cool, and heat:

1. Display the Fan Coil Service Configuration screen to make sure the proper Cool Type, Heat Type, fan speeds, and other options are configured. See the Configuration section to answer questions about the individual configurations.
2. Display the Points Display table. In most cases, the fan will start up in low speed due to the default settings. If the fan did not come on, forcing the fan output to ON using the Points Display table will cause the fan to run at low speed. Check to make sure the fan is running.
3. With the fan running at low speed, bring up the Fan Coil Maintenance screen. Two points are available to change fan speed to Medium or High. Change the speeds by forcing the point. Make sure the fan runs at the correct speeds. Change the points back to AUTO after completing the test.
4. Heating and cooling operation can be tested with the fan running in the occupied mode by forcing the space temperature point. Force the point to a value 2 degrees above the cooling set point to test cooling and 2 degrees below the heating set point to test heating.
5. If the fan coil is on a two-pipe system, operation of the valve for both modes can be tested by forcing the value of the changeover sensor to above 80 F. When forced above 80 F, the changeover mode will change to heat. (If the value of the changeover mode was already heat, this is not necessary.) When forced below 65 F, the changeover mode will change to cool.

CONFIGURATION

The following sections describe the computer configuration screens which are used to configure the fan coil controller. The screens shown may be displayed differently when using different Carrier software.

Points Display Table — The Points Display table is used to monitor and change the fan coil controller set points. See Fig. 33.

DESIRED MODE — The Desired Mode is determined by the fan coil controller and can use information from a Linkage Thermostat or its local occupancy space conditions and set points.

Desired Mode:	Display Units	ASCII
	Default Value	FAN ONLY
	Display Range	OFF, OCC COOL, OCC HEAT, FAN ONLY, UNOCCOOL, UNOCHEAT, DEHUMID
	Network Access	Read Only

EQUIPMENT STATUS — The Equipment Status point provides a single point display on the main status screen of all alarm conditions. If any conditions monitored in the zone controller indicate an alarm condition, the value of this point will change from normal to alarm.

Equipment Status:	Display Units	ASCII
	Default Value	ALARM
	Display Range	ALARM, NORMAL
	Network Access	Read Only

→ CONTROLLING SET POINT — Controlling Set Point will display either the heating master reference or the cooling master reference depending upon what mode the fan coil is in. The display will default to the heating master reference and will display the last controlling master reference when in neither heating nor cooling.

Controlling Set Point:	Display Units	degrees F (degrees C)
	Default Value	–40.0
	Display Range	–40.0 to 245.0
	Network Access	Read Only

CONTROLLING TEMPERATURE — The Controlling Temperature point displays the temperature of the device currently being used by the fan coil controller to control heating and cooling outputs. This value could come from a Linkage Thermostat or a temperature sensor located in the conditioned space.

Controlling Temperature:	Display Units	degrees F (degrees C)
	Default Value	–40.0
	Display Range	–40.0 to 245.0
	Network Access	Read/Write

SPACE TEMPERATURE — This point displays the space temperature from the 10K thermistor located in the space.

Space Temperature:	Display Units	degrees F (degrees C)
	Default Value	–40.0
	Display Range	–40.0 to 245.0
	Network Access	Read/Write

SUPPLY AIR TEMPERATURE — The Supply Air Temperature point displays the temperature of the air leaving the Fan Coil, downstream of any cool or heat sources. Temperature is measured by a 10K thermistor. This sensor is required for proper function of the heat and cool algorithms.

Supply Air Temperature:		
	Display Units	degrees F (degrees C)
	Default Value	0.0
	Display Range	–40.0 to 245.0
	Network Access	Read/Write

FAN MODE — The Fan Mode point displays the status of the fan mode control.

Fan Mode:		
	Display Units	ASCII
	Default Value	LOW
	Display Range	OFF, ON, LOW, MEDIUM, HIGH
	Network Access	Read Only

COOLING CAPACITY — When cooling is enabled, the percent of cooling being delivered is determined by the following formula for modulating (floating point) type heat:

% Output Capacity = ((SPT - SAT) / (SPT - 50 F)) * 100.

The percent of cooling delivered is determined by the following for two-position hot water or staged electric heat:

% Output Capacity = (# of active stages / Total stages) * 100.

The Cooling Capacity point is used to display the current Cooling Capacity.

Cooling Capacity:		
	Display Units	% output capacity
	Default Value	0
	Display Range	0 to 100
	Network Access	Read Only

HEATING CAPACITY — When heat is enabled, the percent of heat being delivered is determined by the following formula for modulating (floating point) type heat:

% Output Capacity = ((SAT - SPT) / (140 F - SPT)) * 100

The percent of heat delivered is determined by the following for two-position hot water or staged electric heat:

% Output Capacity = (# of active stages / Total stages) * 100

The Heating Capacity point is used to display the current Heating Capacity.

Heating Capacity:		
	Display Units	% output capacity
	Default Value	0
	Display Range	0 to 100
	Network Access	Read Only

FILTER STATUS — The filter status point will be shown as "CLEAN" until the run time of the fan exceeds the configured Filter Timer Hours. When the user-configured Filter Timer Hours has been exceeded, the Filter Status will display "DIRTY" and a CCN alarm will be generated. Forcing the point to "NORMAL" will clear the alarm condition and will reset the timer. The value of the timer is stored in EEPROM to protect it in the event of a power failure. This is done periodically every 24 hours. The filter timer function only operates if the configured filter timer value (FLTTMR) is a non-zero number.

Filter Status:		
	Display Units	Discrete ASCII
	Default Value	Clean
	Display Range	Clean/Dirty
	Network Access	Read/Write

CHANGEOVER MODE — The Changeover mode indicates the allowable operating mode for two pipe heating/cooling fan coil units. This point will display and follow the value of the Changeover Status after a 5-minute delay. Upon a transition of the Changeover Status, the fan coil controller will terminate the previously active mode. This allows the water valve to close if it was open. The Changeover Mode point will echo the value of the Changeover Status point after the termination is complete. This point is NOT forcible (refer to the Changeover Status point in the maintenance table).

Changeover Mode:		
	Display Units	Discrete ASCII
	Default Value	Heat
	Display Range	Heat/Cool
	Network Access	Read Only

CONDENSATE PUMP — The Condensate Pump point is used to monitor the input from a condensate pump overflow switch. The Fan Coil controller will generate a CCN alarm message when this input is on longer than a user-configured time. The zone controller will generate a return to normal message if the status of this point is off for more than 60 seconds.

When a condensate alarm is generated, all mechanical cooling will immediately stop to prevent further condensate accumulation, regardless of whether the space temperature set point has been satisfied. The condensate overflow alarm will have no affect on the fan speed control. Mechanical cooling will resume normal operation after the condensate alarm has returned to normal.

Condensate Pump:		
	Display Units	Discrete ASCII
	Default Value	Off
	Display Range	Off/On
	Network Access	Read/Write

→ REMOTE START — The Remote Start point is the status of the remote occupancy input. When the Remote Start point is on, and the fan coil is not controlled by a Linkage Thermostat, the fan coil will function in an occupied mode. When the Remote Start point is off, the fan coil will revert to its own occupancy schedule.

Remote Start:		
	Display Units	Discrete ASCII
	Default Value	Off
	Display Range	Off/On
	Network Access	Read/Write

→ SUPPLY FAN STATUS — Supply Fan Status will display the supply fan status when a supply fan status sensing device has been installed and configured.

Supply Fan Status:		
	Display Units	Discrete ASCII
	Default Value	No
	Display Range	No/Yes
	Network Access	Read/Write

AIR QUALITY — The Air Quality point displays the indoor air quality reading from a CO_2 sensor (or other type of air quality sensor) installed in the space. The CO_2 sensor is for monitoring and alarm purposes only. The Fan Coil controller can be configured to generate an alarm when the zone controller is in the occupied mode and the CO_2 level exceeds the high or low limit.

Air Quality (ppm):		
	Display units	None shown (parts per million implied)
	Default Value	0
	Display Range	0 to 5000
	Network Access	Read/Write

Description	Value	Units	Status	Force	Name	Notes
Desired Mode	Fan Only				MODE	
Equipment Status	Alarm				ALARM	
Controlling Set Point	**70.0**	dF			CSPT	
Controlling Temperature	**72.0**	dF			SPT	
Space Temperature	**72.0**	dF			RAT	
Supply Air Temperature	**68.2**	dF			SAT	
Fan Mode	Low				FANSTAT	
Cooling Capacity	0.0	%			CCAP	
Heating Capacity	0.0	%			HCAP	
Filter Status	**Clean**				FLTSTAT	
Changeover Mode	Heat				CHGMODE	
Condensate Pump	**Off**				CON_PUMP	
Remote Start	**Off**				REMOTE	
Supply Fan Status	**On**				SFS	
Air Quality (PPM)	**0.0**				AQ	
Relative Humidity	**0.0**	%RH			RH	
Outdoor Air Temperature	**0.0**	dF			OAT	
Valve/DX1	**Off**				CCV1	
Valve/DX2	**Off**				CCV2	
Heating 1	**Off**				HCV1	
Heating 2	**Off**				HCV2	
Damper Output	**Close**				DAMPER	
Fan Output	**On**				FAN	

→ **Fig. 33 — Points Display Table**

RELATIVE HUMIDITY — The Relative Humidity point is the space relative humidity reading from an optional space relative humidity sensor. A high humidity override function will cause the zone controller to provide full cooling if the Space Relative Humidity (RH) is above the current High Humidity Limit. During the humidity override, the 50 F minimum supply air temperature limit is maintained for DX type cooling. The Space Temperature must be above the current heating set point. If the zone controller is configured as a 2-pipe Changeover System, then the Changeover Mode must be Cooling.

Relative Humidity:	Display Units	% RH
	Default Value	0
	Display Range	0 to 100
	Network Access	Read/Write

OUTDOOR AIR TEMPERATURE — The Outdoor Air Temperature point is included to display the temperature of the outdoor air. This value must be broadcast by another device on the CCN network. If this point is receiving a valid broadcast value less than the DX cooling lockout value configured, then DX cooling will be locked out.

Outdoor Air Temperature:	Display Units	degrees F (degrees C)
	Default Value	0.0
	Display Range	–40.0 to 245.0
	Network Access	Read/Write

VALVE/DX1 — The Valve/DX1 point provides the state of the Valve/DX1 triac (valve open for modulating cooling).

Valve/DX1:	Display Units	Discrete ASCII
	Default Value	Off
	Display Range	Off/On
	Network Access	Read/Write (see note)

NOTE: Force both cooling or heating outputs off prior to forcing either input on. Then force only one heating or cooling output on at a time.

VALVE/DX2 — The Valve/DX2 point provides the state of the Valve/DX2 triac (valve close for modulating cooling).

Valve/DX2	Display Units	Discrete ASCII
	Default Value	Off
	Display Range	Off/On
	Network Access	Read/Write (see note)

NOTE: Force both cooling or heating outputs off prior to forcing either input on. Then force only one heating or cooling output on at a time.

HEATING 1 — The Heating 1 point provides the state of the Heating 1 triac (valve open for modulating heating).

Heating 1:	Display Units	Discrete ASCII
	Default Value	Off
	Display Range	Off/On
	Network Access	Read/Write (see note)

NOTE: Force both cooling or heating outputs off prior to forcing either input on. Then force only one heating or cooling output on at a time.

HEATING 2 — The Heating 2 point provides the state of the Heating 2 triac (valve close for modulating heating).

Heating 2:	Display Units	Discrete ASCII
	Default Value	Off
	Display Range	Off/On
	Network Access	Read/Write (see note)

NOTE: Force both cooling or heating outputs off prior to forcing either input on. Then force only one heating or cooling output on at a time.

DAMPER OUTPUT — The Damper Output point provides the state of the fresh air damper relay. If the fan is OFF, or the occupancy status is Unoccupied or Biased Occupied, the damper is closed. Otherwise, if the fan is ON and the occupancy status is occupied, the damper is open.

Damper Output:	Display Units	Discrete ASCII
	Default Value	Close
	Display Range	Close/Open
	Network Access	Read/Write

FAN OUTPUT — During occupied periods, the fan operation is determined by the Occupied Fan Operation configuration decision. If this decision is set to continuous (1), the fan will operate continuously during the occupied periods and during heating, cooling, and dehumidification during unoccupied periods. If it is set to automatic (0), the fan will only operate only if heating, cooling or dehumidification is required (and heating or cooling is available in a 2-pipe changeover system). The Fan Output point displays the status of the fan.

During unoccupied periods, the fan will only operate if at least one of the following conditions is true:

- the Space Temperature exceeds the Cooling Set Point and Cooling is available
- Space Temperature falls below the Heating Set Point and Heating is available
- Space Humidity exceeds the Unoccupied High Humidity limit and the Space Temperature is above the Heating set point
- Space Humidity exceeds the Unoccupied High Humidity limit, the Space Temperature is below the Heating set point, the Heat Type is not None, and the unit is not configured for 2-pipe Changeover (0)
- the control is configured for Unoccupied Fan Cycling and the current minute is equal to the calculated 1-minute time interval.

The fan stops at the end of the occupied time if the above conditions are satisfied. A 5-minute fan off delay will continue to provide fan operation after a cooling cycle is completed and under conditions where the fan would otherwise stop. This function improves IAQ by evaporating residual coil moisture (condensate) which contributes to bacteria growth.

The fan coil controller Unoccupied Fan Cycling option, when enabled, causes the fan to run for one minute each hour during unoccupied times. The exact time of operation is determined by the CCN address. The purpose of this mode is to prevent air stagnation from causing the unit to operate or not operate based upon improperly sensing the space temperature conditions.

Whenever a fan speed change is required, the zone controller will disable the fan output (for approximately 1 second) prior to changing the fan speed relays (FANSPD 1 and FANSPD 2). This will allow the speed relays to be switched under a no-load condition and will also prevent excessive EMI from being generated if the speed is being reduced. Once the fan speed relays are correctly positioned, the fan relay will be re-energized.

Following the execution of the initialization routine, the Fan Coil will delay an amount of time (in seconds) equal to the remainder of the Level II address divided by 60, before turning the fan on. This will allow for sequenced start-ups when more than one Fan Coil is connected to the network.

Fan Output:	Display Units	Discrete ASCII
	Default Value	Off
	Display Range	Off/On
	Network Access	Read/Write

Alarm Service Configuration Table — The Alarm Service Configuration Table is used to configure the alarms used on the fan coil controller. See Fig. 34.

ALARM ROUTING CONTROL — The Alarm Routing Control decision indicates which CCN system software or devices will receive and process alarms sent by the Fan Coil controller. This decision consists of eight digits which can be set to zero or one. A setting of one indicates alarms should be sent to this device. A setting of zero disables alarm processing for that device. Currently the corresponding digits are configured for the following devices: first digit - user interface software (ComfortWORKS®, ComfortVIEW™, etc.); second digit - Autodial Gateway or Telink; fourth digit - Alarm Printer Interface Module, DataLINK module; digits 3 and 5 through 8 - unused.

Alarm Routing Control:	Range	00000000 to 1111111
	Default Value	11010000

RE-ALARM TIME — This decision is used to configure the number of minutes the fan coil controller will wait before an alarm condition (which still exists) will be transmitted on the communications network again. Re-alarming of an alarm condition will continue until the condition no longer exists.

Re-Alarm Time:	Units	Minutes
	Range	0 to 1440
	Default Value	0 (Disabled)

CONTROL TEMPERATURE HYSTERESIS — This configuration defines the range above the high set point and below the low set point the space temperature must exceed for an alarm condition to exist during occupied hours.

Control Temperature Hysteresis:	Units	delta F (delta C)
	Range	1.0 to 20.0
	Default Value	5

SUPPLY AIR TEMPERATURE — The Supply Air Temperature High and Low Limit alarms are used to monitor the supply air temperature. If the temperature becomes too low or too high, an alarm condition will exist.

Supply Air Temperature Low Limit:	Units	degrees F (degrees C)
	Range	–40.0 to 245.0
	Default Value	45.0
Supply Air Temperature High Limit:	Units	degrees F (degrees C)
	Range	–40.0 to 245.0
	Default Value	150

OCCUPIED RELATIVE HUMIDITY — The Occupied Relative Humidity alarm defines the allowable humidity levels during occupied periods. If the humidity becomes too low or too high, an alarm condition will exist.

Occupied Relative Humidity Low Limit:	Units	% RH
	Range	0 to 100
	Default Value	30
Occupied Relative Humidity High Limit	Units	% RH
	Range	0 to 100
	Default Value	70

UNOCCUPIED RELATIVE HUMIDITY — The Unoccupied Relative Humidity alarm defines the allowable humidity levels during unoccupied periods. If the humidity becomes too low or too high, an alarm condition will exist.

Unoccupied Relative Humidity Low Limit:	Units	% RH
	Range	0 to 100
	Default Value	10
Unoccupied Relative Humidity High Limit:	Units	% RH
	Range	0 to 100
	Default Value	90

Description	Value	Units	Name	Notes
Alarm Control				
Alarm Routing Control	11010000		ALRMCNT	
Realarm Time	0	min	REALARM	
Control Temp Hysteresis	5.0	^F	SPTHYS	
Supply Air Temperature				
Low Limit	45.0	dF	LOWLIM	
High Limit	150.0	dF	HIGHLIM	
Occupied RH				
Low Limit	30.0	%RH	LOWLIM	
High Limit	70.0	%RH	HIGHLIM	
Unoccupied RH				
Low Limit	10.0	%RH	LOWLIM	
High Limit	90.0	%RH	HIGHLIM	
Air Quality				
Low Limit	0.0		LOWLIM	
High Limit	1200.0		HIGHLIM	

Fig. 34 — Alarm Service Configuration Table

INDOOR AIR QUALITY — The Indoor Air Quality alarm defines the allowable CO_2 levels during occupied periods. If the CO_2 levels become too low or too high during occupied periods, an alarm condition will exist.

Indoor Air Quality Low Limit:	Units	PPM (implied, not shown)
	Range	0.0 to 5000.0
	Default Value	0.0
Indoor Air Quality High Limit	Units	PPM (implied, not shown)
	Range	0.0 to 5000.0
	Default Value	800.0

Controller Identification Screen — The fan coil controller identification screen contains reference information used to identify the zone controller. See Fig. 35.

DESCRIPTION — The Description point displays the type of device (fan coil controller).

LOCATION — The Location point shows the location of the fan coil controller.

SOFTWARE PART NUMBER — The Software Part Number indicates the part number of the software being used.

MODEL NUMBER — The Model Number indicates the model number of the fan coil being used.

SERIAL NUMBER — The Serial Number indicates the serial number of the fan coil being used.

REFERENCE NUMBER — The Reference Number indicates the version of the software being used.

Holiday Configuration Screen — The Holiday Configuration screen is used by the fan coil controller to store configuration fields for up to twelve holidays. See. Fig. 36.

START MONTH — The Start Month field is used to configure the month that the holiday will start. The numbers 1 through 12 are used to indicate which month is specified.

Start Month:	Range	1 to 12
	Default Value	1 (January)

START DAY — The Start Day field is used to determine which day the holiday will start.

Start Day:	Range	1 to 31
	Default Value	1

DURATION — The Duration field indicates how long the holiday will last (in days).

Duration:	Range	0 to 365
	Default Value	0

As an example, if a Holiday is configured for Month 2, Day 5, Duration 2, then the Holiday will start February 5 and end February 7.

Occupancy Configuration Screen — The Occupancy Configuration Screen is used to configure the occupancy schedule for the fan coil controller. See Fig. 37.

MANUAL OVERRIDE HOURS — The Manual Override Hours point is used to command a timed override by entering the number of hours the override will be in effect. If the occupancy schedule is occupied when this number is downloaded, the current occupancy period will be extended by the number of hours downloaded.

If the current occupancy period is unoccupied when the occupancy override is initiated, the mode will change to occupied for the duration of the number of hours downloaded. If the occupancy override is due to end after the start of the next occupancy period, the mode will transition from occupancy override to occupied without becoming unoccupied and the occupancy override timer will be reset.

An active occupancy override or a pending occupancy override may be canceled by downloading a zero to this configuration. Once a number other than zero has been downloaded to this configuration, any subsequent downloads of any value other than zero will be ignored by the zone controller.

NOTE: Manual Overrides are not tracked by Tenant Billing Reports.

Manual Override Hours:	Units	hours
	Range	0 to 4
	Default Value	0

Description	Value	Units	Name	Notes
Description:	**Fan Coil Control**		DevDesc	
Location:			Location	
Software Part Number:	CESR131212-05		PartNum	
Model Number:			ModelNum	
Serial Number:			SerialNo	
Reference Number:	Version 2.0		RefNum	

Fig. 35 — Controller Identification Screen

Description	Value	Units	Name	Notes
Start Month	**1**		MONTH	
Start Day	**1**		DAY	
Duration	**0**		DURATION	

Fig. 36 — Holiday Configuration Screen

OCCUPANCY SCHEDULE — For flexibility of scheduling, the occupancy programming is broken into eight separate periods. For each period the schedule contains the following fields: Day of Week, Occupied From, and Occupied To.

DAY OF WEEK — The Day of Week configuration consists of eight fields corresponding to the seven days of the week and a holiday field in the following order: Monday, Tuesday, Wednesday, Thursday, Friday, Saturday Sunday, Holiday.

It is displayed as:

M	T	W	Th	Fr	Sa	Su	Hol
0	0	0	0	0	0	0	0

If a 1 is configured in the corresponding place for a certain day of the week, the related "Occupied from" and "Occupied to" times for that period will take effect on that day of the week. If a 1 is placed in the holiday field, the related times will take effect on a day configured as a holiday. A zero means the schedule period will not apply to that day.

Day of week: Range 0 or 1
Default Values 11111111 for period 1, 00000000 for the rest of the periods

OCCUPIED FROM — This field is used to configure the hour and minute, in military time, that the mode for the fan coil controller will switch to occupied.

Occupied From: Units Hours:Minutes
Range 00:00 to 24:00 (Minutes 00 to 59)
Default Value 00:00

OCCUPIED TO — This field is used to configure the hour and minute, in military time, that the mode for the fan coil controller switches from occupied to unoccupied.

Occupied To: Units Hours:Minutes
Range 00:00 to 24:00 (Minutes 00 to 59)
Default Value 24:00

→ **Runtime Configuration Screen —** The Runtime Configuration screen is used to configure the Runtime system function. See Fig. 38.

The Runtime system function determines how long the configured discrete points have been on. Up to 16 points can be configured in each Runtime table. Up to 4 tables can be configured. Each point is read every minute and the amount of runtime is recorded. This data is then used by a CCN Data Collection III option. Once an hour, the Data Collection supervisory device transmits an inquiry to the Comfort Controller. The Comfort Controller sends back the run-time value for each configured point.

POINT n NAME — The Point n Name set point specifies the discrete point being monitored. There are 16 points where n represents the numbers 1 through 16.

Point n Name: Units ASCII
Range 8 characters (Bldg Spvr)
96 characters (LID 6400)
32 characters (LID 1600)
Default Value SENSDI00

POINT n TYPE — The Point n Type set point specifies whether the discrete point being monitored is a normal on/off type or and inverted off/on type. There are 16 points where n represents the numbers 1 through 16.

Point n Type: Units ASCII (Bldg Spvr)
0 or 1 (LID)
Range Normal or Invert (Bldg Spvr)
0 or 1 (LID)
Default Value Normal (Bldg Spvr)
1 (LID)

Set Point Screen — The Set Point screen is used to configure the occupied and unoccupied set points. See Fig. 39.

OCCUPIED LOW — The Occupied Low set point describes the low temperature limit of the space during Occupied mode.

Occupied Low: Units degrees F (degrees C)
Range 40.0 to 90.0
Default Value 70.0

OCCUPIED HIGH — The Occupied High set point describes the high temperature limit of the space during occupied mode. This value must be at least 1.0° F above the occupied low limit or the fan coil controller will automatically adjust the value to be 1.5 F above the occupied low limit.

Occupied High: Units degrees F (degrees C)
Range 45.0 to 99.9
Default Value 74.0

UNOCCUPIED LOW — The Unoccupied Low set point describes the low temperature limit of the space during Unoccupied mode.

Unoccupied Low: Units degrees F (degrees C)
Range 40.0 to 90.0
Default Value 55.0

UNOCCUPIED HIGH — The Unoccupied High set point describes the high temperature limit of the space during unoccupied mode. This value must be at least 1.0° F above the unoccupied low limit or the fan coil controller will automatically adjust the value to be 1.5 F above the unoccupied low limit.

Unoccupied High: Units degrees F (degrees C)
Range 45.0 to 99.9
Default Value 90.0

OCCUPIED HIGH RELATIVE HUMIDITY — The Occupied High Relative Humidity set point describes the high humidity limit of the space during Occupied mode.

Occupied High Relative Humidity: Units % RH
Range 0.0 to 100.0
Default Value 100.0

UNOCCUPIED HIGH RELATIVE HUMIDITY — The Unoccupied High Relative Humidity set point describes the high humidity limit of the space during Unoccupied mode.

Unoccupied High Relative Humidity: Units % RH
Range 0.0 to 100.0
Default Value 100.0

Description	Value	Units	Name	Notes
Manual Override Hours	0	hours	OVRD	
Period 1: Day of Week	11111111		DOW1	
Period 1: Occupied from	00:00		OCC1	
Period 1: Occupied to	24:00		UNOCC1	
Period 2: Day of Week	00000000		DOW2	
Period 2: Occupied from	00:00		OCC2	
Period 2: Occupied to	24:00		UNOCC2	
Period 3: Day of Week	00000000		DOW3	
Period 3: Occupied from	00:00		OCC3	
Period 3: Occupied to	24:00		UNOCC3	
Period 4: Day of Week	00000000		DOW4	
Period 4: Occupied from	00:00		OCC4	
Period 4: Occupied to	24:00		UNOCC4	
Period 5: Day of Week	00000000		DOW5	
Period 5: Occupied from	00:00		OCC5	
Period 5: Occupied to	24:00		UNOCC5	
Period 6: Day of Week	00000000		DOW6	
Period 6: Occupied from	00:00		OCC6	
Period 6: Occupied to	24:00		UNOCC6	
Period 7: Day of Week	00000000		DOW7	
Period 7: Occupied from	00:00		OCC7	
Period 7: Occupied to	24:00		UNOCC7	
Period 8: Day of Week	00000000		DOW8	
Period 8: Occupied from	00:00		OCC8	
Period 8: Occupied to	24:00		UNOCC8	

Fig. 37 — Occupancy Configuration Screen

Description	Value	Units	Name	Notes
Point n Name (n = 1 to 16)	Text String		PTnNAME (n = 1 to 16)	
Point n Type (n = 1 to 16)	Bldg Spvr = Normal/Invert LID = X		PTnTYPE (n = 1 to 16)	

→ **Fig. 38 — Runtime Configuration Screen**

Service Configuration Selection — The Service Configuration Selection screen is used to configure the service set points of the fan coil controller. See Fig. 40.

TWO-PIPE CHANGEOVER — The Two-Pipe Changeover configuration defines if the Fan Coil is on a two-pipe system. If the fan coil is on a two-pipe system, then it must use the same supply and return lines for both the heating and cooling source. A changeover temperature sensor is required.

Two-Pipe Changeover:	Units	ASCII
	Range	Disable/Enable
	Default Value	Disable

FAN OPERATION — The Fan Operation configuration is used to define how the fan will operate during occupied periods. The fan can operate in a continuous mode or cycle on a demand for heat or cool. If this decision is set to continuous (1) the fan will operate continuously during the occupied periods and operate only during heating, cooling, and dehumidification during unoccupied periods. If the configuration is set to automatic (0), the fan will only operate only if heating, cooling or dehumidification is required (and heating or cooling is available).

Fan Operation:	Range	0 to 1
	Default Value	1 (continuous)

NUMBER OF FAN SPEEDS — The Number of Fan Speeds configuration is used to define the number of fan speeds wired on the fan coil. If the fan is in automatic control, the fan will operate at the lowest speed (0%) if dehumidification is required. The fan will operate at the highest speed (Maximum Output %) if any stage of electric heat is operating and the supply air temperature exceeds 130 F or if any stage of DX cooling is operating and the supply air temperature falls below 55 F. The fan speed will resume normal operation after all stages of electric heat are deactivated and the supply air temperature falls below 100 F and if all stages of DX cooling are disabled. The fan will operate as a single speed fan at the speed desired by the user if a T57 sensor has selected manual speed control operation.

Number of Fan Speeds (1-3):	Range	0 to 3
	Default Value	3

AUTOMATIC FAN SPEED CONTROL — Automatic fan speed control is based on a PID control which calculates the fan speed as a value between 0 and the Maximum Output % based upon the amount of error (P) and time (I) that the space temperature has deviated from set point. The zone controller evaluates the fan speed every minute. The calculated value is displayed in the maintenance table. The Fan PID includes the following set points: Proportional Gain, Integral Gain, Derivative Gain, and Starting Value.

Proportional Gain:	Range	0.0 to 40.0
	Default Value	10.0
Integral Gain:	Range	0.0 to 10.0
	Default Value	3.0
Derivative Gain:	Range	0.0 to 20.0
	Default Value	0.0
Starting Value:	Units	%
	Range	0.0 to 100.0
	Default Value	0.0

COOLING TYPE — The Cooling Type configuration sets the type of cooling that the fan coil will use. Cooling type has four selections available: 0 = None, 1 = Modulating Valve, 2 = Two-Position Valve, 3 = Direct Expansion Cooling.

Cooling Type:	Range	0 to 3
	Default Value	0

COOLING CONTROL — The fan coil controller reads the space temperature sensor and compares the temperature to the current high set point. If it exceeds the set point, and cooling is configured and available, the zone controller then calculates the required supply-air temperature to satisfy the given conditions.

A Proportional / Integral / Derivative (PID) loop is used. The modulating control function compares the submaster reference from the PID loop to the supply-air temperature and then calculates the direction and time to position the valve. The Cooling PID includes the following set points: Proportional Gain, Integral Gain, Derivative Gain, and Starting Value.

Proportional Gain:	Range	0.0 to 40.0
	Default Value	8.0
Integral Gain:	Range	0.0 to 10.0
	Default Value	0.3
Derivative Gain:	Range	0.0 to 20.0
	Default Value	0.0
Starting Value:	Units	Degrees F
	Range	50.0 to 90.0
	Default Value	65.0

NOTE: Default values are shown for Type 1 modulating Cooling. For other cooling types, refer to the following:

Variable	2 Position and 1 Stage DX	2 Stage DX
PG	24.0	12.0
IG	0.0	0.5
Starting Value	65.0	65.0

Description	Value	Units	Name	Notes
Setpoints				
Occupied Low Setpoint	**70.0**	dF	OHSP	
Occupied High Setpoint	**74.0**	dF	OCSP	
Unoccupied Low Setpoint	**55.0**	dF	UHSP	
Unoccupied High Setpoin	**90.0**	dF	UCSP	
Occupied High Humidity	**100.0**	%RH	ORHH	
Unoc High Humidity	**100.0**	%RH	URHH	

Fig. 39 — Set Point Screen

Description	Value	Units	Name	Notes
2-Pipe Changeover	**Disable**		UNITTYPE	
Fan Control				
Fan Operation	**1**		FANOPR	
0=Auto, 1=Continuous				
# Fan Speeds (1-3)	**3**		FAN_TYPE	
Fan PID				
Proportional Gain	**10.0**		KP	
Integral Gain	**3.0**		KI	
Derivative	**0.0**		KD	
Starting Value	**0.0**	%	STARTVAL	
Cooling Type	**0**		COOL_TYP	
1=Mod, 2=2-Pos, 3=DX				
Cooling PID				
Proportional Gain	**8.0**		KP	
Integral Gain	**0.3**		KI	
Derivative Gain	**0.0**		KD	
Starting Value	**65.0**	dF	STARTVAL	
Staged Cooling				
Number of Stages	**1**		STAGES	
Stage 1 Time Gard	**Enable**		TG1	
Stage 2 Time Gard	**Disable**		TG2	
2-Pos Valve Logic Type	**Normal**		CLT1	
Stage 2 DX Logic Type	**Normal**		CLT2	
Heating Type	**0**		HEAT_TYP	
1=Mod, 2=2 Pos, 3=Elec 4=2-Pipe Chg w/Elec Ht				
Heating PID				
Proportional Gain	**8.0**		KP	
Integral Gain	**0.3**		KI	
Derivative Gain	**0.0**		KD	
Starting Value	**80.0**	dF	STARTVAL	
Fan Off Value	**55.0**	dF	HCROV	
Staged Heating				
Number of Stages	**2**		STAGES	
2-Pos Valve Logic Type	**Normal**		HLT1	
2-Position Damper	**No**		DMP	
Air Quality				
AQ Low Voltage	**0.0**	Volts	AQINLO	
AQ High Voltage	**10.0**	Volts	AQINHI	
AQ Low Reference (PPM)	**0.0**		AQLO	
AQ High Reference (PPM)	**2000.0**		AQHI	
Filter Timer hrs * 100	**15**		FIL_TIMR	
Condensate Pump Timer	**10**	min	CPTIMR	
Space Temp Trim	**0.0**	^F	RATTRIM	
Supply Air Temp Trim	**0.0**	^F	SATTRIM	

→ **Fig. 40 — Service Configuration Selection Screen**

STAGED COOLING — The staging function is used for two position valves or DX cooling (1 or 2 stages). The staging function uses the cooling submaster reference from the PID and compares the value to the supply-air temperature to calculate the required number of output stages to energize.

For DX cooling, configurable Time Guard delays are provided to allow for up to 2 stages of compression. Also a DX Lockout will prevent operation of the DX cooling if the outdoor-air temperature is below this value.

NOTE: Outdoor-air temperature must be provided through a CCN broadcast over the network.

Once cooling is active, a maintenance decision indicates that cooling is in effect. Also the cooling capacity is then calculated based upon the supply-air temperature, the space temperature, and a minimum supply air temperature limit of 50 F.

The cooling algorithm controls the valve or stages of DX cooling to prevent the space temperature from exceeding the current cooling set point (which includes any calculated offset value from a T56 or T57 sensor slide bar during occupied periods). Also, the cooling is controlled so that the supply-air temperature does not fall below 50 F when cooling is active.

Number of Stages:	Range	1, 2
	Default Value	1

The Time Guards must be set to Enable for output to a compressor, and set to Disable for output to a valve or compressor unloader.

Stage 1		
Time Guard:	Range	Disable/Enable
	Default Value	Enable
Stage 2		
Time Guard:	Range	Disable/Enable
	Default Value	Disable

The stage outputs will send a 24 VAC signal to the device when turned on if these configurations are set to normal. The device will be sent a 24 VAC signal in the Off state if Inverted logic is applied.

Two-Position		
Valve Logic Type:	Range	Normal/Inverted
	Default Value	Normal
Stage 2 DX		
Logic Type:	Range	Normal/Inverted
	Default Value	Inverted

→ HEATING TYPE — The Heating Type configuration sets the type of heating that the fan coil will use. Heating type has four selections available: 0 = None, 1 = Modulating Valve, 2 = Two-Position Valve, 3 = Electric Heat, 4 = Pipe Changeover with Electric Heat.

Heating Type:	Range	0 to 4
	Default Value	0

HEATING CONTROL — The fan coil controller determines if a heating demand exists in the space. The zone controller reads the space temperature sensor and compares the temperature to the current low set point (including any calculated offset value from a T56 or T57 sensor) during occupied periods. If it is below the set point, and heating is configured and available, it then calculates the required supply air temperature to satisfy the given conditions. The calculated value (heating submaster reference) is compared to the actual supply-air temperature and the output is then adjusted to satisfy conditions. A Proportional / Integral / Derivative (PID) loop is used. The modulating control function compares the submaster reference from the PID loop to the supply-air temperature and then calculates the direction and time to position the valve.

The staging function is used for two-position valves or electric heating (1 or 2 stages). The staging function uses the heating submaster reference from the PID and compares the value to the Supply Air Temperature to calculate the required number of output stages to energize.

For units using floating point valves, the floating point function compares the submaster reference from the PID loop to the supply-air temperature to calculate the direction and time to position the valve. Both outputs are not allowed to be ON simultaneously.

The heating algorithm will control a modulating heating valve to maintain the space temperature at the midpoint between the current low and high set points whenever dehumidification is active and reheat has been enabled. During this time, a maintenance parameter will be set (reheat flag).

For two pipe changeover systems, the valve/DX output terminations are used for a single water valve. IF/THEN logic determines the routing of the control signals from the appropriate heating or cooling algorithm to the cooling valve hardware outputs. The decision to route either heating or cooling is based upon the Changeover Mode and the 2-pipe Changeover System configuration equal to Yes. The actual control type output is determined by the configured Heat Type.

IMPORTANT: For 2-pipe systems, both heating and cooling types must be the same (for example, both set to 1, modulating, or both set to 2, two-position).

The Heating PID includes the following set points: Proportional Gain, Integral Gain, Derivative Gain, Starting Value and Fan Off Value.

Proportional Gain:	Range	0.0 to 40.0
	Default Value	8.0
Integral Gain:	Range	0.0 to 10.0
	Default Value	0.3
Derivative Gain:	Range	0.0 to 20.0
	Default Value	0.0
Starting Value:	Units	Degrees F
	Range	40.0 to 90.0
	Default Value	80.0
Fan Off Value:	Units	Degrees F
	Range	35.0 to 120.0
	Default Value	55.0

NOTE: Default values are shown for Type 1 modulating Heating. For other heating types, refer to the following:

Variable	2 Position/1 Stage Electric	2 Stage Electric
PG	40.0	40.0
IG	0.0	0.5
Starting Value	85.0	85.0

To maintain a minimum temperature that may prevent a coil freeze up on units located on an exterior wall, a configured fan off value is used when the unit is Off. This feature is only applicable to modulating heating and the Changeover Mode must be Heating for two pipe changeover systems. Heat capacity will be displayed as 0% and the Heating in Effect maintenance parameter will display NO during minimum duct temperature control.

STAGED HEATING — The Staged Heating function is used for two-position valves or for electric heat (1 or 2 stages). The staging function uses the heating submaster reference value from the PID and compares it to the supply-air temperature to calculate the required number of output stages to energize.

Number of Stages:	Range	1 to 2
	Default Value	1

Two-Position Valve Logic:	Range	Normal/Inverted
	Default Value	Normal

The outputs will send a signal to the device when turned on if these configurations are set to normal. The device will be sent a signal in the Off state if Inverted logic is applied.

For electric heat, a Time Guard is provided for the first stage to prevent excessive cycling and premature contactor failure. Once heating is active, a maintenance decision indicates that heating is in effect. Also the heating capacity is then calculated based upon the Supply Air Temperature, the Space Temperature, and a maximum supply air temperature limit of 140 F.

TWO POSITION DAMPER — The Two-Position Damper configuration should be set to 1 if the fan coil controller is used with a two-position outdoor air ventilation damper. The damper control logic determines that if the fan is OFF, or the occupancy status is Unoccupied or Biased Occupied, the damper will be closed. If the fan is ON and the occupancy status is occupied, the damper will be open.

Two Position Damper:	Range	NO/YES
	Default Value	NO

INDOOR AIR QUALITY — The Indoor Air Quality set points configure the CO_2 sensor for use with the zone controller. The voltage and reference set points allow the zone controller to interpret the voltage signal from the CO_2 sensor. The AQ Low Voltage set point defines the lowest voltage that should be read from the air quality sensor. The AQ High Voltage configuration defines the highest voltage which should be read from the air quality sensor. The Low Reference configuration defines the value in parts per million which correlate to the low voltage reading from the air quality sensor. The High Reference configuration defines the value in parts per million which correlate to the high voltage reading from the air quality sensor.

AQ Low Voltage:	Units	Volts
	Range	00.0 to 10.0
	Default Value	0.0
AQ High Voltage:	Units	Volts
	Range	00.0 to 10.0
	Default Value	10.0
Low Reference:	Units	None (Parts Per Million implied)
	Range	0 to 5000
	Default Value	0
High Reference:	Units	None (Parts Per Million implied)
	Range	0 to 5000
	Default Value	2000

FILTER TIMER HOURS — The Filter Timer Hours configuration determines when the filter status will display a “Dirty” alarm. When the Filter Timer Hours is configured to a value other than zero and fan run time exceeds the value configured, the filter status will display “Dirty” and a CCN alarm will be generated. Setting the configured Filter Timer Hours value to zero will disable the alarm condition. The value of the timer is stored in EEPROM to protect it in the event of a power failure. The value is stored every 24 hours. The value is multiplied by 100. For example, if the Filter Timer Hours is set to 6, the “Dirty” condition would be generated after 600 hours of run time.

Filter Timer Hours:	Range	0 to 99
	Default Value	15

CONDENSATE PUMP TIMER — The Condensate Pump Timer configuration is used to set the amount of time which must elapse, after the Condensate pump overflow contact closes, before the fan will be shut down. Heating and cooling is disabled and an alarm message is broadcast.

Condensate Pump Timer:	Units	minutes
	Range	1 to 60
	Default Value	10

SPACE TEMPERATURE TRIM — The Space Temperature Trim configuration is used to calibrate the temperature display for a sensor that does not appear to be reading correctly.

Space Temperature Trim:	Units	Delta F
	Range	–5.0 to 5.0
	Default Value	0.0

SUPPLY AIR TEMPERATURE TRIM — The Supply Air Temperature Trim configuration is used to calibrate the temperature display for a sensor that does not appear to be reading correctly.

Supply Air Temperature Trim:	Units	Delta F
	Range	–5.0 to 5.0
	Default Value	0.0

Fan Coil Configuration — The Fan Coil Configuration screen allows the user to configure the functions of the fan coil. See Fig. 41.

OCCUPANCY SCHEDULE NUMBER — The Occupancy Schedule Number determines which Global Occupancy Schedule that the zone controller will follow. A value of 64 disables global occupancy from CCN and will decide Occupancy from its local schedule. A value of 65 and above will allow the zone controller to follow the global occupancy schedule of the number broadcast over CCN.

Occupancy Schedule Number	Range	64 to 99
	Default Value	64

GLOBAL SCHEDULE MASTER — The Global Schedule Master setting configures the zone controller to broadcast or receive a global schedule. If set to Yes, the zone controller will act as a global schedule master and its schedule will be broadcast to the CCN. If set to No, the zone controller will not broadcast a global schedule and it will receive the configured occupancy schedule number.

Global Schedule Master:	Range	No/Yes
	Default Value	No

TIMED OVERRIDE — The Timed Override decision is used to configure a timed override duration by entering the number of hours the override will be in effect. Pressing the override button on the space temperature sensor will cause an override.

If the current occupancy period is unoccupied when the occupancy override is initiated, the mode will change to occupied for the duration of the number of hours downloaded. If the occupancy override is due to end after the start of the next occupancy period, the mode will transition from occupancy override to occupied without becoming unoccupied, and the occupancy override timer will be reset.

Timed Override Hours:	Range	0 to 4
	Default Value	0

→ ENABLE REMOTE/FAN INPUT — The Enable Remote/Fan Input is used to configure the remote occupancy or fan status input. When set to a 0 the input functions as a remote occupancy contact. When set to a 1 the input functions as a fan status input.

Enable Remote/ Fan Input:	Range	0=Remote Start Input, 1=Fan Status Input
	Default Value	0=Remote Start Input

→ BROADCAST ACKNOWLEDGER — This configuration defines if the fan coil controller will be used to acknowledge broadcast messages on the CCN bus. One broadcast acknowledger is required per bus, including secondary busses created by the use of a bridge.

Broadcast Acknowledger:	Range	No/Yes
	Default Value	No

→ TEMP SENSOR MODE — Each fan coil controller has the capability to broadcast its attached space temperature sensor data or listen to another controller's sensor data over the network. All controllers sharing the same sensor must be installed on the same CCN bus.

There are three configuration decisions that must be configured in order to share sensors. The Temp Sensor Mode is used to specify if a controller will use its own local sensor, broadcast its local sensor, or listen to a sensor broadcast. The Temp Sensor Config is used to specify if the controller is sharing the space temperature only, space temperature with temperature offset slidebar or space temperature, temperature offset slidebar and fan speed. The Broadcast Element # decision is used to specify which controller number a zone will listen for when configured to receive another controller's broadcast.

Temp Sensor Mode:	Units	None
	Range	1=Local Sensor, 2=Broadcast, 3=Listen
	Default Value	1
Temp Sensor Config:	Units	None
	Range	1=SPT, 2=SPT and offset, 3=SPT, offset and fan speed
	Default Value	1
Broadcast Element #:	Units	None
	Range	1 to 239
	Default Value	1

MAXIMUM OFFSET ADJUSTMENT — The Maximum Offset Adjustment value determines to what degree the occupied heating and cooling set points can be adjusted by the set point adjustment slide bar on the space temperature sensor.

Maximum Offset Adjustment:	Units	None
	Range	1 to 239
	Default Value	1

UNOCCUPIED FAN CYCLING — The Unoccupied Fan Cycling option, when enabled, causes the fan to run for one minute each hour during unoccupied periods. The exact time of operation is determined by the CCN address. The purpose of this mode is to prevent air stagnation from causing the unit to operate or not operate based upon improperly sensing the space temperature conditions.

Unoccupied Fan Cycling:	Range	Disable/Enable
	Default Value	Disable

Description	Value	Units	Name	Notes
Occupancy Schedule #	**64**		SCH	
Global Schedule Master	**No**		GSM	
Timed Override Hours	**0**	hours	TIMOVRID	
Enable Remote/Fan Input 0 — Remote Start Input 1 — Fan Status Input	**0**		EN_RC_FS	
Broadcast Acknowledger	**No**		BROACK	
Temp Sensor Mode 1 — Local Sensor 2 — Broadcast 3 — Listen	**1**		BRD_RECV	
Temp Sensor Config 1 — SPT 2 — SPT & Offset 3 — SPT, Offset, Fan Spd	**1**		SENSCFG	
Broadcast Element #	**04**		BRDDEVID	
Max Offset Adjustment	**2.0**	^F	LIMT	
Unoccupied Fan Cycling	**Disable**		FAN_CYCL	
DX Outdoor Air Lock-out	**-40.0**	dF	DXLO	
Local RH Sensor	**No**		RHSENS	
Reheat	**Disable**		REHEAT	
Linkage Thermostat				
Cool Strt Bias(min/deg)	**10**	min	KCOOL	
Heat Strt Bias(min/deg)	**10**	min	KHEAT	

→ Fig. 41 — Fan Coil Configuration Screen

DX OUTDOOR AIR LOCKOUT — The DX Lockout configuration will prevent operation of the DX cooling if the outdoor-air temperature is below the configured value.

DX Outdoor Air Lockout:	Units	F
	Range	–40.0 to 65.0
	Default Value	–40.0

LOCAL RH SENSOR — The Local RH Sensor configuration defines if a local relative humidity sensor is installed.

Local RH Sensor:	Range	No/Yes
	Default Value	No

REHEAT — The reheat configuration defines if the zone controller will allow simultaneous heating and cooling to maintain space temperature during the dehumidification mode.

NOTE: The heating coil must be located downstream from the cooling coil if reheat is desired.

Reheat:	Range	Disable/Enable
	Default Value	Disable

LINKAGE THERMOSTAT — The Linkage Thermostat start time biases allow the installer to configure the time per degree the space should take to recover in the heat and cool modes for optimum start with a Linkage Thermostat. These numbers will be used to calculate the Start Bias time.

Cool Start Bias:	Units	minutes/degree
	Range	0 to 60
	Default Value	10
Heat Start Bias	Units	minutes/degree
	Range	0 to 60
	Default Value	10

Occupancy Maintenance Table — The Occupancy Maintenance Table is used to check the occupied schedule. Information concerning the current occupied period is displayed. See Fig. 42.

MODE — The Mode point displays the current occupied mode for the fan coil. If the fan coil is following its own local schedule this is the result of the local schedule status. If the fan coil is configured to follow a global schedule, this point displays the mode last received from a global schedule broadcast. The point will display a 0 for unoccupied and a 1 for occupied.

Mode:	Display Range	0 to 1
	Default Value	0
	Network Access	None

CURRENT OCCUPIED PERIOD — If the fan coil is configured to determine occupancy locally, the Current Occupied Period point is used to display the current period determining occupancy.

Current Occupied Period:	Display Range	1 to 8
	Default Value	0
	Network Access	None

OVERRIDE IN PROGRESS — The Override in Progress point is used to display if an occupancy override is in progress. The point will display a yes if an override is in progress, or a no if there is no override.

Override In Progress:	Display Range	Yes/No
	Default Value	No
	Network Access	None

OVERRIDE DURATION — The Override Duration point displays the number of minutes remaining for an occupancy override which is in effect. If the number of override hours was downloaded, the value will be converted to minutes.

Override Duration:	Display Units	minutes
	Display Range	0 to 240
	Default Value	0
	Network Access	None

OCCUPIED START TIME — The Occupied Start Time point shows the time that the current occupied mode began. If the current mode is unoccupied or the fan coil is following a global schedule, the value displayed by this point will remain at default.

Occupied Start Time:	Display Range	00:00 to 23:59
	Default Value	0:00
	Network Access	None

UNOCCUPIED START TIME — The Unoccupied Start Time point shows the time that the current occupied mode will end. This will also be the beginning of the next unoccupied mode. If the current mode is unoccupied or the fan coil is following a global schedule, the value displayed by this point will remain at default.

Unoccupied Start Time:	Display Range	00:00 to 24:00
	Default Value	0:00
	Network Access	None

Description	Value	Units	Name	Notes
Mode	0		MODE	
Current Occupied Period	0		PERIOD	
Override in Progress	No		OVERLAST	
Override Duration	0	min	OVERDURA	
Occupied Start Time	00:00		OCCSTART	
Unoccupied Start Time	00:00		UNSTART	
Next Occupied Day	Mon		NXTOCCD	
Next Occupied Time	00:00		NXTOCCT	
Next Unoccupied Day			NXTUNOD	
Next Unoccupied Time	00:00		NXTUNOT	
Last Unoccupied Day			PRVUNOD	
Last Unoccupied Time	00:00		PRVUNOT	

Fig. 42 — Occupancy Maintenance Table Screen

NEXT OCCUPIED DAY — The Next Occupied Day point displays the day of week when the next occupied period will begin. This point is used with the Next Occupied Time so the user will know when the next occupied period will occur. If the fan coil is following a global schedule this point will remain at default.

Next Occupied Day:	Display Range	MON, TUE, WED, THU, FRI, SAT, SUN
	Default Value	No display (Blank)
	Network Access	None

NEXT OCCUPIED TIME — The Next Occupied Time point displays the time day when the next occupied period will begin. This point is used with the Next Occupied Day so the user will know when the next occupied period will occur. If the fan coil is following a global schedule this point will remain at default.

NOTE: If the current mode is occupied, this point makes reference to the next occupied period and, in most cases, it will not be the same as the current occupied start time.

Next Occupied Time:	Display Range	00:00 to 24:00
	Default Value	0:00
	Network Access	None

NEXT UNOCCUPIED DAY — The Next Unoccupied Day point displays the day of week when the next unoccupied period will begin. This point is used with the Next Unoccupied Time so the user will know when the next unoccupied period will occur. If the fan coil is following a global schedule this point will remain at default.

Next Unoccupied Day:	Display Range	MON, TUE, WED, THU, FRI, SAT, SUN
	Default Value	No display (Blank)
	Network Access	None

NEXT UNOCCUPIED TIME — The Next Unoccupied Time point displays the time day when the next unoccupied period will begin. This point is used with the Next Unoccupied Day so the user will know when the next unoccupied period will occur. If the fan coil is following a global schedule this point will remain at default.

NOTE: If the current mode is occupied, this point makes reference to the next unoccupied period and, in most cases, will be the same as the unoccupied start time.

Next Unoccupied Time:	Display Range	00:00 to 24:00
	Default Value	0:00
	Network Access	None

LAST UNOCCUPIED DAY — The Last Unoccupied Day point displays the day of week when the fan coil last changed from occupied to the Unoccupied mode. This point is used in conjunction with the Last Unoccupied Time to know the last time and day when the fan coil became unoccupied. If the fan coil is following a global schedule this point will remain at default.

Last Unoccupied Day:	Display Range	MON, TUE, WED, THU, FRI, SAT, SUN
	Default Value	No display (Blank)
	Network Access	None

LAST UNOCCUPIED TIME — The Last Unoccupied Time point displays the time of day when the fan coil last changed from occupied to the Unoccupied mode. This point is read in conjunction with the Last Unoccupied Day to know the last time and day when the fan coil became unoccupied. If the fan coil is following a global schedule this point will remain at default.

Last Unoccupied Time	Display Range	00:00 to 24:00
	Default Value	0:00
	Network Access	None

Fan Coil Maintenance Table — The Fan Coil Maintenance Table is used to service the fan coil. See Fig. 43.

OCCUPIED — The Occupied point indicates if the Fan Coil is operating in the occupied mode.

Occupied:	Display Range	No/Yes
	Default Value	No
	Network Access	Read Only

LINKAGE IN EFFECT — The Linkage in Effect point displays whether an air source linkage is in effect. This means the fan coil controller is being controlled by a Linkage Thermostat.

Linkage in Effect:	Display Range	No/Yes
	Default Value	No
	Network Access	Read Only

TIMED OVERRIDE IN EFFECT — The Timed Override In Effect point shows if a timed override is currently in effect.

Timed Override in Effect:	Display Range	No/Yes
	Default Value	No
	Network Access	Read Only

START BIAS TIME — The Start Bias Time, in minutes, is calculated during the unoccupied period by the fan coil controller as needed to bring the temperature up or down to the set point under the optimum start routine. The start time bias for heat and cool are configurable. This value will be reported to the Linkage Thermostat if it is used. It will also be used by the fan coil's internal occupancy schedule to determine the start of the Optimal Start period. It cannot be used with Global Scheduling.

Start Bias Time:	Display Units	minutes
	Display Range	0 to 180
	Default Value	0
	Network Access	Read only

SET POINT OFFSET — The Set Point Offset point displays the set point offset currently requested at the 33ZCT56SPT and 33ZCT57SPT room sensor with set point offset capability. the set point offset value is calculated only during occupied periods.

Set Point Offset:	Display Units	Delta F (Delta C)
	Display Range	–20.0 to 20.0
	Default Value	0.0
	Network Access	Read Only

→ T57 STATUS — The 33ZCT57SPT thermostat provides a voltage input to the fan coil controller in order to select fan speed operation. The 10 vdc power and ground are provided by the fan coil controller and the potentiometer wiper provides the voltage signal back to the zone controller. The following is a table of values displayed by the T57 Status and acceptable voltage ranges for each fan speed position:

Display	Position	Voltage Minimum	Voltage Maximum
0	Off	0.0	0.75
1	Low	2.0	4.0
2	Med	4.9	6.5
3	Hi	7.6	9.1
4	Auto	9.7	10.0

T57 Status:	Display Range	0 to 4
	Default Value	4
	Network Access	Read/Write

Description	Value	Units	Status	Force	Name	Notes
Occupied	Yes				OCCSTAT	
Linkage in Effect	No				DAVCL	
Timed Override in Effect	No				TIMOV	
Start Bias Time	0	min			STRTBIAS	
Setpoint Offset (T-56)	0.0	^F			T56OFF	
T57 Status	**4**				T57STAT	
Heat Master Reference	**70.0**	dF			HCMR	
Heat Submaster Reference	**0.0**	dF			HCSR	
Cool Master Reference	**74.0**	dF			CCMR	
Cool Submaster Reference	**150.0**	dF			CCSR	
Cooling in Effect	No				COOLFLAG	
Heating in Effect	No				HEATFLAG	
Reheat in Effect	No				REHTFLAG	
Fan Speed	0	%			FANPCT	
Fan Speed Medium	**Off**				FANSPD1	
Fan Speed High	**Off**				FANSPD2	
Changeover Temperature	**95.3**	dF			CHGTEMP	
Changeover Status	**Heat**				CHANGOVR	
Linkage Thermostat						
Linkage Status	2				LINKSTAT	
Supervisory Element	0				SUPE-ADR	
Supervisory Bus	0				SUPE-BUS	
Supervisory Block	0				BLOCKNUM	
Average Occ Heat Setpt	0.0	dF			OCLOSTPT	
Average Occ Cool Setpt	0.0	dF			OCHISTPT	
Average Unoc Heat Setpt	0.0	dF			UNLOSTPT	
Average Unoc Cool Setpt	0.0	dF			UNHISTPT	
Average Zone Temp	0.0	dF			AZT	
Average Occ Zone Temp	0.0	dF			AOZT	
Occupancy Status(1=occ)	1				OCCSTAT	

Fig. 43 — Fan Coil Maintenance Table Screen

HEAT MASTER REFERENCE — The Heat Master Reference point displays the occupied low set point, if occupied, or the unoccupied low set point, if unoccupied. The set point offset (if applicable) is calculated into the value.

Heat Master Reference:		
	Display Units	degrees F (degrees C)
	Display Range	40.0 to 90.0
	Default Value	70.0
	Network Access	Read Only

HEAT SUBMASTER REFERENCE — If heat is enabled, the Heat Submaster Reference point displays the desired supply air temperature calculated to heat the space. This is a result of the heating PID loop calculation.

Heat Submaster Reference:		
	Display Units	degrees F (degrees C)
	Display Range	35.0 to 140.0
	Default Value	0
	Network Access	Read/Write

COOL MASTER REFERENCE — The Cool Master Reference point displays the occupied high set point, if mode is occupied, or the unoccupied high set point if mode is unoccupied. The set point offset (if applicable) is calculated into the value.

Cool Master Reference:		
	Display Units	degrees F (degrees C)
	Display Range	45.0 to 99.9
	Default Value	74.0
	Network Access	Read Only

COOL SUBMASTER REFERENCE — If cooling is enabled, the Cool Submaster Reference point displays the desired supply air temperature calculated to cool the space. This is a result of the cooling PID loop calculation.

Cool Submaster Reference:		
	Display Units	degrees F (degrees C)
	Display Range	40.0 to 150.0
	Default Value	0
	Network Access	Read/Write

COOLING IN EFFECT — The Cooling In Effect point shows if there is a demand for cooling in the space. The space temperature must be above the Occupied High or Unoccupied High set point.

Cooling in Effect:		
	Display Range	No/Yes
	Default Value	No
	Network Access	None

HEATING IN EFFECT — The Heating In Effect point shows if there is a demand for heat in the space. The space temperature must be below the Occupied Low or Unoccupied Low set point.

Heating in Effect:		
	Display Range	No/Yes
	Default Value	No
	Network Access	None

REHEAT IN EFFECT — The Reheat in Effect point shows if the fan coil is in a dehumidification mode and attempting to reheat the dehumidified air to maintain the space temperature. If Reheat is enabled, the zone controller will fully open the cooling valve, if the space temperature is above the heating set point. Simultaneously, it will modulate the heating valve to raise or maintain the space temperature at the configured occupied cooling set point during dehumidification.

Reheat in Effect:		
	Display Range	No/Yes
	Default Value	No
	Network Access	None

FAN SPEED — The Fan Speed point displays the current fan speed (in percentage).

Fan Speed:		
	Display Units	%
	Display Range	0 to 100
	Default Value	0
	Network Access	None

FAN SPEED MEDIUM — The Fan Speed Medium point displays whether the medium fan speed is on or off.

Fan Speed Medium:		
	Display Range	Off/On
	Default Value	Off
	Network Access	Read/Write

FAN SPEED HIGH — The Fan Speed High point displays whether the high fan speed is on or off.

Fan Speed High:		
	Display Range	Off/On
	Default Value	Off
	Network Access	Read/Write

CHANGEOVER TEMPERATURE — The Changeover Temperature point displays the value from the changeover sensor (water temperature sensor attached to the two-pipe water loop) for the fan coil. The Changeover Temperature value is forcible. It may be received through CCN from a Comfort Controller that monitors the water loop temperature and provides control of boilers and/or chillers.

Changeover Temperature:		
	Display Units	degrees F (degrees C)
	Display Range	–40.0 to 245.0
	Default Value	–40.0
	Network Access	Read/Write

CHANGEOVER STATUS — Applicable to two-pipe heating/cooling systems, the Changeover Status point determines whether the temperature indicated by the changeover sensor will allow the fan coil to provide heating or cooling operation. The value is determined from the changeover temperature sensor reading as:

<65 F = COOL

>80 F = HEAT

between 65 and 80 = last active status

Changeover Status is forcible. It may be received through CCN from a Comfort Controller which monitors and maintains the water loop temperature.

NOTE: This value defaults to HEAT if a changeover sensor failure occurs or for non-changeover systems.

Changeover Status:		
	Display Range	Heat/Cool
	Default Value	Heat
	Network Access	Read/Write

LINKAGE THERMOSTAT — The following Linkage Thermostat points display the standard values received from a Linkage Thermostat (if one is being used to provide space temperature, set point and occupancy information) for this fan coil. The Linkage Status point displays the status of the linkage broadcasts from the Linkage Thermostat. A value of 0 is normal communication. A value of 1 is communication failure. A value of 2 is not configured. A value of 3 is a change in communication status between supervisory and equipment.

Linkage Status:		
	Display Range	0 to 3
	Default Value	2
	Network Access	None

The Average Occupied Heat Set Point displays the Occupied Heat set point from the Linkage Thermostat.

Average Occupied Heat Set Point:		
	Display Units	degrees F (degrees C)
	Display Range	0.0 to 99.9
	Default Value	0.0
	Network Access	None

The Average Occupied Cool Set Point displays the Occupied Cool set point from the Linkage Thermostat.

Average Occupied Cool Set Point:	Display Units	degrees F (degrees C)
	Display Range	0.0 to 99.9
	Default Value	0.0
	Network Access	None

The Average Unoccupied Heat Set Point displays the Unoccupied heat set point from the Linkage Thermostat.

Average Unoccupied Heat Set Point:	Display Units	degrees F (degrees C)
	Display Range	0.0 to 99.9
	Default Value	0.0
	Network Access	None

The Average Unoccupied Cool Set Point displays the Unoccupied cool set point from the Linkage Thermostat.

Average Unoccupied Cool Set Point:	Display Units	degrees F (degrees C)
	Display Range	0.0 to 99.9
	Default Value	0.0
	Network Access	None

The Average Zone Temperature displays the space temperature from the Linkage Thermostat.

Average Zone Temperature:	Display Units	degrees F (degrees C)
	Display Range	0.0 to 99.9
	Default Value	0.0
	Network Access	None

The Average Occupied Zone Temperature displays the space temperature from the Linkage Thermostat during occupied periods.

Average Occupied Zone Temperature:	Display Units	degrees F (degrees C)
	Display Range	0.0 to 99.9
	Default Value	0.0
	Network Access	None

The Occupancy Status point displays a 1 if occupancy is reported by the Linkage Thermostat. The Occupancy Status point displays a 0 if occupancy is not reported by the Linkage Thermostat.

Occupancy Status:	Display Range	0, 1
	Default Value	0
	Network Access	None

Water System Manager Maintenance Screen — The Water System Manager Maintenance screen is used to provide maintenance information for the water system. See Fig. 44.

COOLING LINK ACTIVE — The Cooling Link Active decision displays the status of communications between the fan coil and the cool source with which it is linked. If Yes displayed, it indicates that the WSM (Water System Manager) is successfully transmitting information to the fan coil from a linked, configured, cooling source.

A No indicates that the fan coil is not currently communicating with a cooling source. The lack of communication may indicate that the WSMs algorithms are disabled, that the Load Configuration Table is misconfigured, or that communication has failed. The fan coil controller will determine that communication has failed when 5 minutes pass without any cool source data being received from the WSM.

When No is displayed, the Chilled Water Temperature and Cool Source Status decisions continue to display their last valid data.

Cooling Link Active?	Display Units	Yes/No
	Default Value	No

HEATING LINK ACTIVE — The Heating Link Active decision displays the status of communications between the fan coil and the heat source with which it is linked. If Yes displayed, it indicates that the WSM is successfully transmitting information to the fan coil from a linked, configured, heating source.

A No indicates that the fan coil is not currently communicating with a heating source. The lack of communication may indicate that the WSMs algorithms are disabled, that the Load Configuration Table is misconfigured, or that communication has failed. The fan coil controller will determine that communication has failed when 5 minutes pass without any heat source data being received from the WSM. When No is displayed here, the Hot Water Temperature and Heat Source Status decisions continue to display their last valid data.

Heating Link Active?	Display Units	Yes/No
	Default Value	No

COOL SOURCE NUMBER — The Cool Source Number decision displays the number of the cool source that is linked to the fan coil by a WSM. Cool source numbers are determined by the number of the associated Cool Source Configuration Table at the WSM. A 0 will be displayed in this decision if no cool source is configured for the fan coil at the WSM.

Cool Source Number:	Display Units	1 to 4 (cool source numbers)
	Default Value	0 = no cool source

HEAT SOURCE NUMBER — The Heat Source Number decision displays the number of the heat source that is linked to the fan coil by a WSM. Heat source numbers are determined by the number of the associated Heat Source Configuration Table at the WSM. A 0 will be displayed in this decision if no heat source is configured for the fan coil at the WSM.

Heat Source Number:	Display Units	1 to 4 (heat source numbers)
	Default Value	0 = no heat source

OCCUPANCY MODE — The current occupancy status of the fan coil is displayed in this decision. The occupancy mode is occupied when the fan coil's occupancy time schedule is occupied (or biased occupied). It is unoccupied when the fan coil's occupancy schedule is unoccupied.

Occupancy Mode:	Display Units	0 = unoccupied 1 = occupied (or biased occupied)
	Default Value	1

CHILLED WATER TEMPERATURE — The Chilled Water Temperature decision displays the current leaving water temperature at the cool source that is linked to the fan coil by the WSM. The decision will display the value 0.0 if no cool source is configured for the fan coil at the WSM.

Chilled Water Temperature:	Display Units	degrees F (degrees C)
	Default Value	0.0

COOL SOURCE STATUS — This decision displays the current status of the cool source that is linked to the fan coil by the WSM. When this decision displays Off, it indicates either that the cool source is off, or that no cool source is configured at the WSM for the fan coil.

Cool Source Status: Display Units On/Off
Default Value Off

HOT WATER TEMPERATURE — This decision displays the current leaving water temperature at the heat source that is linked to the fan coil by the WSM. The decision will display the value 0.0 if no heat source is configured for the fan coil at the WSM.

Hot Water Temperature: Display Units degrees F (degrees C)
Default Value 0.0

HEAT SOURCE STATUS — This decision displays the current status of the heat source that is linked to the fan coil by the WSM. When this decision displays Off, it indicates either that the heat source is off, or that no heat source is configured at the WSM for the fan coil.

Heat Source Status: Display Units On/Off
Default Value Off

Description	Value	Units	Name	Notes
Cooling Link Active?	No		WSMCSTAT	
Heating Link Active?	No		WSMBSTAT	
Cool Source Number	0		CHLRNUM	
Heat Source Number	0		BLRNUM	
Occupancy Status(1=occ)	1		OCCSTAT	
Chill Water Temperature	0.0	dF	CHWTEMP	
Cool Source Status	Off		CHLRST	
Hot Water Temperature	0.0	dF	HWTEMP	
Heat Source Status	Off		BLRST	

Fig. 44 — Water System Manager Maintenance Screen

Copyright 2000 Carrier Corporation