WSHP for AppController
Installation and Start-up Guide

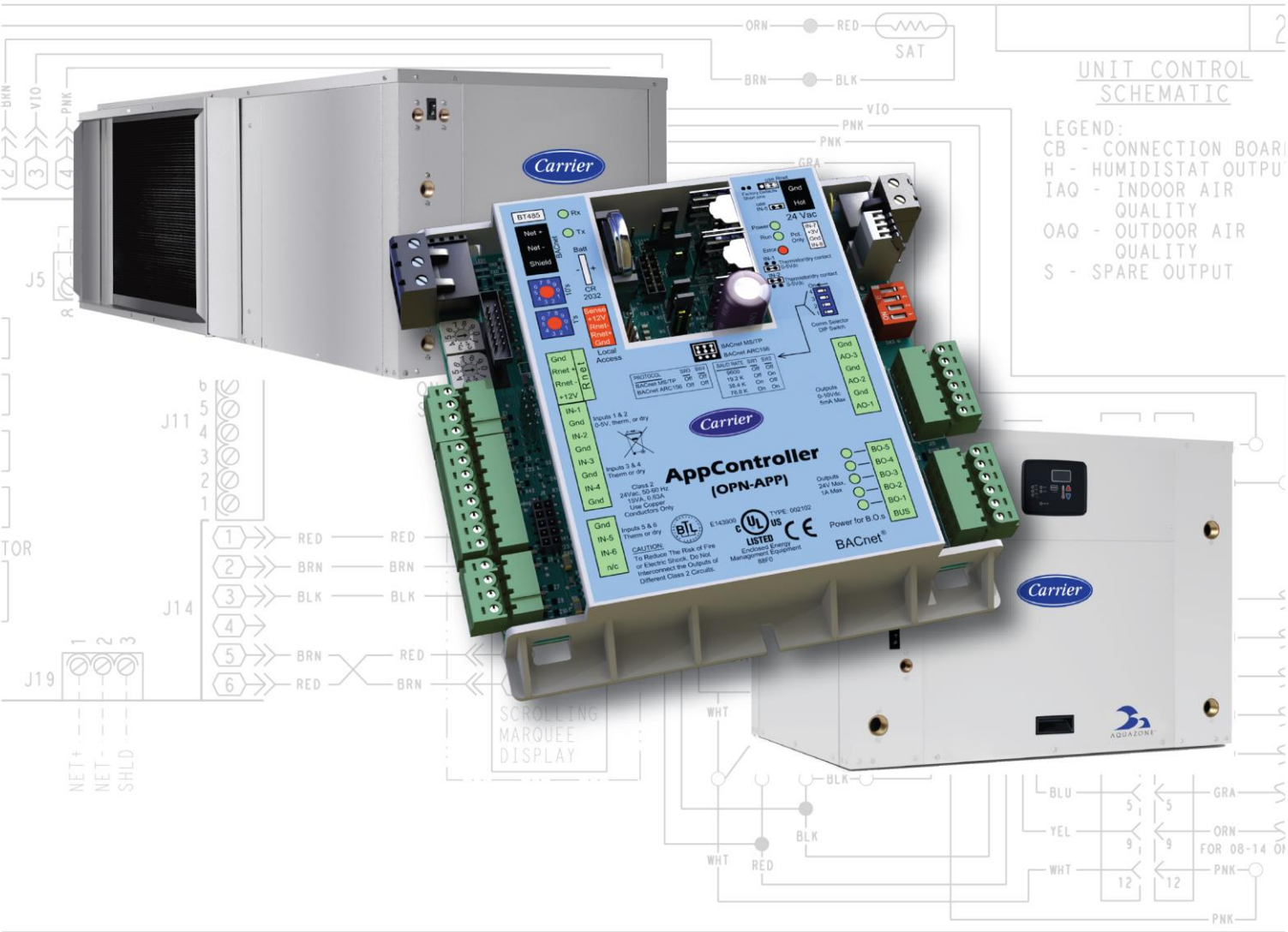

CARRIER CORPORATION ©2021 · Catalog No. 11-808-474-01 · 9/24/2021

Verify that you have the most current version of this document from **www.hvacpartners.com**, the Carrier Partner Community website, or your local Carrier office.

Important changes are listed in **Document revision history** at the end of this document.

CARRIER CORPORATION ©2021. All rights reserved throughout the world. i-Vu is a registered trademark of Carrier Corporation. All other trademarks are the property of their respective owners.

Contents

WSHP for AppController overview and specifications **1**
- **What is the WSHP application?** **1**
- **Specifications** **2**
- **Safety considerations** **3**

Installing the controller **4**
- **Mounting the controller** **4**
- **Wiring the controller for power** **5**
  - To wire for power 5
- **Addressing the controller** **6**
- **Wiring for communications** **6**
  - Wiring specifications for BACnet MS/TP and ARC156 6
  - To wire the controller to the BACnet network 7
- **Wiring inputs and outputs** **7**
  - Inputs and outputs table 7
  - Input wiring specifications 9
  - Inputs 9
  - Binary outputs 10
  - Analog outputs 10
  - To wire inputs and outputs 11
- **Wiring sensors to the controller** **13**
  - Wiring devices to the controller's Rnet port 13
  - Wiring a CO2 sensor 19
  - Wiring a relative humidity sensor 20
- **Wiring equipment to outputs** **21**
  - Wiring specifications 21
  - Single speed fan relay 22
  - 2-speed fan with discrete relay control 22
  - Relay board #E025-71308201 23
  - Aux heating: 2-position or electric 23
  - Aux heating: Modulating valve 24
  - 1 stage of compression 24
  - 2 stages of compression 25
  - Reversing valve 25
  - Outdoor air ventilation damper (2-position or DCV) 26
  - Isolation modulating valve 26
  - 2-position isolation valve 27

Start-up **28**
- **Service Test** **28**
- **Select or create a custom control program and graphic** **30**
- **Configure the WSHP for AppController's properties** **30**

Sequence of Operation **31**
- **Scheduling** **31**
- **Open window contact (optional)** **32**
- **Fire/Smoke detector input** **32**
- **Shutdown input** **32**
- **Indoor fan** **32**
- **Cooling** **34**
- **Heating** **35**
- **Isolation valve** **36**
- **Indoor air quality (IAQ) and demand control ventilation (DCV)** **37**
- **Dehumidification** **37**
- **Demand limiting** **38**

Power failure restart delay 38
Alarms 38
Local access to the controller 40
Troubleshooting 41
LED's 41
Serial number 42
To replace the controller's battery 42
Compliance 43
FCC Compliance 43
CE Compliance 43
BACnet Compliance 43
Appendix A: WSHP for AppController wire list 44
Appendix B: Device Address Binding 45
Appendix C: WSHP for AppController Points/Properties 46
Status 46
Unit Configuration 48
Setpoints 50
Setpoints for ZS and wireless sensors 56
Service Configuration 57
Alarm Configuration 63
Maintenance 66
Alarms 69
Linkage 70
I/O Points 72
Appendix D: WSHP for AppController Points/Properties on the Equipment Touch 75
Navigation screens 75
Startup Wizard 78
Source Water Linkage 80
Document revision history 81

WSHP for AppController overview and specifications

What is the WSHP application?

The AppController is a field-installed controller that mounts on a water source heat pump. The internal application programming provides optimum energy efficiency. This controller allows the water source heat pump to run in 100% stand-alone mode, communicate to an i-Vu® Open Control System, or a BACnet Third Party Building Automation System (BAS).

NOTE The WSHP for AppController application does NOT support Metric units.

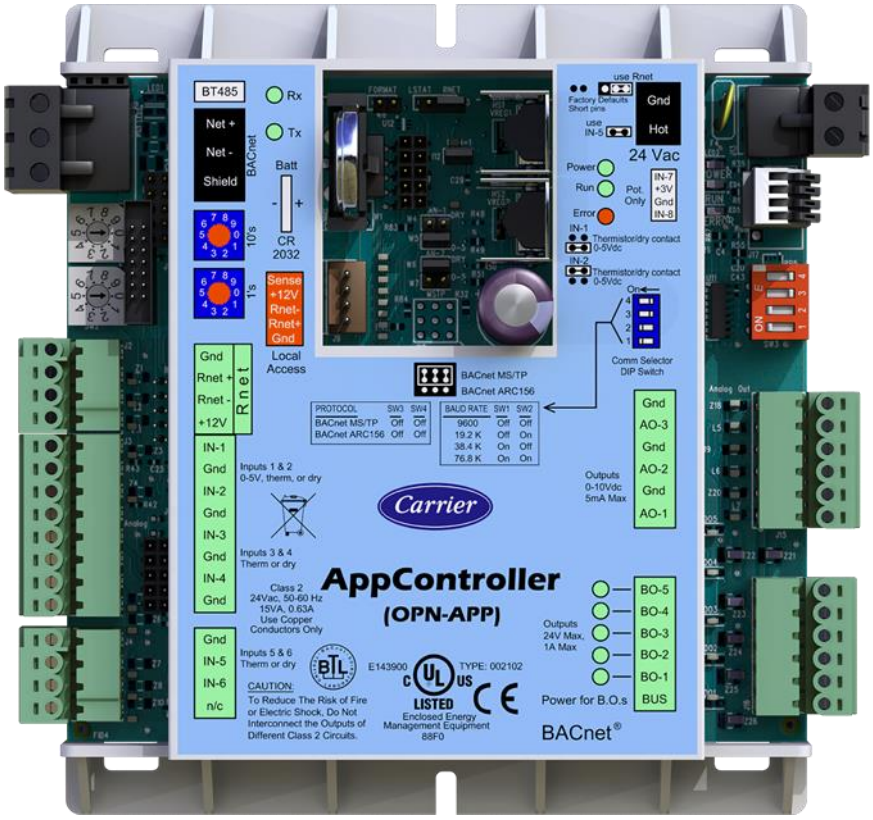

CARRIER CORPORATION ©2021
All rights reserved

Specifications

Power	24 Vac ±10%, 50–60 Hz 20 VA power consumption 26 Vdc (25 V min, 30 V max) Single Class 2 source only, 100 VA or less
BACnet Port	For communication with the controller network using BACnet ARC156 (156 kbps) or BACnet MS/TP (9600 bps – 76.8 kbps)
Rnet port	• Supports up to 10 wireless and/or ZS sensors, and one Equipment Touch or TruVu™ ET Display • Supplies 12 Vdc/210 mA power to the Rnet at an ambient temperature of 77°F (25°C) with a 24 Vac nominal power source. NOTE Ambient temperature and power source fluctuations may reduce the power supplied by the Rnet port. **NOTE** If the total power required by the sensors on the Rnet exceeds the power supplied by the Rnet port, use an external power source. The Wireless Adapter, Equipment Touch, or TruVu™ ET Display must be powered by an external power source. See the specifications in each device's Installation and Start-up Guide to determine the power required.
Local Access port	For system start-up and troubleshooting using Field Assistant
Inputs	6 inputs configurable for thermistor or dry contact. 1 and 2 are also configurable for 0–5 Vdc sensors. **NOTES** • 7 and 8 are unused. • Input 5 has a maximum temperature of 140°F (60°C).
Input resolution	10 bit A/D
Analog outputs	3 analog outputs, 0–10 Vdc (5 mA max)
Binary outputs	5 binary outputs, dry relay contacts rated at 1 A max. @ 24 Vac/Vdc. Configured normally open
Output resolution	8 bit A/D, using filtered PWM
Real time clock	Battery-backed real time clock keeps track of time in the event of a power failure
Battery	10-year Lithium CR2032 battery retains the following data for a maximum of 10,000 hours during power outages: control programs, graphics, editable properties, schedules, and trends.
Protection	Built-in surge and transient protection for power and communications in compliance with EN61000-6-1. Incoming power and network connections are protected by non-replaceable internal solid-state polyswitches that reset themselves when the condition that causes a fault returns to normal. The power, network, input, and output connections are also protected against transient excess voltage/surge events lasting no more than 10 msec. **CAUTION** To protect against large electrical surges on serial EIA-485 networks, place a PROT485 at each place wire enters or exits the building.

CARRIER CORPORATION ©2021
All rights reserved

Status indicators	LEDs indicate status of communications, running, errors, and power.
Environmental operating range	0 to 130°F (-18 to 54°C), 0 to 90% relative humidity, non-condensing
Storage temperature range	-24 to 140°F (-30 to 60°C), 0 to 90% relative humidity, non-condensing
Physical	Rugged GE C2950HF Cycoloy plastic
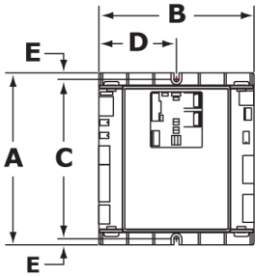	
Overall dimensions	A: 5-5/8 in. (14.3 cm) B: 5-1/8 in. (13 cm)
Mounting dimensions	C: 5-1/4 in. (13.3 cm) D: 2-9/16 in. (6.5 cm) E: 3/16 in. (.5 cm)
Panel depth	2 in. (5.1 cm)
Weight	0.44 lbs. (0.20 kg)
BACnet support	Conforms to the BACnet Advanced Application Controller (B-AAC) Standard Device Profile as defined in ANSI/ASHRAE Standard 135-2012 (BACnet) Annex L, Protocol Revision 9
Listed by	UL-916 (PAZX), cUL-916 (PAZX7), FCC Part 15-Subpart B-Class A, CE

Safety considerations

WARNING Disconnect electrical power to the controller before wiring it. Failure to follow this warning could cause electrical shock, personal injury, or damage to the controller.

CARRIER CORPORATION ©2021
All rights reserved

Installing the controller

1. *Mount the controller* (page 4).
2. *Wire the controller for power* (page 5).
3. *Set the controller's address* (page 6).
4. *Wire the controller to the BACnet MS/TP or BACnet ARC156 network* (page 6).
5. *Wire inputs and outputs* (page 7).
6. *Wire sensors to the controller* (page 13).
7. *Wire equipment to outputs* (page 21).

Mounting the controller

WARNING

When you handle the controller:
- Do not contaminate the printed circuit board with fingerprints, moisture, or any foreign material.
- Do not touch components or leads.
- Handle the board by its edges.
- Isolate from high voltage or electrostatic discharge.
- Ensure that you are properly grounded.

Screw the controller into an enclosed panel using the mounting slots on the coverplate. Leave about 2 in. (5 cm) on each side of the controller for wiring. Mounting hole dimensions 5 9/16" (14.1 cm) between mounting slot center lines.

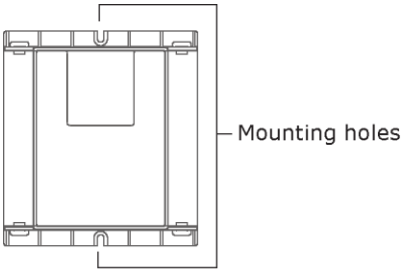

CARRIER CORPORATION ©2021
All rights reserved

Wiring the controller for power

WARNING Do not apply line voltage (mains voltage) to the controller's ports and terminals.

CAUTIONS

- The controller is powered by a Class 2 power source. Take appropriate isolation measures when mounting it in a control panel where non-Class 2 circuits are present.
- Carrier controllers can share a power supply as long as you:
  - Maintain the same polarity.
  - Use the power supply only for Carrier controllers.

To wire for power

1. Remove power from the power supply.
2. Pull the screw terminal connector from the controller's power terminals labeled **Gnd** and **Hot**.
3. Connect the transformer wires to the screw terminal connector.

   NOTE If using a grounded transformer, connect the ungrounded lead to the **Hot** terminal to avoid damaging the transformer.
4. Apply power to the power supply.
5. Measure the voltage at the controller’s power input terminals to verify that the voltage is within the operating range of 21.6–26.4 Vac.
6. Insert the screw terminal connector into the controller's power terminals.
7. Verify that the **Power** LED is on and the **Run** LED is blinking.

CARRIER CORPORATION ©2021
All rights reserved

Addressing the controller

You must give the controller an address that is unique on the network. You can address the controller before or after you wire it for power.

1. If the controller has been wired for power, pull the screw terminal connector from the controller power terminals labeled **Gnd** and **Hot**. The controller reads the address each time you apply power to it.
2. Using the rotary switches, set the controller address. Set the **Tens** (**10's**) switch to the tens digit of the address, and set the **Ones** (**1's**) switch to the ones digit.

   EXAMPLE If the controller's address is 25, point the arrow on the **Tens** (**10's**) switch to 2 and the arrow on the **Ones** (**1's**) switch to 5.

   10's

   1's

   CAUTION The factory default setting is **00** and must be changed to successfully install your controller.

Wiring for communications

The controller communicates using BACnet on the following types of network segments:

- MS/TP communicating at 9600 bps, 19.2 kbps, 38.4 kbps, or 76.8 kbps
- ARC156 communicating at 156 kbps

NOTE For more networking details, see the *Open Controller Network Wiring Installation Guide*.

Wiring specifications for BACnet MS/TP and ARC156

Cable:	22 AWG or 24 AWG, low-capacitance, twisted, stranded, shielded copper wire
Maximum length:	2000 feet (610 meters)

WARNING Do not apply line voltage (mains voltage) to the controller's ports and terminals.

CARRIER CORPORATION ©2021
All rights reserved

To wire the controller to the BACnet network

1. Pull the screw terminal connector from the controller's power terminals labeled **24 Vac** and **Gnd** (**Return**).
2. Check the communications wiring for shorts and grounds.
3. Connect the communications wiring to the controller's screw terminals labeled **Net +**, **Net -**, and **Shield**.

   NOTE Use the same polarity throughout the network segment.
4. Set the communication type and baud rate.

For...	Set Communications Selection jumper to...	Set DIP switches 1 and 2 to...	Set DIP switches 3 and 4 to...
MS/TP	**BACnet MS/TP**	The appropriate baud rate. See the **MS/TP Baud** diagram on the controller.	Off/Off
ARC156	**BACnet ARC156**	N/A. Baud rate will be 156 kbps regardless of the DIP switch settings.	Off/Off

   NOTE Use the same baud rate for all controllers on the network segment.
5. Wire the controllers on a BACnet MS/TP or BACnet ARC156 network segment in a daisy-chain configuration.
6. If the controller is at either end of a network segment, connect a BT485 to the controller.
7. Insert the power screw terminal connector into the controller's power terminals.
8. Verify communication with the network by viewing a Module Status report in the i-Vu/Field Assistant interface.

Wiring inputs and outputs

WARNING Do not apply line voltage (mains voltage) to the controller's ports and terminals.

See *Appendix A* (page 44) to print a blank wire list.

Inputs and outputs table

I/O	Type	I/O Terminal	Gnd Terminal	Point Name/ Function	Hardware/ Signal	Jumper Position of Pins
Zone Temp/ Zone Temp	AI	Rnet	Gnd	Space Temperature - Prime Variable	Communicating	N/A
ZS Zone CO2	ASVI	Rnet	Gnd	Space Air Quality communicating sensor	Communicating	N/A
Zone Humidity	ASVI	Rnet	Gnd	Space Humidity communicating sensor	Communicating	N/A
Zone Temp	ASVI	Rnet	Gnd	Space Temperature communicating sensor	Communicating	N/A
RH Sensor	AI	IN-1	2 - Gnd	Space Relative Humidity	0-5 Vdc	IN-1 Bottom

CARRIER CORPORATION ©2021
All rights reserved

I/O	Type	I/O Terminal	Gnd Terminal	Point Name/ Function	Hardware/ Signal	Jumper Position of Pins
CO_2 Sensor	AI	IN-1	2 - Gnd	Indoor Air Quality	0-5 Vdc	IN-1 Bottom
SAT Sensor	AI	IN-2	4 - Gnd	Supply Air Temperature	10K Thermistor	IN-2 Top
Source Water Temperature	AI	IN-3	6 - Gnd	Leaving Source Water Temp	10K Thermistor	N/A
Overflow Contact	AI	IN-4	8 - Gnd	Condensate Overflow Switch	10K Thermistor	N/A
Fire / Smk Detect Input	BI	IN-5	1 - Gnd	Fire/Smoke Detector	Dry Contact	N/A
Input Channel #6	BI	IN-6	1 - Gnd	Window Contact Disable / Remote Occupancy Contact	Dry Contact	N/A
OA Damper	AO	AO-1*	2 - Gnd	Outside Air Damper	0-10 Vdc 2-10 Vdc	N/A
Aux Heat	AO	AO-2	4 - Gnd	Aux Heat - Modulating (HW Valve/Water Econ)	0-10 Vdc 2-10 Vdc	N/A
Isolation Valve	AO	AO-3	6 - Gnd	Modulating Isolation Valve	0-10 Vdc 2-10 Vdc	N/A
Fan G	BO	BO-1*	1 - Pwr	Fan On/Low Speed Fan On	Relay	N/A
Fan High Spd	BO	BO-2	1 - Pwr	Fan High Speed (2-speed only) Fan On/Off (Single Speed)	Relay	N/A
W2	BO	BO-3*#	1 - Pwr	W2-Aux Heat (2-position Electric)	Relay	N/A
Isolation Valve	BO	BO-3*#	1 - Pwr	Isolation Valve (2-position)	Relay	N/A
Y2	BO	BO-3*#	1 - Pwr	Y2-Compressor	Relay	N/A
Y1	BO	BO-4	1 - Pwr	Y1-Compressor	Relay	N/A
O/B	BO	BO-5	1 - Pwr	Reversing Valve (B/O)	Relay	N/A

Legend

AI - Analog Input **AO** - Analog Output

BI - Digital Input **BO** - Digital Output

* These outputs are configurable.

Isolation valve, W2 Aux Heat, and Y2 Compressor Functions are mutually exclusive of each other and cannot be configured to operate at the same time.

NOTE Connect ZS sensors to the Rnet port.

CARRIER CORPORATION ©2021
All rights reserved

Input wiring specifications

Input	Maximum length	Minimum gauge	Shielding
0–5 Vdc	500 feet (152 meters)	22 AWG	100 feet (30.4 meters) unshielded 100 - 500 feet shielded
Thermistor Dry contact Pulse counter TLO	500 feet (152 meters)	22 AWG	100 feet (30.4 meters) unshielded 100 - 500 feet shielded
ZS sensors Wireless Adapter for wireless sensors Equipment Touch TruVu™ ET Display	See *Wiring devices to the controller's Rnet port* (page 13).		

Inputs

The controller has 6 inputs that accept the following signal types.

These inputs...	Support this signal type...	Description
All	Thermistor	Precon type 2 (10 kOhm at 77°F/25°C) Input voltage for IN-5: 1 to 2.52 Vdc Input voltage for all other inputs: 0.33 to 2.52 Vdc
All	Dry contact	A 3.3 Vdc wetting voltage detects contact position, resulting in a 0.3 mA maximum sense current when the contacts are closed.
IN-1, IN-2	0–5 Vdc	The input impedance of the controller is approximately 30 kOhm.
All	Pulse counter	Pulse counting up to 10 pulses per second. Minimum pulse width (on or off time) required for each pulse is 50 msec.

CARRIER CORPORATION ©2021
All rights reserved

Binary outputs

The controller has 5 binary outputs. You can connect each output to a maximum of 24 Vac/26 Vdc. Each output is a dry contact rated at 1 A, 24 V maximum and is normally open.

To size output wiring, consider the following:

- Total loop distance from the power supply to the controller, and then to the controlled device

  NOTE Include the total distance of actual wire. For 2-conductor wires, this is twice the cable length.
- Acceptable voltage drop in the wire from the controller to the controlled device
- Resistance (Ohms) of the chosen wire gauge
- Maximum current (Amps) the controlled device requires to operate

Analog outputs

The controller has 3 analog outputs that support voltage. The controlled device must share the same ground as the controller and have the following input impedance:

0–10 Vdc	Minimum impedance 2000 Ohms, max 5 mA **NOTE** Ohm's law: -10V/.005a = 2000 Ohms

CARRIER CORPORATION ©2021
All rights reserved

To wire inputs and outputs

Pull the screw terminal connector from the controller's power terminals labeled **Gnd** and **Hot**.

1 Connect the input wiring to the screw terminals on the controller.

NOTES

- Connect the shield wire to the **GND** terminal with the ground wire.
- **IN-5** and **IN-6** share the **GND** terminal above **IN-5**.

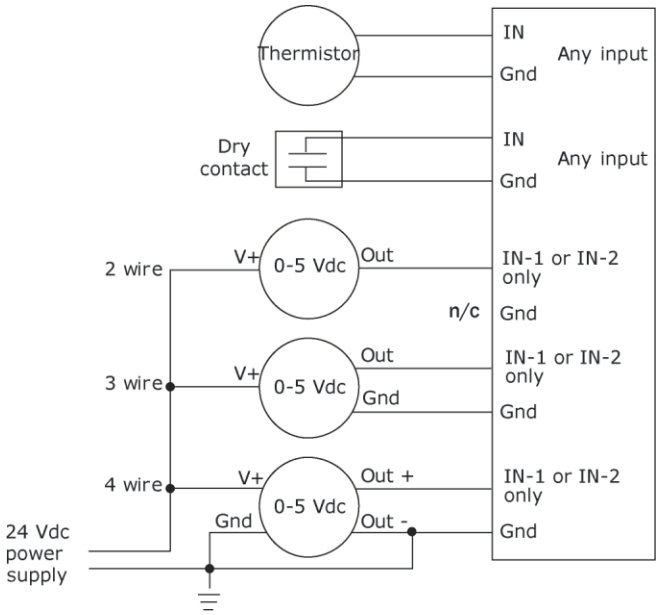

2 Set the appropriate jumpers on the controller.

To use...	For...	
IN-1	Thermistor	Set jumpers **IN-1** to the Therm position.
IN-1	0–5 Vdc	Set jumpers **IN-1** to the 0-5 Vdc position.
IN-2	Thermistor/ Dry contact	Set jumpers **IN-2** to the Thermistor/Dry contact position.
All	Thermistor Dry contact	Verify the **IN-5** jumper is on.
Rnet Port	ZS sensors Wireless Adapter for wireless sensors Equipment Touch TruVu™ ET Display	Set the **Rnet** jumper to **Rnet**.

CARRIER CORPORATION ©2021
All rights reserved

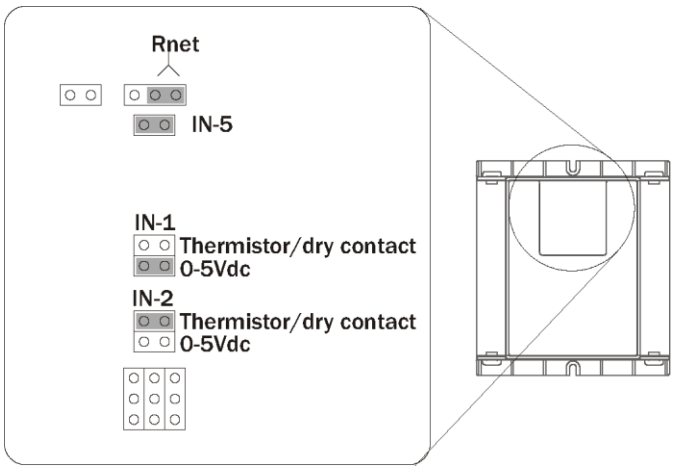

3 Connect the analog output wiring to the screw terminals on the controller and to the controlled device.

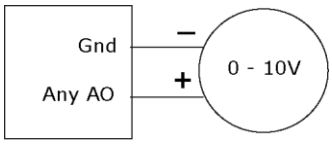

4 Connect the binary output wiring to the screw terminals on the controller and to the controlled device.

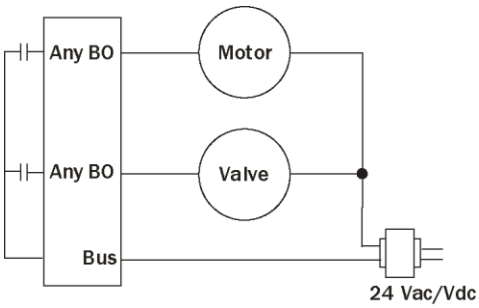

5 Insert the power screw terminal connector into the controller's power terminals.

CARRIER CORPORATION ©2021
All rights reserved

Wiring sensors to the controller

You can wire the following sensors to the controller:

- *ZS sensors* (page 14, page 13)
- *Wireless Adapter for the Wireless sensors* (page 14, page 13)
- *CO_2 sensor* (page 19)
- *Relative Humidity sensor* (page 20)

NOTE This document gives instructions for wiring the sensors to the controller. For mounting and wiring the sensors, see the *Carrier Sensors Installation Guide*.

*For detailed instructions, see the applicable *Installation Guide* and *Application Guide* for the ZS or Wireless line of sensors.

WARNING Disconnect electrical power to the controller before wiring it. Failure to follow this warning could cause electrical shock, personal injury, or damage to the controller.

CAUTION

- Do not run sensor or relay wires in the same conduit or raceway with Class 1 AC or DC service wiring.
- Do not abrade, cut, or nick the outer jacket of the cable.
- Do not pull or draw cable with a force that may harm the physical or electrical properties.
- Avoid splices in any control wiring.

Wiring devices to the controller's Rnet port

The Rnet communicates at a rate of 115 kbps and should be wired in a daisy-chain configuration.

Supports up to

- 10 wireless and/or ZS sensors (5 per control program)
- One Equipment Touch
- One TruVu™ ET Display

NOTE ZS sensors, a Wireless Adapter, and an Equipment Touch can share the Rnet, but not SPT sensors.

CARRIER CORPORATION ©2021
All rights reserved

Rnet wiring specifications

NOTE Use the specified type of wire and cable for maximum signal integrity.

Description	4 conductor, shielded or unshielded, CMP, plenum rated cable
Conductor	22 AWG (7x0096) bare copper if Rnet has only sensors
Maximum length	500 feet (152 meters)
Insulation	Low-smoke PVC (or equivalent)
Color Code	Black, white, green, red
Shielding	If shielded, Aluminum/Mylar shield (100% coverage) with TC drain wire, terminated at controller
UL temperature rating	32–167°F (0–75°C)
Voltage	300 Vac, power limited
Listing	UL: NEC CL2P, or better

To wire ZS sensors to the controller

ZS Sensors are thermistor-based temperature sensors that may optionally sense humidity, CO_2, or VOC. ZS Sensors are wired to the Rnet port on i-Vu® Open controllers. You can use the following ZS sensors:

- ZS Standard
- ZS Plus
- ZS Pro
- ZS Pro-F

NOTES

- The ZS CO2 model uses 190 mA during sample period. Use auxiliary 12 Vdc, unless it is the only device on the Rnet port.
- A control program can use no more than 5 ZS Sensors
- SPT sensors cannot share the Rnet with other devices.
- For detailed instructions, see the *ZS Sensor Installation Guide*.

CARRIER CORPORATION ©2021
All rights reserved

1 Remove power from the controller.

2 Partially cut, then bend and pull off the outer jacket of the Rnet cable(s). Do not nick the inner insulation. Strip about .25 inch (.6 cm) of the inner insulation from each wire.

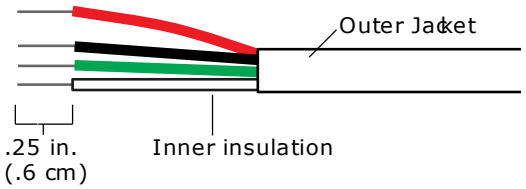

3 Wire each terminal on the sensor to the same terminal on the controller. See diagram below.

NOTE Carrier recommends that you use the following Rnet wiring scheme:

Connect this wire...	To this terminal...
Red	+12V
Black	Rnet-
White	Rnet+
Green	Gnd

4 Apply power to the controller.

To wire the Wireless Adapter for wireless sensors

WARNING Do not apply line voltage (mains voltage) to the Wireless Adapter.

The Carrier wireless sensors are available in 868, 902, and 928 MHz radio frequency. The sensors are thermistor-based temperature sensors that may optionally sense humidity.

Wireless sensors communicate through a Wireless Adapter, which is wired to the Rnet port of the controller.

REQUIREMENTS

- A v6.5 or later i-Vu/Field Assistant system
- v6-xx-xxx or later controller drivers

To configure the control program for the desired user interaction with the sensor, see the *Wireless Sensors Application Guide*. For detailed instructions, see the *Wireless Sensors Installation Guide*.

CARRIER CORPORATION ©2021
All rights reserved

To wire, power, and mount the Wireless Adapter

NOTES

- The Wireless Adapter requires a 24 Vac power supply. It is not powered by the Rnet.
- If the Wireless Adapter will be:
  - Daisy-chained on the Rnet with ZS sensors, an Equipment Touch, or TruVu™ ET Displayuse the standard 4-conductor Rnet wiring.
  - The only device on the Rnet, you can use a 3-conductor cable instead of the standard 4-conductor Rnet cable.

1. Turn off the power to the controller that the Wireless Adapter will be wired to.
2. Partially cut, then bend and pull off the outer jacket of the Rnet cable(s). Do not nick the inner insulation.

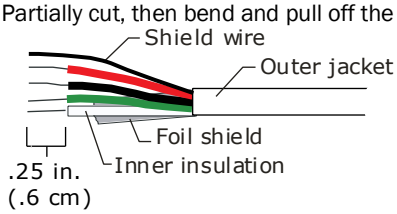

3. Strip about 0.25 inch (0.6 cm) of the inner insulation from each wire.
4. Wire the **Rnet +**, **Rnet -**, and **Gnd** terminals on the controller's **Rnet** port to the terminals of the same name on the Wireless Adapter's Rnet connector.

   NOTE If using shielded wire, connect the shield wire and the ground wire to the **Gnd** terminal.

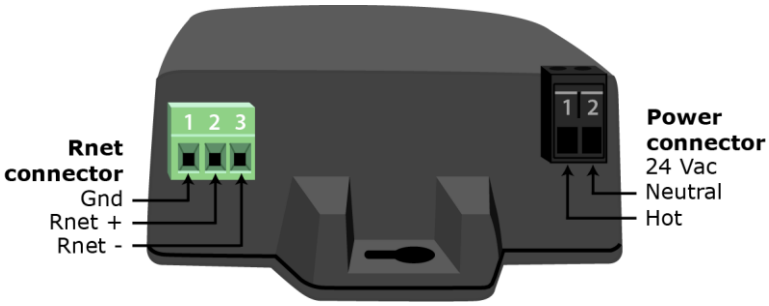

5. Wire the 24 Vac external power supply to the Wireless Adapter's power connector.
6. Mount the Wireless Adapter by inserting 2 screws through the mounting tabs on each end of the Wireless Adapter.
7. Apply power to the external power supply.
8. Verify that the LED on top of the Wireless Adapter is blinking. See "LED" below.
9. Turn on the controller's power.

CARRIER CORPORATION ©2021
All rights reserved

LED

The blue LED on the top of the Wireless Adapter indicates the following:

If the LED is...	Then the device...
Off	Is not powered or there is a problem.
Blinking	Is working properly.
Steadily on	Has a problem. Do one of the following: • Cycle power to the device. • Insert a small screwdriver or paper clip into the hole next to the LED to reboot the device.

To wire an Equipment Touch to the controller

NOTES

- The Equipment Touch requires a 24 Vac power supply. It is not powered by the Rnet.
- If the Equipment Touch will be:
  - Daisy-chained on the Rnet with ZS sensors or a Wireless Adapter, use the standard 4-conductor Rnet wiring and follow the wiring instructions *To wire ZS sensors to the controller* (page 14).
  - The only device on the Rnet, you can use a 2-conductor cable instead of the standard 4-conductor Rnet cable and follow the instructions below.
- For complete Equipment Touch installation instructions including wiring diagrams, see the *Equipment Touch Installation and Setup Guide.*

CAUTION The controller can share a power supply with the Carrier controller as long as:

- The power supply is AC power.
- You maintain the same polarity.
- You use the power source only for Carrier controllers.

1. Turn **off** the controller's power.
2. Partially cut, then bend and pull off the outer jacket of the cable. Do not nick the inner insulation.

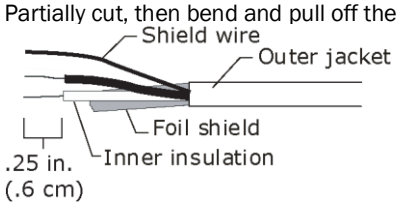

3. Strip about 0.25 inch (0.6 cm) of the inner insulation from each wire.
4. Wire the controller's **Rnet+** and **Rnet-** terminals to the terminals of the same name on the Equipment Touch's connector.

   NOTE If using shielded wire, connect the shield wire and the ground wire to the **Gnd** terminal.
5. Turn **on** the controller's power.
6. Turn on the Equipment Touch.

CARRIER CORPORATION ©2021
All rights reserved

To wire the TruVu™ ET Display

WARNING Do not apply line voltage (main) - 24 Vdc power only.

Wiring power

Wire the TruVu™ ET Display **24V DC** connector to the 24 Vdc power supply using 2-conductor 18 AWG wire. Maximum distance 100 feet (30 meters).

CAUTION The TruVu™ ET Display can share a power supply with the Carrier controller as long as:

- The power supply is DC power.
- You maintain the same polarity.
- You use the power source only for Carrier controllers.

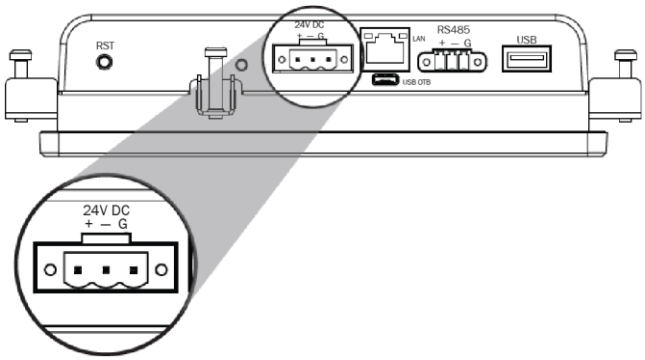

Wiring communication

1 Turn off the controller's power.

2 Wire the TruVu™ ET Display's **RS485** connector to the controller's **Rnet** port, **G** to **Gnd**, **+** to **Rnet +**, **-** to **Rnet -** using 2-conductor 22 AWG wire with a maximum distance of 500 feet (152 meters).

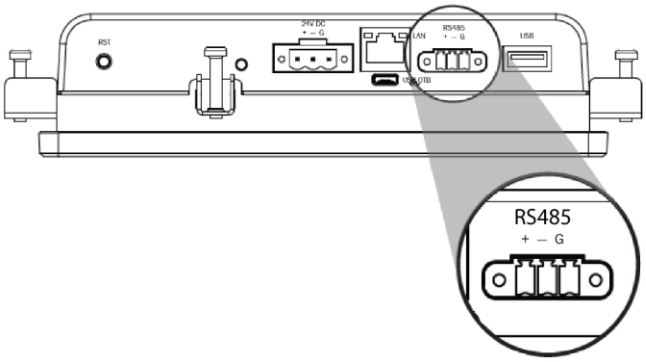

3 Turn on the controller's power.

For complete TruVu™ ET Display installation instructions, see the *TruVu™ ET Display Installation and Start-up Guide.*

CARRIER CORPORATION ©2021
All rights reserved

Wiring a CO2 sensor

Part #33ZCSPTCO2LCD-01 (Display model)
Part #33ZCSPTCO2-01 (No display)

Part #33ZCT55CO2 (No display)
Part #33ZCT56CO2 (No display)

A CO_2 sensor monitors carbon dioxide levels. As CO_2 levels increase, the controller adjusts the outside air dampers to increase ventilation and improve indoor air quality. A CO_2 sensor can be wall-mounted or mounted in a return air duct. Duct installation requires an Aspirator Box Accessory (Part #33ZCASPCO2).

The sensor has a range of 0–2000 ppm. The CO_2 sensor's power requirements exceed what is available. Provide a dedicated 24Vac transformer or DC power supply.

Wiring specifications

Cable from sensor to controller:	If <100 ft (30.5 meters) If >100 ft (30.5 meters)	22 AWG, unshielded 22 AWG, shielded
Maximum length:	500 feet (152 meters)	

To wire the CO2 sensor to the controller

1. Wire the sensor to the controller.
2. Verify IN-1 jumper is in the 0-5 Vdc position.
3. Install a field-supplied dedicated 24 Vac transformer or DC power supply.
4. Apply power and verify sensor readings.

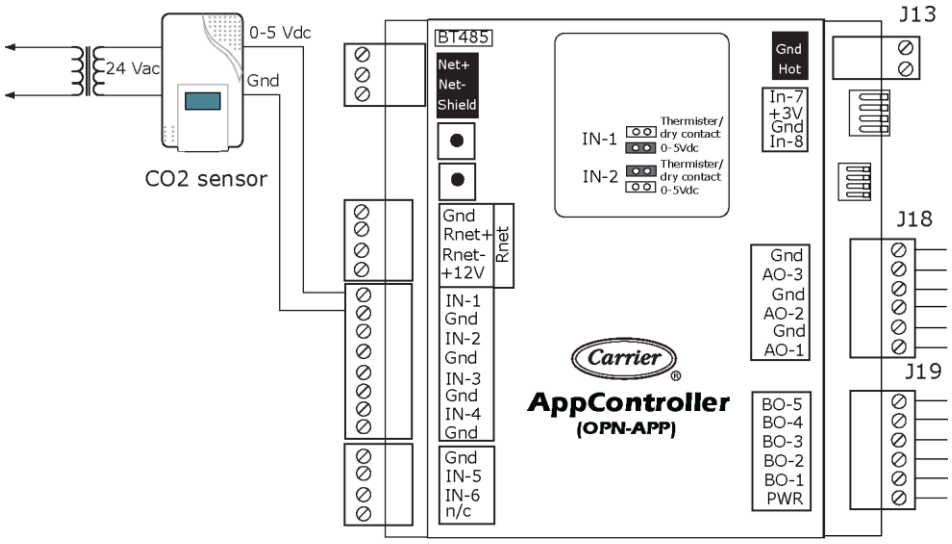

CARRIER CORPORATION ©2021
All rights reserved

Wiring a relative humidity sensor

Wall and duct sensor - Part #33ZCSENSRH-02

The relative humidity (RH) sensor may be used for humidity control (dehumidification) when applied to a fan coil.

NOTE You cannot use a relative humidity sensor when using both a CO_2 and OAQ sensor on the controller.

Wiring specifications

Cable from sensor to controller:	If <100 ft (30.5 meters) If >100 ft (30.5 meters)	22 AWG, unshielded 22 AWG, shielded
Maximum length:	500 feet (152 meters)	

To wire the RH sensor to the controller

1. Strip the outer jacket from the cable for at least 4 inches (10.2 cm). Strip .25 inch (.6 cm) of insulation from each wire.
2. Wire the sensor to the controller. See diagram below.
3. Sensor may be terminated at Input 1.
4. Apply power and verify sensor readings.

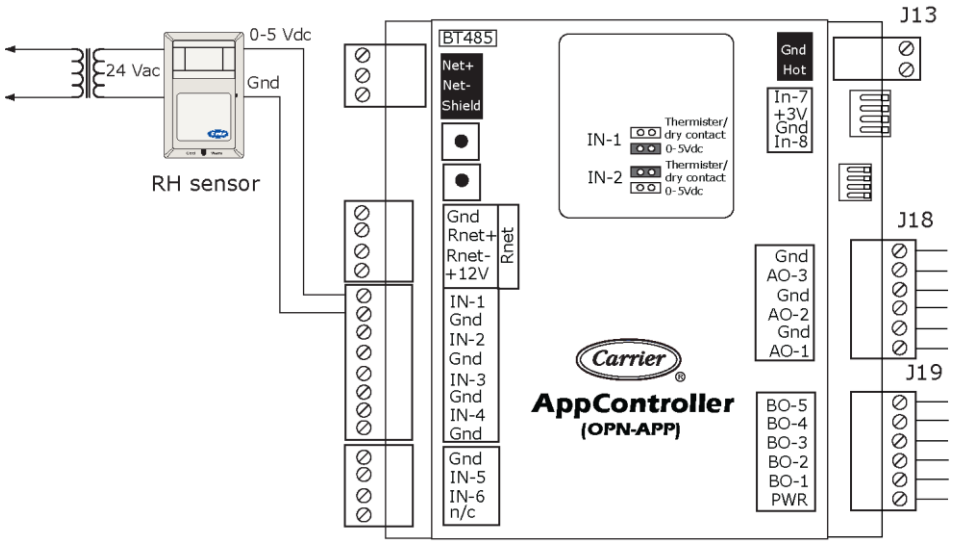

CARRIER CORPORATION ©2021
All rights reserved

Wiring equipment to outputs

Use the following wiring specifications and diagrams to wire equipment to the controller's outputs:

- *Single speed fan relay* (page 22)
- *2-speed fan with discrete relay control* (page 22)
- *Relay board #E025-71308201* (page 23)
- *Heating: 2-position or electric* (page 23)
- *Heating: modulating valve* (page 24)
- *1-stage of compression* (page 24)
- *2 stages of compression* (page 25)
- *Reversing valve* (page 25)
- *Outside air ventilation damper (2-position or DCV)* (page 26)
- *Isolation modulating valve* (page 26)
- *Isolation 2-position valve* (page 27)

Wiring specifications

To size output wiring, consider the following:

- Total loop distance from the power supply to the controller, and then to the controlled device

  NOTE Include the total distance of actual wire. For 2-conductor wires, this is twice the cable length.
- Acceptable voltage drop in the wire from the controller to the controlled device
- Resistance (Ohms) of the chosen wire gauge
- Maximum current (Amps) the controlled device requires to operate

CARRIER CORPORATION ©2021
All rights reserved

Single speed fan relay

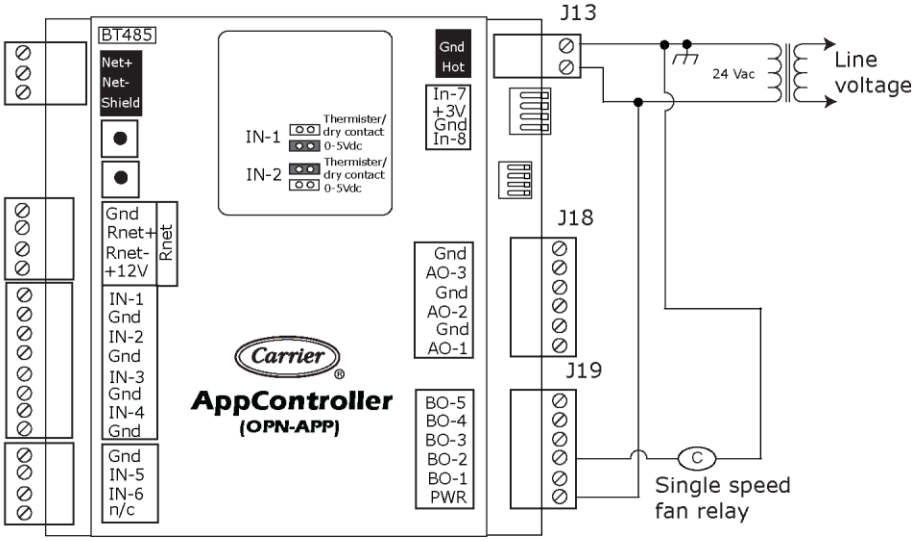

NOTE Configure **Fan (G) Output Type** as **Fan Low**.

2-speed fan with discrete relay control

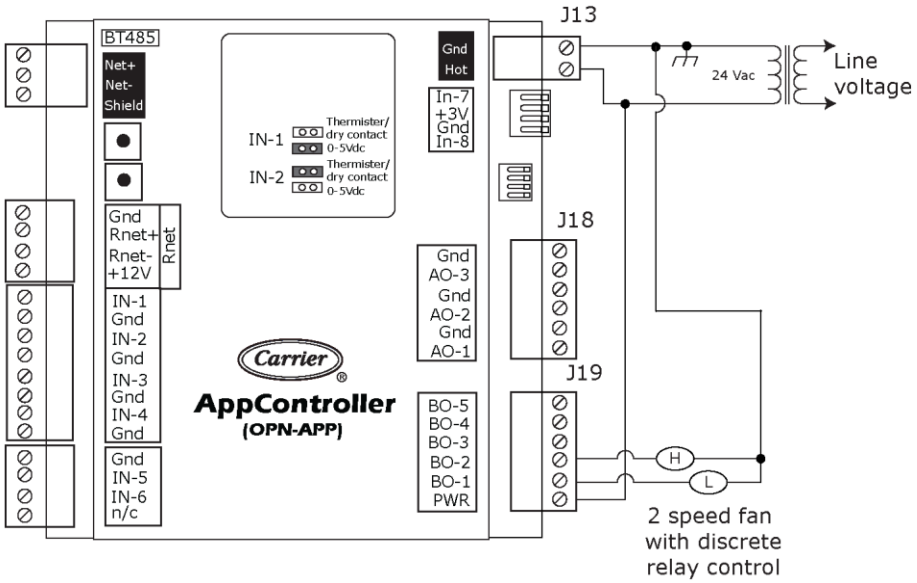

NOTE Configure **Fan (G) Output Type** as **Fan Low**.

CARRIER CORPORATION ©2021
All rights reserved

Relay board #E025-71308201

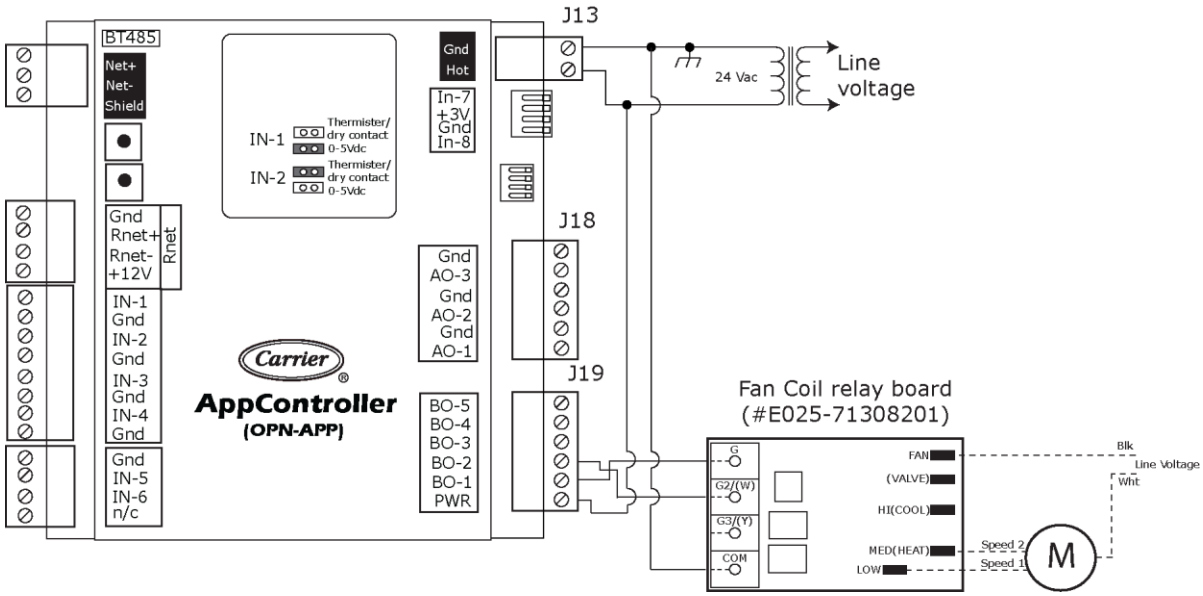

NOTE Configure **Fan (G) Output Type** as **Fan On**.

Aux heating: 2-position or electric

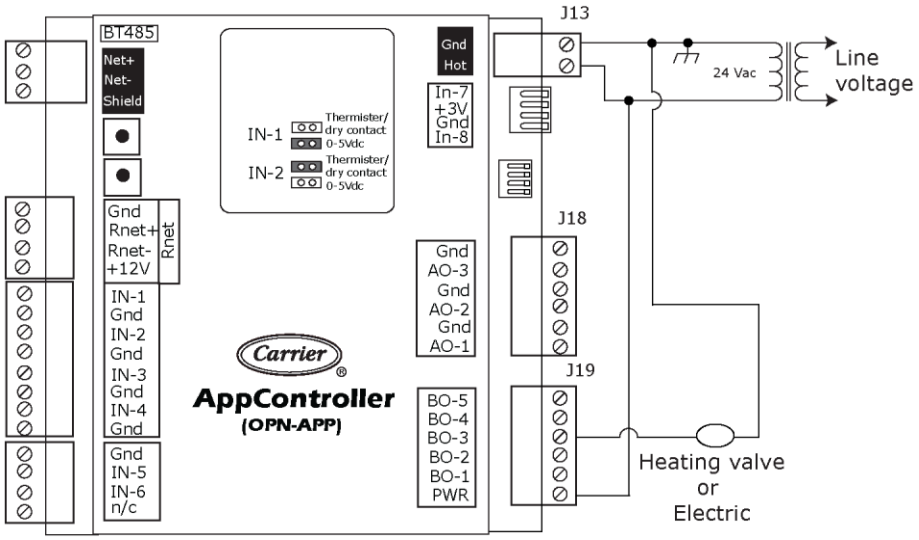

CARRIER CORPORATION ©2021
All rights reserved

Aux heating: Modulating valve

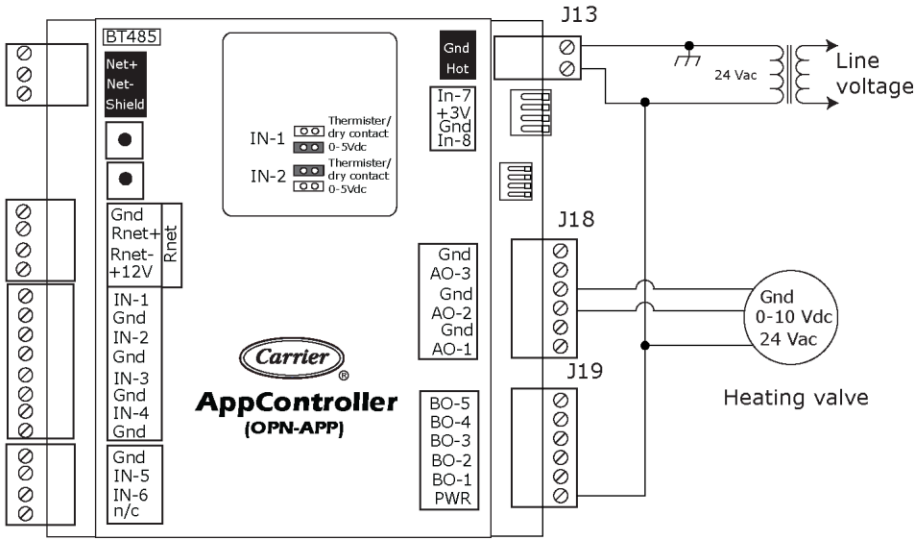

1 stage of compression

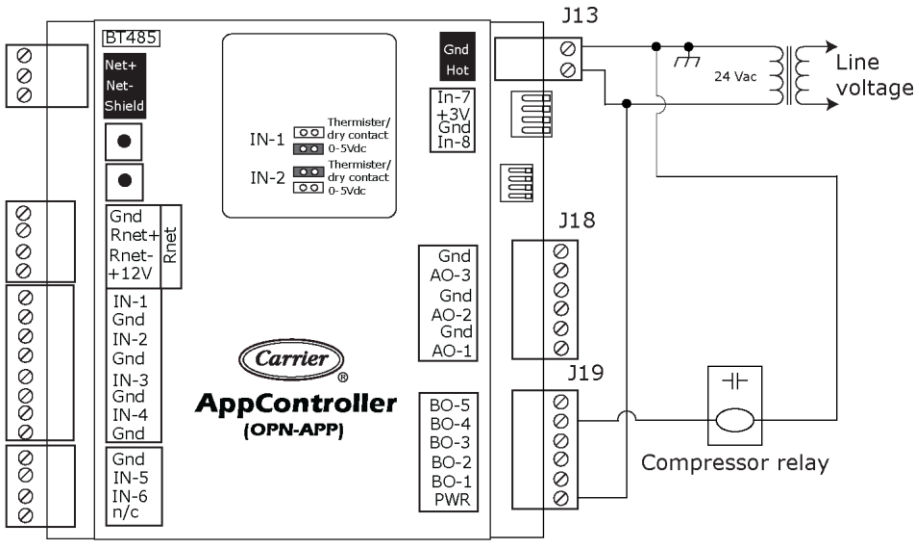

CARRIER CORPORATION ©2021
All rights reserved

2 stages of compression

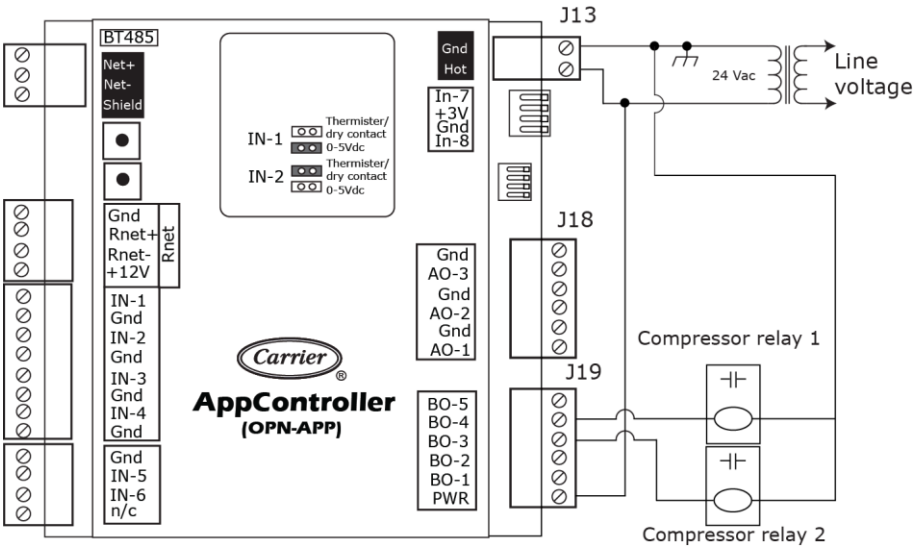

Reversing valve

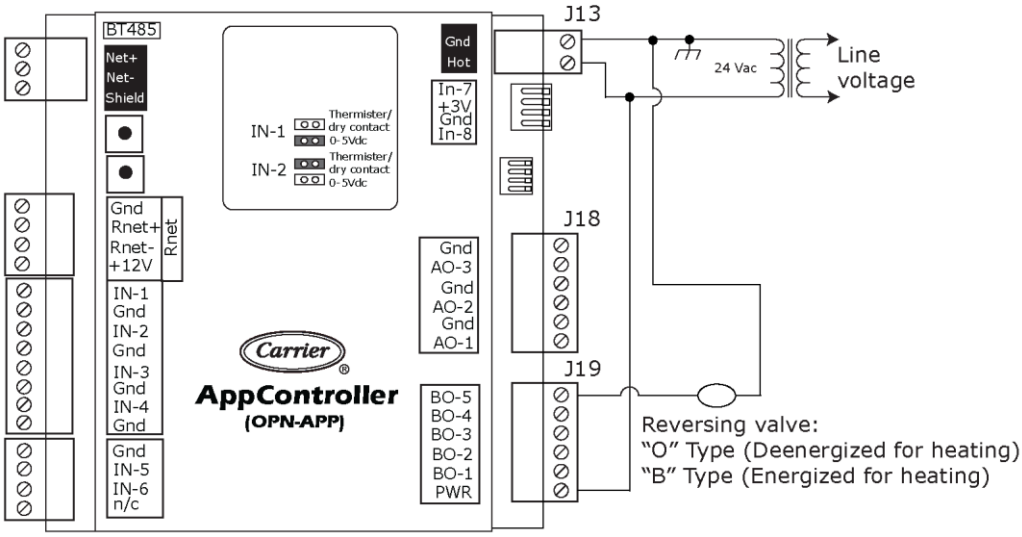

CARRIER CORPORATION ©2021
All rights reserved

Outdoor air ventilation damper (2-position or DCV)

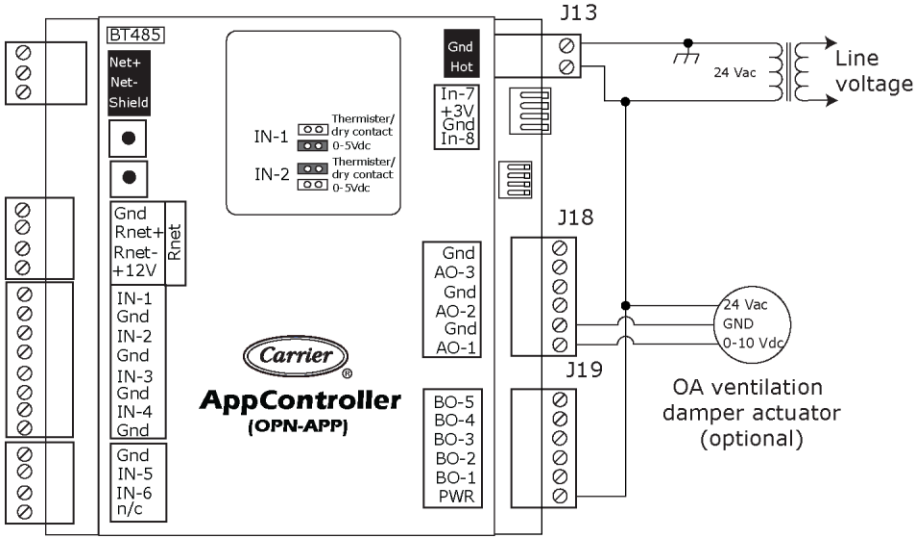

Isolation modulating valve

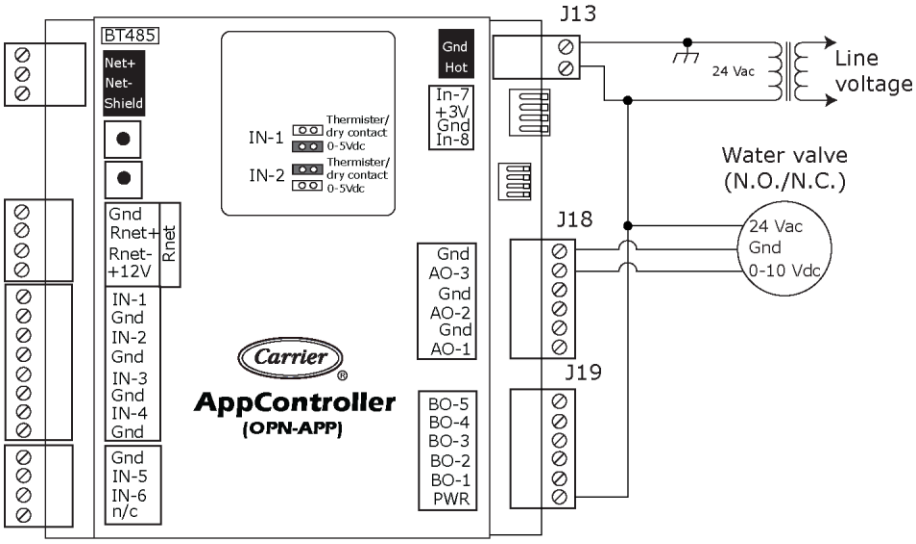

CARRIER CORPORATION ©2021
All rights reserved

2-position isolation valve

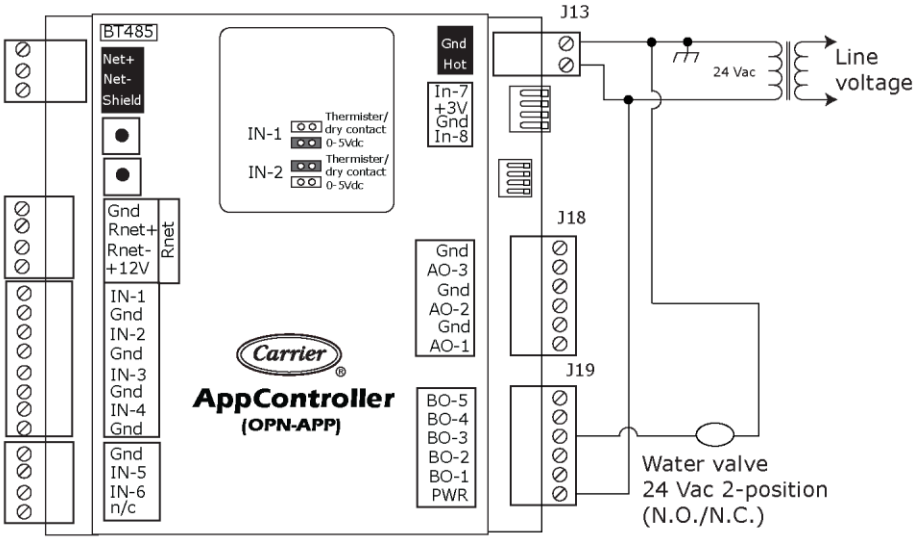

NOTE 2-position isolation valve is only available if **Auxiliary Heat Type** is **None** or **Modulating**.

CARRIER CORPORATION ©2021
All rights reserved

Start-up

Use one of the following interfaces to start up, access information, read sensor values, and test the controller.

This interface...	Provides a...
Field Assistant application - Runs on a laptop that connects to controller's Local Access port [1]	Temporary interface
Equipment Touch device - Connects to controller's Rnet port [2]	Temporary or permanent interface
i-Vu® application Available for BACnet systems only	Permanent interface
System Touch device Available only for BACnet MS/TP systems. Wire to a BACnet MS/TP network connector and a 24 Vac power supply [3]	Temporary or permanent interface

[1] Requires a USB Link (Part #USB-L).
[2] See the *Equipment Touch Installation and Setup Guide* for detailed instructions.
[3] See the *System Touch Installation and Setup Guide* for detailed instructions.

CAUTION If multiple controllers share power but polarity was not maintained when they were wired, the difference between the controller's ground and the computer's AC power ground could damage the USB Link and the controller. If you are not sure of the wiring polarity, use a USB isolator between the computer and the USB Link. Purchase a USB isolator online from a third-party manufacturer.

Service Test

Navigation: i-Vu / Field Assistant: **Properties** > **Control Program** > **Configuration** > **Service Configuration** > **Service Test**

You can use **Service Test** to verify proper operation of cooling, heating, auxiliary heat, fan, and OA damper. We highly recommend using **Service Test** at initial system start-up and during troubleshooting. See *Appendix C: Points/Properties* (page 46) for more information.

Service Test differs from normal operation as follows:

- Outdoor air temperature limits for cooling and heating are ignored.
- The configured **Fan Off Delay** and minimum/maximum run times are ignored. A 10-second fan off delay replaces the configured value during testing when the fan is required to operate.
- Supply air temperature limits are ignored.
- Alarm statuses, except **Fire / Smoke Shutdown** and the **Shutdown** input are ignored, but all alarms and alerts are still broadcast on the network, if applicable.

CARRIER CORPORATION ©2021
All rights reserved

You can turn **Service Test** on or off from Field Assistant, or the i-Vu® application. Select **Default Value** of **Enable** to turn on and **Disable** to turn off.

NOTES

- **Service Test** allows testing of each controller function.
- We recommend you return every individual **Service Test** variable (**Fan Test**, **Compressor Test**, etc.) to **Disable** after testing each function.
- All outputs return to normal operation when **Service Test** is set to **Disable**.

Service Test functions

Service Test enables the test mode and stops the normal operation of the unit. Set **Service Test** to **Enable** before any other test can be performed.

- **Fan Test** - tests the fan operation. The fan test is automatic. Set **Fan Test** to **Enable** to run the fan at the lowest available speed, depending on your configured number of fan speeds. The fan operates at that speed for approximately 1 minute and then automatically increments to high speed (if available).
- **Fan Speed** - displays the actual operating speed of the fan during the test.
- **Compressor Test** - tests the unit's compressor cooling and heating operation. During the test, the supply fan output is activated and deactivated. The compressor operates for 1 minute in cooling mode and then the reversing valve is switched to heating and the compressor operates for another minute in heating mode before the test is terminated automatically.
- **Compressor Test Mode** - displays the actual operating mode of the compressor during the compressor test.
- **Aux Heat Test** - if the equipment is configured for auxiliary heat, the test activates the unit's auxiliary heating. During the aux heat test, the appropriate heating device is activated. If **1 Stage Electric** heat is configured, the supply fan output activates and deactivates in conjunction with this test.
- **Preload OA Damper Position** - drives the OA damper actuator output to 7.5% open. The installer should secure the damper shaft to the actuator with the damper in the fully closed position at this time. This provides sufficient preload on the damper seal to ensure it fully closes.
- **Open Vent Damper 100%** - opens the damper to the 100% or fully open position.

Return all individual variables to **Disable**. Set **Service Test** to **Disable** to return to normal operation.

CARRIER CORPORATION ©2021
All rights reserved

Select or create a custom control program and graphic

The field-installed AppController does not come from the factory with a control program or graphic. You must load a control program and graphic as part of the installation/commissioning of the AppController. You can select a control program and graphic from EquipmentBuilder that has all the configurations that are currently available on a factory-installed WSHP for AppController.

After creating your control program, save and download it to the AppController. If desired, create a custom graphic using ViewBuilder. See *ViewBuilder Help* for details.

NOTE Third party integration information for current Carrier PIC products, whether on a factory-installed controller or selected from EquipmentBuilder, can be found on the *Carrier Control Systems Support Site* *http://www.hvacpartners.com/*, *https://accounts.ivusystems.com/* under **Support Center** > **Controls Support** > **Controls Product Information**.

Configure the WSHP for AppController's properties

You must configure certain points and properties. *Appendix C* (page 46) is a complete list of all the points and properties, with descriptions, defaults, and ranges. These properties affect the unit operation and/or control. Review and understand the meaning and purpose of each property before changing it.

To start up the controller, configure your necessary points/properties in the following:

- *Unit Configuration* (page 48)
- *Setpoints* (page 50)
- *Service Configuration* (page 57)

Examples of some settings that you need to configure for start-up are the **Occupied** and **Unoccupied Heating** and **Cooling** setpoints, found in the **Setpoints** section of *Appendix C* (page 46).

CARRIER CORPORATION ©2021
All rights reserved

Sequence of Operation

The controller operates mechanical cooling and heating, based on space temperature input and setpoints. An optional CO_2 (Indoor Air Quality) or RH (Relative Humidity) sensor mounted in the space maximizes occupant comfort.

See Occupancy types in *Scheduling* (page 31).

The following sections describe the WSHP for AppController's functionality. All points in this sequence of operation refer to the Equipment Touch, i-Vu®, or Field Assistant interface.

Scheduling

Scheduling - You must configure time periods to schedule the transitions from occupied to unoccupied operation. The time periods control the space temperature to occupied heating and cooling setpoints. The controller operates continuously in the **Occupied** mode until you configure either a time schedule or a third party control system **Enables/Disables** the **BAS On/Off** point. Your local time and date must be set for these functions to operate properly.

You can change the occupancy source to one of the following:

- **Occupancy Schedules**

  The controller is occupied 24/7 until you configure a time schedule using the Equipment Touch, Field Assistant, or the i-Vu® application, or until a third party control system **Enables/Disables** the **BAS On/Off** point. You can disable this by going to **Configuration** > **Unit Configuration** > **Occupancy Schedules** and changing the point from **Enable** to **Disable** and clicking **OK**.

  NOTE You must **Enable** this point in order for the Equipment Touch, Field Assistant, or the i-Vu® application to assign a time schedule to the controller.

- **Schedule**

  The unit operates according to the schedule configured and stored in the unit. The schedule is accessible in the Equipment Touch, Field Assistant, or the i-Vu® application. The daily schedule consists of a start and stop time (standard or 24 hour mode) and seven days of the week, starting with Monday and ending on Sunday.

- **Occupancy Input Contact** (optional)

  If configured for remote occupancy control (default), the controller can use an external dry contact closure to determine the occupancy status of the unit. Disable the **Occupancy Schedules** to use the occupancy contact input.

  NOTE Scheduling can only be controlled from one source.

- **BAS (Building Automation System) On/Off**

  For use with a Building Automation System that supports network scheduling, you must disable the **Occupancy Schedules** so the BAS can control the unit through a network communication and the BAS scheduling function.

  NOTE Scheduling can either be controlled from the unit or the BAS, but not both.

- **Global Occupancy Scheduling**

  The WSHP for AppController can read the occupancy status from another unit so that a group of WSHP's can be controlled from a single occupancy schedule. You must disable the local **Occupancy Schedules** in order to use the global occupancy input.

  NOTE Scheduling can only be controlled from one source.

CARRIER CORPORATION ©2021
All rights reserved

Open window contact (optional)

You can configure the optional input either as an occupancy input or a window contact input. The controller reads the status of a window contact to determine if a window has been opened. All heating and cooling is disabled if a window is open. You can configure the normal state of the switch as **N.O.** (default) or **N.C.**.

Fire/Smoke detector input

The controller reads the status of a normally closed FSD contact input to determine if a fire or smoke detector alarm is present. If an alarm condition is present, all heating, cooling, and the fan are disabled. The switch is factory-set to **Normally Closed** and cannot be changed.

Also, a network input point is provided to read the status of a network-accessible fire/smoke detector value, which also causes the unit to respond in the same manner as described above.

Shutdown input

The controller has a shutdown input (software point) that, when set to its **Active** mode, causes the WSHP to safely shutdown in a controlled fashion. Heating and cooling is disabled after any minimum runtime conditions expire and the fan is disabled after the fan-off timer expires. After the shutdown input transitions from **Active** mode to **Inactive**, the WSHP restarts, similar to a power fail restart.

Indoor fan

You can configure the indoor fan to operate in any 1 of 3 **Fan Modes**:

- **Auto** (default) - runs intermittently during both occupied and unoccupied periods
- **Continuous** - runs continuously during occupied periods and intermittently during unoccupied periods
- **Always on** - runs continuously regardless of occupancy

In the **Continuous** (default) mode, the fan is turned on when any one of the following is true:

- It is in occupied mode, and the fan mode is **Continuous**
- There is a demand for cooling or heating in the unoccupied mode
- There is a call for dehumidification (optional)
- There is requirement for DCV (optional)
- The **Fire/Smoke Shutdown** and **Shutdown** modes are inactive

CARRIER CORPORATION ©2021
All rights reserved

When power is reapplied after a power outage, or when transitioning from unoccupied to occupied, you can configure a delay of 5 - 600 (default 180) seconds before starting the fan. Configure as follows:

- **Fan On Delay** defines the delay time (0 - 30 seconds, default 30) before the fan begins to operate after heating or cooling is started and is automatically overridden if electric heat or DX cooling are active.
- **Fan Off Delay** defines the delay time (0 - 180 seconds, default 120) the fan continues to operate after heating or cooling stops.

NOTE The fan continues to run as long as the compressors, heating stages, or the dehumidification relays are on. If the fire/smoke detector contact input is active, the fan shuts down immediately, regardless of occupancy state or demand.

Automatic Fan Speed Control – The WSHP for AppController controls up to 2 fan speeds. The motor operates at the lowest speed possible to provide quiet and efficient fan operation with the best latent capability. The motor increases speed if additional cooling or heating is required to reach the desired space temperature setpoint. The motor's speed increases as the space temperature rises above or below the heating setpoint. The amount of space temperature increase above or below the setpoint that is required to increase the fan speed is a configurable setpoint.

Also, the fan speed increases as the **Supply Air Temperature** approaches the configured minimum or maximum limits.

Fan Speed Control

- **During heating** – When heat is required and active, the control continuously monitors the supply air temperature to verify it does not rise above the configured **Maximum Heating SAT Limit** [90°F (32.2°C) default]. As the SAT approaches this value, the fan speed increases to ensure the SAT remains within the limit. This provides the most quiet and efficient operation by running the fan at the lowest speed possible.
- **During cooling** – When mechanical cooling is required and active, the control continuously monitors the supply air temperature to verify it does not fall below the configured **Minimum Cooling SAT Limit** [50°F (10°C) default]. As the SAT approaches this value, the fan speed increases to ensure the SAT remains within the limit. Fan operates at the lowest speed during cooling to maximize latent capacity.

CARRIER CORPORATION ©2021
All rights reserved

Cooling

The controller operates up to two stages of compression to maintain the desired cooling setpoint. The PI (Proportional-integral) cooling loop and staging algorithm control the compressor output. The algorithm is used to calculate when the compressor should be energized or de-energized to satisfy the space by comparing the space temperature (SPT) to the appropriate cooling setpoint.

The following conditions must be true in order for the cooling algorithm to run:

- **Cooling** is set to **Enable**.
- Space temperature reading is valid.
- The **Fire/Smoke Shutdown** and **Shutdown** modes are inactive.
- Window input is normal (optional).
- Heat mode is not active and the compressor time-guard has expired.
- **Source Water** temperature is suitable for cooling.
- **Condensate Overflow** input is **Normal**..
- OAT is greater than the **Cooling Lockout Temperature** if OAT is available.
- If occupied, the SPT is greater than the **Occupied Cooling Setpoint**.
- If unoccupied, the SPT is greater than the **Unoccupied Cooling Setpoint**.

If all the above conditions are met, the compressors are energized as required, otherwise they are de-energized. If cooling is active and the SAT approaches the minimum SAT limit, the fan is indexed to the higher speed. If this is insufficient and if the SAT falls further, to 5Δ°F (2.7Δ°C) below the minimum SAT limit, the compressor cooling stage is disabled.

During cooling, the reversing valve output is held in the cooling position (either B or O type, as configured), even after the compressor is stopped. The valve does not switch position until the heating mode is required.

The configuration screens contain the **Min SAT** parameter, as well as **Cooling Lockout**, based on outdoor air temperature (OAT). Both can be adjusted to meet various specifications.

There is a 5-minute minimum off-time for the compressor(s). After the compressor(s) is staged off, it may be restarted again, only after the 5-minute time-guard has expired and if the supply air temperature increases above the minimum supply air temperature limit.

CARRIER CORPORATION ©2021
All rights reserved

Heating

The WSHP for AppController operates 1 or 2 stages of compression to maintain the desired heating setpoint. The compressor outputs are controlled by the heating PI (Proportional-integral) loop and heating stages capacity algorithm. The algorithm calculates when the compressor should be energized or de-energized to satisfy the space by comparing the space temperature (SPT) to the appropriate heating setpoint.

The following conditions must be true in order for the cooling algorithm to run:

- **Heating** is set to **Enable**.
- The **Fire/Smoke Input** and **Shutdown** modes are inactive.
- Window input is normal (optional).
- **Source Water Temperature** is suitable for heating.
- **Cool** mode is not active and the compressor time-guard has expired.
- **Condensate Overflow** input is **Normal**.
- Space temperature reading is valid.
- If occupied, the SPT is less than the **Occupied Heating Setpoint**.
- If unoccupied, the SPT is less than the **Unoccupied Heating Setpoint**.
- **OAT** is less than the **Heating Lockout Temperature** if OAT is available.

If all the above conditions are met, the heating output(s) are energized as required, otherwise, they will be de-energized. If the heating is active and the SAT approaches the **Maximum Heating SAT**, the fan is indexed to the maximum speed. If the SAT still continues to rise 5Δ°F (2.7Δ°C) above the maximum limit, all heating stages are disabled.

During **Heating**, the reversing valve output is held in the heating position (either B or O-type, as configured), even after the compressor is stopped. The valve does not switch position until the cooling mode is required.

The configuration screens contain the **Max SAT** parameter as well as heating lockout based on outdoor air temperature (OAT). Both can be adjusted to meet various specifications.

There is a 5-minute off-time for the compressor. After a compressor is staged off, it may be restarted again, only after the 5-minute time-guard has expired and if the supply air temperature has fallen below the maximum supply air temperature limit.

Auxiliary heat - The controller controls a 2-position or modulating water, or steam valve, connected to a coil on the discharge side of the unit and supplied by a boiler. It can also operate a single stage electric duct heater in order to maintain the desired heating setpoint. If the compressor capacity is insufficient, the auxiliary heat supplements the heat provided by the compressor if the space temperature falls more than 1Δ°F (.5Δ°C) below the desired heating setpoint (amount is configurable). Also, if the condenser water temperature is unsuitable for heating, the compressor is disabled and the auxiliary heat operates in place of the compressor as the first stage. The heat is controlled so the SAT does not exceed the **Maximum Heating SAT limit**.

CARRIER CORPORATION ©2021
All rights reserved

The following conditions must be true in order for this algorithm to run and to enable heating control:

- **Auxiliary Modulating Hot Water / Steam Heating Reheat** - modulates a NO or NC hot water or steam valve connected to a coil on the discharge side of the unit and supplied by a boiler, in order to maintain the desired heating setpoint if the compressor capacity is insufficient. The valve opens to supplement the heat provided by the compressor if the space temperature falls more than 1Δ°F (.5Δ°C) (default width of yellow band) below the desired heating setpoint. The valve is controlled so the SAT does not exceed the **Maximum Heating SAT** limit.
- **2-Position Hot Water / Steam Heating Reheat** - operates a 2-position, NO or NC, hot water or steam valve connected to a coil on the discharge side of the unit and supplied by a boiler, in order to maintain the desired heating setpoint if the compressor capacity is insufficient or a compressor failure occurs. Unless a compressor fault condition exists, the valve only opens to supplement the heat provided by the compressor if the space temperature falls more than 1Δ°F (.5Δ°C) below the desired heating setpoint. The valve is controlled so the SAT does not exceed the **Maximum Heating SAT** limit and is subject to a 2-minute minimum off-time to prevent excessive valve cycling.
- **Single Stage Electric Auxiliary Heat** – operates a single stage of electric heat installed on the discharge side of the unit in order to maintain the desired heating setpoint if the compressor capacity is insufficient. The heat stage only operates to supplement the heat provided by the compressor if the space temperature falls more than 1Δ°F (.5Δ°C) (default width of yellow band) below the desired heating setpoint. The heat stage is controlled so the SAT does not exceed the **Maximum Heating SAT** limit and is subject to a 2-minute minimum off-time to prevent excessive cycling.

Isolation valve

The controller operates an isolation valve to stop the flow of water through the source coil when the compressor is not operating. Two separate outputs are provided for this function. The modulating output operates a 0-10 Vdc analog isolation valve as a 2-position control, while a second discrete output, if not used for auxiliary heat, is also available. When compressor heating or cooling is needed, the valve is opened to allow water flow through the source water exchange of the WSHP. There is a 2-minute delay after the valve is opened, before attempting to start the compressor.

CARRIER CORPORATION ©2021
All rights reserved

Indoor air quality (IAQ) and demand control ventilation (DCV)

If the optional indoor air quality sensor is installed, the WSHP for AppController maintains indoor air quality with a modulating OA damper, which provides demand-controlled ventilation. The controller operates the modulating OA damper during occupied periods, monitors the CO_2 level, compares it to the configured setpoints, and adjusts the ventilation rate. The control provides proportional ventilation to meet the requirements of ASHRAE specifications by providing a base ventilation rate and then increasing the rate as the CO_2 level increases. The control begins to proportionally increase ventilation when the CO_2 level rises above the start ventilation setpoint and reaches the full ventilation rate when the CO_2 level is at or above the maximum setpoint. You can configure a minimum damper position to ensure proper base ventilation is delivered when unoccupied.

The following conditions must be true in order for this algorithm to run:

- **Damper Control** is configured for **DCV**
- The unit is in occupied mode
- IAQ sensor reading is greater than the **DCV Start CTRL Setpoint**
- The controller is not in **Fire/Smoke Shutdown** or **Shutdown** mode

The control has 4 adjustable setpoints:

- **DCV Start Ctrl Setpoint**
- **DCV Max Ctrl Setpoint**
- **Minimum damper position**
- **DCV Max Vent Damper Pos**

2-position OA damper - You can configure a ventilation damper in a 2-position ventilation mode to provide the minimum ventilation requirements during occupied periods.

Dehumidification

The control provides occupied and unoccupied dehumidification if the unit is equipped with an accessory space relative humidity sensor. When using a relative humidity sensor to control dehumidification during occupied or unoccupied times, the dehumidification setpoints are used accordingly.

A dehumidification demand is acknowledged when the indoor relative humidity becomes greater than the dehumidification setpoint. Dehumidification becomes active if the space temperature is greater than the midpoint between the occupied heating and occupied cooling setpoint. Dehumidification normally makes the fan operate in low speed, unless cooling is required. The compressor operates in the cooling mode.

CARRIER CORPORATION ©2021
All rights reserved

Demand limiting

The controller can accept 3 levels of demand limit from the BACnet network. In response to a demand limit, the unit decreases its heating setpoint and increases its cooling setpoint to widen the range, in order to immediately lower the electrical demand. You can configure the temperature adjustment for both heating and cooling and for each demand level. You can also set the response to a particular demand level to 0.

Power failure restart delay

The control provides a delay when recovering from a power failure or shutdown mode, in order to prevent excessive demand when many units start simultaneously. You can configure each unit for a unique delay between 0 and 600 seconds. The factory-programmed default delay is 180 seconds.

Alarms

Fire/Smoke Shutdown - Monitors the normally closed **Fire / Smk Detect Input** contact or the network **System Fire / Smoke** binary network input to detect a fire or smoke condition. When detected, all heating, cooling, and the fan are disabled and a **Fire/Smoke Shutdown** alarm is generated.

Space Temperature – This alarm indicates if the space temperature is outside the configured alarm limits. If active (Alarm), displays additional values for the space temperature when the alarm condition occurred and the alarm limit exceeded.

The following values are related to the **Space Temperature** alarm:

- **Alarming Temperature** – Displays the value of the space temperature that caused the alarm condition and is only visible when the **Space Temperature** is in an alarm state.
- **Alarm Limit Exceeded** – Displays the value of the alarm setpoint that was exceeded by the alarming temperature and is only visible when the **Space Temperature** is in an alarm state.

SPT Sensor (if SPT sensor was active) – The control generates an SPT sensor failure alarm if the SPT sensor fails to communicate with the control for 5 minutes or greater. The update status is monitored and if it fails to be updated, then an SPT sensor alarm is generated.

ZS Temp Sensor (if ZS sensor was active) – The control generates a ZS sensor failure alarm if the ZS sensor fails to communicate with the control for 5 minutes or greater. The update status is monitored and if it fails to be updated, then a ZS sensor alarm is generated.

Space Temp Sensor – This alarm indicates an invalid sensor condition in a physically connected space temperature sensor (SPT Sensor/T5*). Cooling, heating, and supply fan operation stop after the appropriate time guards. Normal operation resumes when the controller detects a valid sensor.

ZS Sensor Configuration – This alarm indicates that at least one ZS sensor is configured in the Sensor Binder properties and is not communicating. The alarm is reset when the configured ZS sensor is communicating or the configuration is changed to reflect the sensor is no longer connected to the Rnet.

Wireless Battery Strength (if wireless sensor is active) – The control generates a wireless battery strength alarm if one of the wireless sensor's charge strength is below 5% for 30 minutes.

Wireless Signal Strength (if wireless sensor is active) – The control generates a wireless signal strength alarm if one of the wireless sensor's radio signal strength is below 10% for 30 minutes.

CARRIER CORPORATION ©2021
All rights reserved

Space Temp Sensor – This alarm indicates an invalid sensor condition in a physically connected space temperature sensor (SPT Sensor/T5*). Cooling, heating, and supply fan operation stop after the appropriate time guards. Normal operation resumes when the controller detects a valid sensor.

ZS/WS Sensor Configuration – This alarm indicates that at least one ZS or wireless sensor is configured in the Sensor Binder properties and is not communicating. The alarm is reset when the configured ZS or wireless sensor is communicating or the configuration is changed to reflect the sensor is no longer connected to the Rnet.

Indoor Air Quality - Generates a high CO2 level alarm during occupied periods whenever the CO2 sensor value exceeds the configurable limit. Whenever there is an occupancy transition from unoccupied to occupied, or the occupied alarm limit is changed to a value that causes an alarm condition, the control automatically calculates an alarm delay (equivalent to the configured delay time in minutes/ppm, times the error that occurred, plus 15 minutes). This prevents nuisance alarms from occurring when occupancy changes or the setpoint is changed. The IAQ alarm can be disabled by setting **Occupied High IAQ Alarm Limit** to **0**.

Supply Air Temperature - Generates a supply air temperature alarm whenever the air temperature is excessively high or low. The control monitors the supply air temperature value and compares that value to the configured **High SAT Alarm Limit** and **Low SAT Alarm Limit**. The fan must have been operating for more than 5 minutes before any alarm can occur. After that time, if the SAT exceeds either value for more than 5 minutes, a supply air temperature alarm is generated. There is a 3Δ°F (1.6Δ°C) hysteresis before the alarm is reset to normal.

Condensate Overflow - Monitors a discrete input to determine the state of a condensate-level switch. You can configure the input to alarm on either an open or closed switch condition. If this input is in an alarm state, the control starts a timer, and after the timer exceeds a configurable **Condensate Overflow Alarm Delay** limit (10-second default), an alarm is generated and the unit disables the compressor and fan outputs.

Source Water Temperature - There are 4 configurable alarm limits for source water temperature. The control verifies that the water temperature is within operating range (between high and low limits) for the specific operating mode (heating or cooling) before energizing the compressor. Once the compressor starts, the source water temperature is further monitored to verify that it is within limits to ensure sufficient water is flowing through the coil. If the leaving source water temperature rises above or falls below the appropriate limits, an alarm is generated and the compressor is shut down if the condition occurs for more than 15 seconds.

Filter Alarm - Generates a dirty filter alarm after the number of fan run hours exceeds a configurable filter alarm timer limit. The control monitors the fan output and, if the fan is operating at any speed, it accumulates run-time. If the fan run-time hours exceed the configurable limit, an alarm is generated. To reset the alarm timer after the alarm has been generated, there is a **Reset Filter Alarm** input. You can disable the filter alarm by setting the **Filter Alarm Timer Delay** to **0** (factory default).

Space Relative Humidity - Generates an alarm when the space relative humidity exceeds the alarm setpoint. There are separate occupied and unoccupied high humidity alarm setpoints. The control provides a 5-minute alarm delay during unoccupied periods. During occupied periods, the control uses the occupied high RH alarm limit. When an occupancy transitions from unoccupied to occupied, or the occupied high alarm limit is lowered, causing an alarm condition to occur, the control automatically calculates an alarm delay (equivalent to the configured delay time in minutes/% RH, times the humidity error condition that occurred, + 15 minutes). This prevents nuisance alarms when an occupancy change occurs and allows time for the unit to correct an alarming humidity condition.

OAT Sensor - This alarm indicates a valid OAT sensor value is no longer available. An alarm condition can occur from a failed locally connected sensor or if a network OAT value is no longer being received by the controller. Cooling, heating, and supply fan operation continues. OAT lockouts will not operate while the sensor is in alarm. Normal operation resumes when the controller detects a valid sensor.

Airside Linkage - Once Airside Linkage has been successfully established between a zone master and the WSHP, if communications fail for more than 5 minutes, an Airside Linkage alarm is generated. The alarm automatically resets when communications are re-established. Also, the alarm is generated if more than one zone master sends data to the WSHP. The Airside Linkage alarm resets when the **Shutdown** point is set to **Active**.

Source Water Linkage - Once Source Water Linkage has been successfully established between the WSHP and the Loop controller, if communications fail for more than 5 minutes, a **Source Water Linkage** alarm is generated. The alarm automatically resets when communications are re-established.

CARRIER CORPORATION ©2021
All rights reserved

Local access to the controller

You can use the following items as a local user interface to an Open controller. These items let you access the controller information, read sensor values, and test the controller.

Connect...	To the controller's...	For...
Field Assistant[1] application	Local Access port	Temporary user interface for start-up
Equipment Touch[2] touchscreen device	Rnet port	Temporary or permanent user interface for start-up

[1] Requires a USB Link (Part #USB-L)
[2] See the *Equipment Touch Installation and Setup Guide* for detailed instructions.

CAUTION If multiple controllers share power but polarity was not maintained when they were wired, the difference between the controller's ground and the computer's AC power ground could damage the USB Link and the controller. If you are not sure of the wiring polarity, use a USB isolator between the computer and the USB Link. Purchase a USB isolator online from a third-party manufacturer.

These are accessory items that do not come with the controller.

CARRIER CORPORATION ©2021
All rights reserved

Troubleshooting

If you have problems mounting, wiring, or addressing the controller, contact Carrier Control Systems Support.

NOTE To help you troubleshoot, obtain a Module Status (Modstat) from the controller and review the System Error and Warning details.

LED's

The LED's indicate if the controller is speaking to the devices on the network. The LED's should reflect communication traffic based on the baud rate set. The higher the baud rate the more solid the LED's become.

Verify the LED patterns by cycling power to the controller and noting the lights and flashes.

LEDs	Status
Power	Lights when power is being supplied to the controller. **NOTE** The controller is protected by internal solid state Polyswitches on the incoming power and network connections. These Polyswitches are not replaceable, but they will reset themselves if the condition that caused the fault returns to normal.
Rx	Lights when the controller receives data from the network segment; there is an Rx LED for Ports 1 and 2.
Tx	Lights when the controller transmits data from the network segment; there is an Rx LED for Ports 1 and 2.
Run	Lights based on controller health.
Error	Lights based on controller health.

The **Run** and **Error** LED's indicate controller and network status.

If Run LED shows...	And Error LED shows...	Status is...
1 flash per second	1 flash per second, alternating with the **Run** LED	The controller files are archiving. Archive is complete when **Error** LED stops flashing.
2 flashes per second	Off	Normal
2 flashes per second	2 flashes, alternating with **Run** LED	Five minute auto-restart delay after system error
2 flashes per second	3 flashes, then off	The controller has just been formatted
2 flashes per second	4 flashes, then pause	Two or more devices on this network have the same network address
2 flashes per second	1 flash per second	The controller is alone on the network

CARRIER CORPORATION ©2021
All rights reserved

If Run LED shows...	And Error LED shows...	Status is...
2 flashes per second	On	Exec halted after frequent system errors, due to: • Controller halted • Program memory corrupted • One or more programs stopped
5 flashes per second	On	Exec start-up aborted, Boot is running
5 flashes per second	Off	Firmware transfer in progress, Boot is running
7 flashes per second	7 flashes per second, alternating with **Run** LED	Ten second recovery period after brownout
14 flashes per second	14 flashes per second, alternating with **Run** LED	Brownout
On	On	Failure. Try the following solutions: • Turn the controller off, then on. • Download memory to the controller. • Replace the controller.

NOTE If you resolve the issue but the **Error** LED does not turn off, cycle power to the controller.

Serial number

If you need the controller's serial number when troubleshooting, the number is on a sticker on the back of the main controller board.

To replace the controller's battery

To determine when to replace the battery, remove power and measure the voltage. If the voltage is below 2.9 volts, you need to replace the battery.

CAUTION Power must be **ON** to the controller when replacing the battery, or your date, time, and trend data will be lost.

1. Remove the battery from the controller, making note of the battery's polarity.
2. Insert the new battery, matching the battery's polarity with the polarity indicated on the controller.

CARRIER CORPORATION ©2021
All rights reserved

Compliance

FCC Compliance

This equipment has been tested and found to comply with the limits for a Class A digital device, pursuant to Part 15 of the FCC Rules. These limits are designed to provide reasonable protection against harmful interference when the equipment is operated in a commercial environment. This equipment generates, uses, and can radiate radio frequency energy and, if not installed and used in accordance with the instruction manual, may cause harmful interference to radio communications. Operation of this equipment in a residential area is likely to cause harmful interference in which case the user will be required to correct the interference at his own expense.

CAUTION Changes or modifications not expressly approved by the responsible party for compliance could void the user's authority to operate the equipment.

CE Compliance

WARNING This is a Class A product. In a domestic environment, this product may cause radio interference in which case the user may be required to take adequate measures.

BACnet Compliance

Compliance of listed products to requirements of ASHRAE Standard 135 is the responsibility of BACnet International. BTL® is a registered trademark of BACnet International.

CARRIER CORPORATION ©2021
All rights reserved

Appendix A: WSHP for AppController wire list

Open System Network - WSHP for AppController	
Project Name: Location:	Network Number: MAC Address:

Thermistor/dry contact 0-5Vdc

Point/ Cable#	Inputs	(G)	Input Type	Jumper Position of Pins	I/O Channel Number	Sensor code	Equipment Name	Point Name
	IN-1	Gnd	Therm/ Dry Contact	Upper	IN-1			
	IN-1	Gnd	0-5Vdc	Lower				
	IN-2	Gnd	Therm/ Dry Contact	Upper	IN-2			
	IN-2	Gnd	0-5Vdc	Lower				
	IN-3	Gnd	Therm/ Dry Contact	N/A	IN-3			
	IN-4	Gnd	Therm/ Dry Contact	N/A	IN-4			
	IN-5	Gnd	Therm/ Dry Contact	N/A	IN-5			
	IN-6	Gnd	Therm/ Dry Contact	N/A	IN-6			
	IN-7		Unused					
	IN-8		Unused					

Point/ Cable#	Outputs (+)	COM	B-Output Type	Jumper Position of Pins	I/O	Sensor code	Equipment Name	Point Name
	AO-1	Gnd		N/A	AO-1			
	AO-2	Gnd		N/A	AO-2			
	AO-3	Gnd		N/A	AO-3			
	BO-1	Pwr	N.O.	N/A	BO-1			
	BO-2	Pwr	N.O.	N/A	BO-2			
	BO-3	Pwr	N.O.	N/A	BO-3			
	BO-3	Pwr	N.O.	N/A	BO-3			
	BO-4	Pwr	N.O.	N/A	BO-4			
	BO-5	Pwr	N.O.	N/A	BO-5			

CARRIER CORPORATION ©2021
All rights reserved

Appendix B: Device Address Binding

Device Address Binding (DAB) allows the controller to receive data from other Open controllers when they are connected by a network. The controller receives data from other Open or BACnet controllers when they are installed as part of an i-Vu® Control System. The data transfer takes the form of DAB, which you must configure.

Currently, the controller implements DAB for the following variables:

- **System Space Temperature**
- **System Space RH**
- **System Space AQ**
- **System Outdoor Air Temperature**
- **System Fire / Smoke**
- **System Pressurization**
- **System Occupancy**
- **System Cool Demand Level**
- **System Heat Demand Level**

You can implement DAB on network points with an undefined BACnet address, displayed in the i-Vu application and Field Assistant on the **Properties** page > **Network Points** tab. See example below.

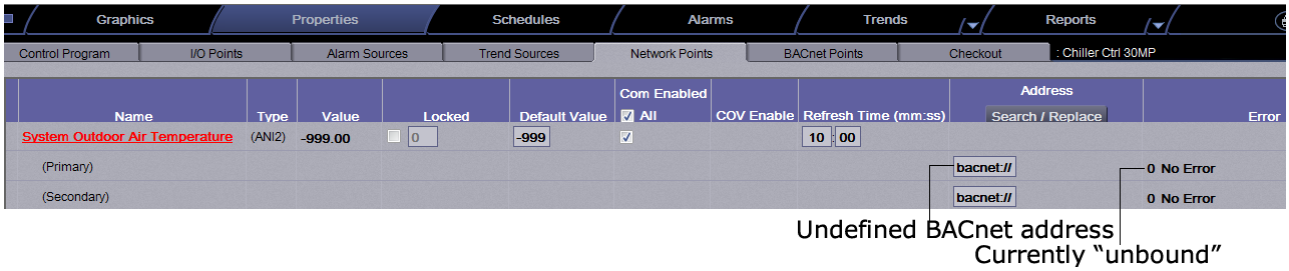

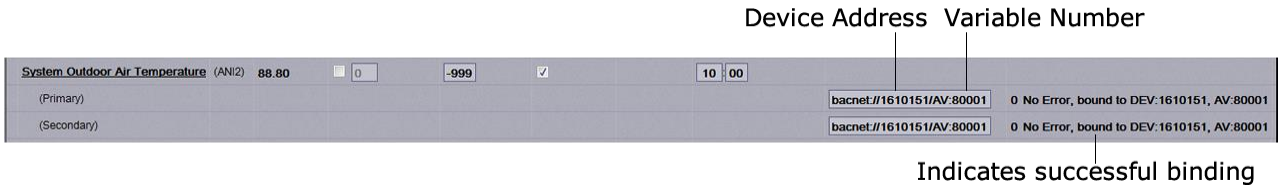

CARRIER CORPORATION ©2021
All rights reserved

Appendix C: WSHP for AppController Points/Properties

The following tables describe all of the possible settings for your controller on the i-Vu/Field Assistant or Field Assistant **Properties** tab.

NOTE Some of the properties are available only when other settings have been enabled. For example, **Status** > **Indoor Air Quality CO2 (ppm)** is visible only when **Configuration** > **Service Configuration** > **Hardwired Sensor** is set to **IAQ Sensor**.

See Appendix D for the points and properties available on the Equipment Touch interface.

NOTE Engineering units shown in this document in the defaults and ranges are strictly for reference. You must enter an integer only.

Status

Navigation: i-Vu® / Field Assistant: **Properties** > **Control Program** > **Status**

Point Name/Description	Range
System Mode – The controller's current operating mode.	R: OFF Fan Only Economize Cooling Heating Cont Fan Test Start Delay Dehumidify Fire Shutdown Shutdown IAQ Override
Space Temperature - Prime Variable – The space temperature value currently used for control.	R: -56 to 245°F (-48.9 to 118.3°C)
Supply Air Temperature – Displays the current supply air temperature.	R: -56 to 245°F (-48.9 to 118.3°C)
Leaving Source Water Temp – The temperature of the water leaving the compressor's source water loop. This value is used for control.	R: -56 to 245°F (-48.9 to 118.3°C)
Entering Source Water Temp – The temperature of the water entering the compressor's source water loop. **NOTE** If water linkage is configured, this temperature is transferred from the UC Open / UC Open XP as part of Linkage data.	R: -56 to 245°F (-48.9 to 118.3°C)
Outdoor Air Temperature – The outdoor air temperature used for control.	R: -56 to 245°F (-48.9 to 118.3°C)

CARRIER CORPORATION ©2021
All rights reserved

Point Name/Description	Range
Fan / Speed – The commanded state of the supply fan.	R: Off Low Med High On
Compressor Capacity – The percentage of compressors running.	R: 0 to 100%
Damper Output – Displays the current position of the damper as a function of the amount of outdoor air. Configuration > **Service Configuration** > **Ventilation Damper Type** must be set to **2-Pos** or **DCV**.	R: 0 to 100%
Auxiliary Heat Output – The current commanded output of the heating device. **Configuration** > **Service Configuration** > **Auxiliary Heat Type** must be set to **2-Position** or **1 Stage Electric**.	R: 0 to 100%
Space Relative Humidity – The current space relative humidity. It is used for control if a factory dehumidification reheat coil is installed. **Configuration** > **Service Configuration** > **Optional Sensor Type** must be set to **RH Sensor**.	R: 0 to 100%rh
Dehumidification – Displays whether the space requires dehumidification. **Configuration** > **Service Configuration** > **Optional Sensor Type** must be set to **RH Sensor**.	R: Inactive/Active
Indoor Air Quality CO2 (ppm) – Displays the current CO_2 sensor value. **Configuration** > **Service Configuration** > **Hardwired Sensor** must be set to **IAQ Sensor**.	R: 0 to 9999 ppm
Shutdown – When **Active**, provides a means to stop heating and cooling in an orderly manner. All alarms are reset and current active alarms are displayed.	R: Inactive/Active

CARRIER CORPORATION ©2021
All rights reserved

Unit Configuration

Navigation: i-Vu® / Field Assistant: **Properties** > **Control Program** > **Configuration** > **Unit Configuration**

Point Name/Description	Default/Range
Heat Enable – Enables or disables heating operation.	D: Enable R: Disable/Enable
Cool Enable – Enables or disables cooling operation.	D: Enable R: Disable/Enable
Fan Mode – The supply fan's operating mode. Options: **Auto** - The fan cycles on/off in conjunction with heating or cooling. **Continuous** - The fan runs continuously during occupancy and intermittently during unoccupied periods with heating or cooling. **Always On** - The fan runs continuously regardless of occupancy or calls for heating and cooling.	D: Continuous R: Auto Continuous Always On
Fan On Delay – How long the fan should delay starting after heating or cooling starts. Automatically overridden to **0** if configured for auxiliary electric heat.	D: 10 sec R: 0 to 30 sec
Fan Off Delay – How long the supply fan runs after receiving a valid stop command. The number of seconds that the fan continues to run after heating or cooling has ended.	D: 45 sec R: 0 to 180 seconds
Minimum Cooling SAT – In cooling mode, the cooling outputs are controlled so that the supply air temperature does not drop below this value.	D: 50°F (10°C) R: 38 to 60°F (3.3 to 15.5°C)
Maximum Heating SAT – In heating mode, the heating outputs are controlled so the supply air temperature does not rise above this value.	D: 90°F (32.2°C) R: 80 to 140°F (26.6 to 60°C)
Minimum Damper Pos – The minimum OA damper position maintained during occupied periods. **Service Configuration** > **Ventilation Damper Type** must be set to **DCV**.	D: 25% R: 0 to 100%
DCV Max Vent Damper Pos – The maximum outdoor air damper position allowed while DCV is active. **Service Configuration** > **Ventilation Damper Type** must be set to **DCV**.	D: 100% R: 0 to 100%
Filter Service Alarm Timer – The amount of time the fan will run before generating a **Filter Alarm**. Set to 0 to disable the alarm and reset accumulated fan hours.	D: 0 hr R: 0 to 9999 hr
Pushbutton Override – Enables or disables the use of a pushbutton override from a local space temperature sensor.	D: Enable R: Disable/Enable
Setpoint Adjustment – Enables or disables the setpoint adjustment mechanism on the local space sensor.	D: Enable R: Disable/Enable
Setpoint Adjustment Range - The maximum amount that a user can adjust the setpoint on the local SPT sensor.	D: 5Δ°F (2.7Δ°C) R: 0 to 5Δ°F (0 to 2.7Δ°C)

CARRIER CORPORATION ©2021
All rights reserved

Point Name/Description	Default/Range
Cooling Lockout Temperature – Cooling is inhibited below this outdoor air temperature.	D: -65°F (-53.9°C) R: -65 to 80°F (-53.9 to 26.6°C)
Heating Lockout Temperature – Heating is inhibited above this outdoor air temperature.	D: 150°F (65.5°C) R: 38 to 150°F (3.3 to 65.5°C)
Power Fail Restart Delay – How long the controller delays normal operation after the power is restored. Typically used to prevent excessive demand when recovering from a power failure.	D: 180 seconds R: 0 to 600 seconds
Occ Override Delay – The amount of time the controller remains occupied after the remote occupancy switch returns to the unoccupied position.	D: 15 minutes R: 0 to 240 minutes
Occupancy Schedules – If enabled, the unit runs as occupied 24/7 until another occupancy control is configured. Enables or disables the occupancy schedule function.	D: Enable R: Disable/Enable
Sensor Calibration	
Space Temperature – The current space temperature.	R: -56 to 245°F (-48.9 to 118.3°C)
Space Temp Calibration – A calibration offset value to allow the local space temperature sensor to be adjusted to match a calibrated standard measuring the temperature in the same location.	D: 0Δ°F/Δ°C R: -9.9 to 10Δ°F (-5.5 to 5.5Δ°C)
Supply Air Temperature – Displays the current supply air temperature.	R: -56 to 245°F (-48.9 to 118.3°C)
Supply Air Temp Calibration – A calibration offset value to allow the supply air temperature sensor to be adjusted to match a calibrated standard measuring the temperature in the same location.	D: 0Δ°F/Δ°C R: -9.9 to 10Δ°F (-5.5 to 5.5Δ°C)
Leaving Source Water Temperature – The current leaving source water temperature.	R: -56 to 245°F (-48.9 to 118.3°C)
Leaving SrcW Temp Calibration – A calibration offset value to allow the leaving source water temperature sensor to be trimmed to match a calibrated standard measuring the temperature in the same location.	D: 0Δ°F/Δ°C R: -9.9 to 10Δ°F (-5.5 to 5.5Δ°C)
Space Relative Humidity – Displays the current value of relative humidity sensor, if present.	R: 0 to 100%
Space RH Calibration – A calibration offset value that allows you to trim the local relative humidity sensor to match a calibrated standard measuring the space relative humidity in the same location.	D: 0%rh R: -9.9 to 10%rh

CARRIER CORPORATION ©2021
All rights reserved

Setpoints

Navigation: i-Vu® / Field Assistant: **Properties** > **Control Program** > **Configuration** > **Setpoints**

Select a color band on the setpoint graph to see the current setpoints in the **Heating** and **Cooling** fields. The values in this graphic are Fahrenheit. See setpoint descriptions below.

NOTE This graphic is an example only. Your setpoints may differ.

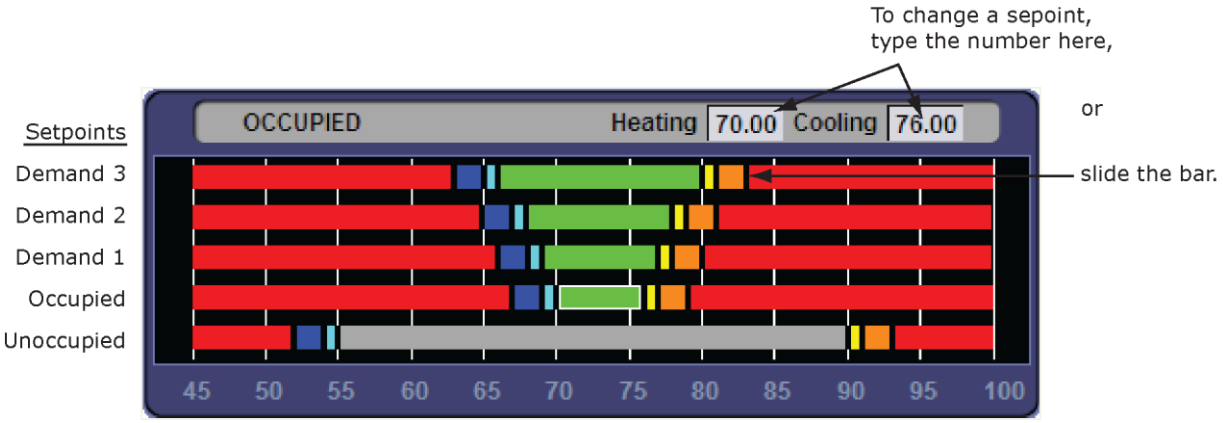

Occupied Setpoints

The occupied setpoints described below are the setpoints under normal operating conditions. The Demand Level 1–3 setpoints apply if demand limiting is used.

Demand limiting is a cost-saving strategy to reduce energy consumption. The strategy expands the occupied heating and cooling setpoints when the system reaches one of 3 levels of consumption. With the expanded setpoints, the equipment works less, thereby saving energy. By default, Demand Level 1 expands the occupied heating and cooling setpoints by 1Δ°F (Δ.5°C), Demand Level 2 by 2Δ°F (1.1Δ°C), and Demand Level 3 by 4Δ°F (2.2Δ°C). If the occupied heating or cooling setpoints change, the (effective) demand level setpoints automatically change by the same amount. See *Sequence of Operation* (page 31) for more information.

CARRIER CORPORATION ©2021
All rights reserved

Point Name/Description	Default **Range:** -40 to 245°F (-40 to 118.3°C)			
		Demand Level		
	Occupied	**1**	**2**	**3**
Occupied Heating – Green The heating setpoint the controller maintains while in occupied mode.	D: 70°F (21.1°C) R: 40 to 90°F (4.4 to 32.2°C)	69°F (20.5°C)	68°F (20°C)	66°F (18.9°C)
Occupied Cooling – Green The cooling setpoint the controller maintains while in occupied mode.	D: 76°F (24.4°C) R: 55 to 99°F (12.7 to 37.2°C)	77°F (25°C)	78°F (25.5°C)	80°F (26.6°C)
Occupied Heating 1 – Light Blue The space temperature must be less than the **Occupied Heating 1** setpoint for the VVT Master to consider the zone a heating caller in a linked system. In a single-zone application, the heating requirement begins as soon as the space temperature falls below the **Occupied Heating** setpoint. We recommend that the **Occupied Heating 1** value be set no less than 0.5Δ°F (.27Δ°C) below the **Occupied Heating** setpoint.	69°F (20.5°C)	68°F (20°C)	67°F (19.4°C)	65°F (18.3°C)
Occupied Heating 2 – Dark Blue The space temperature must be less than the **Occupied Heating 2** setpoint to generate a low space temperature alarm. We recommend that this value be set no less than 0.5Δ°F (.27Δ°C) below the **Occupied Heating 1** setpoint.	67°F (19.4°C)	66°F (18.9°C)	65°F (18.3°C)	63°F (17.2°C)
Occupied Cooling 1 – Yellow The space temperature must be greater than the **Occupied Cooling 1** setpoint for the VVT Master to consider the zone a cooling caller in a linked system. In a single-zone application, the cooling requirement begins as soon as the space temperature exceeds the **Occupied Cooling** setpoint. We recommend that the **Occupied Cooling 1** value be set no less than 0.5Δ°F (.27Δ°C) above the **Occupied Cooling** setpoint.	77°F (25°C)	78°F (25.5°C)	79°F (26.1°C)	81°F (27.2°C)
Occupied Cooling 2 – Orange The space temperature must be greater than the **Occupied Cooling 2** setpoint to generate a high space temperature alarm. We recommend that this value be set no less than 0.5Δ°F (.27Δ°C) above the **Occupied Cooling 1** setpoint.	79°F (26.1°C)	80°F (26.6°C)	81°F (27.2°C)	83°F (28.3°C)

CARRIER CORPORATION ©2021
All rights reserved

Point Name/Description	Default/Range
Unoccupied Heating – Gray The heating setpoint the controller maintains while in unoccupied mode.	D: 55°F (12.7°C) R: 40 to 90°F (4.4 to 32.2°C)
Unoccupied Cooling – Gray The cooling setpoint the controller maintains while in unoccupied mode.	D: 90°F (32.2°C) R: 45 to 99°F (7.2 to 37.2°C)
Unoccupied Heating 1 – Light Blue The space temperature must be less than the **Unoccupied Heating 1** setpoint for the VVT Master to consider the zone an unoccupied heating caller in a linked system. In a single-zone application, the unoccupied heating requirement begins as soon as the space temperature falls below the **Unoccupied Heating** setpoint. We recommend that the **Unoccupied Heating 1** value be set no less than 0.5Δ°F (.27Δ°C) below the **Unoccupied Heating** setpoint.	D: 54°F (12.2°C) R: 40 to 99°F (4.4 to 37.2°C)
Unoccupied Heating 2 – Dark Blue The space temperature must be less than the **Unoccupied Heating 2** setpoint to generate an unoccupied low space temperature alarm. We recommend that this value be set no less than 0.5Δ°F (.27Δ°C) below the **Unoccupied Heating 1** setpoint.	D: 52°F (11.1°C) R: 40 to 99°F (4.4 to 37.2°C)
Unoccupied Cooling 1 – Yellow The space temperature must be greater than the **Unoccupied Cooling 1** setpoint for the VVT Master to consider the zone an unoccupied cooling caller in a linked system. In a single-zone application, the unoccupied cooling requirement begins as soon as the space temperature exceeds the **Unoccupied Cooling** setpoint. We recommend that the **Unoccupied Cooling 1** value be set no less than 0.5Δ°F (.27Δ°C) above the **Unoccupied Cooling** setpoint.	D: 91°F (32.7°C) R: 45 to 99°F (7.2 to 37.2°C)
Unoccupied Cooling 2 – Orange The space temperature must be greater than the **Unoccupied Cooling 2** setpoint to generate an unoccupied high space temperature alarm. We recommend that this value be set no less than 0.5Δ°F (.27Δ°C) above the **Unoccupied Cooling 1** setpoint.	D: 93°F (33.9°C) R: 45 to 99°F (7.2 to 37.2°C)
Heating Capacity – Used for Optimal Start, this is the rate at which the space temperature changes when the heating system runs at full capacity to maintain designed occupied heating setpoint.	D: 3Δ°F (1.6Δ°C)/hr R: 0 to 120Δ°F (0 to 66.6Δ°C)/hr
Heating Design Temp – The geographically-based outdoor air temperature at which the heating system must run constantly to maintain comfort. This information is available in ASHRAE publications and most design references.	D: 0°F/C R: -100 to 150°F (-73.3 to 65.5°C)
Cooling Capacity – Used for Optimal Start, this is the rate at which the space temperature changes when cooling system runs at full capacity to maintain designed occupied cooling setpoint.	D: 3Δ°F (1.6Δ°C)/hr R: 0 to 140Δ°F (0 to 77.7Δ°C)/hr
Cooling Design Temp – The geographically-based outdoor air temperature at which the cooling system must run constantly to maintain comfort. This information is available in ASHRAE publications and most design references.	D: 100°F (37.7°C) R: -100 to 150°F (-73.3 to 65.5°C)

CARRIER CORPORATION ©2021
All rights reserved

Point Name/Description	Default/Range
Hysteresis – The desired difference between the temperature at which the zone color changes as the space temperature departs from the acceptable range between the heating and cooling setpoints (green) into the Cooling 1 (yellow) or Heating 1 (light blue) and the temperature at which the zone color changes back to the acceptable range between the heating and cooling setpoints. For example, the following graph shows the zone color that results as the space temperature departs from and returns to the acceptable range in a zone with the following settings: • Color Change Hysteresis = .5Δ°F (.27Δ°C) (applies as the temperature returns to the acceptable range) • Occupied cooling setpoint = 76°F (24.4°C) • Occupied heating setpoint = 70°F (21.1°C) **NOTE** The values in the graph below are Fahrenheit. 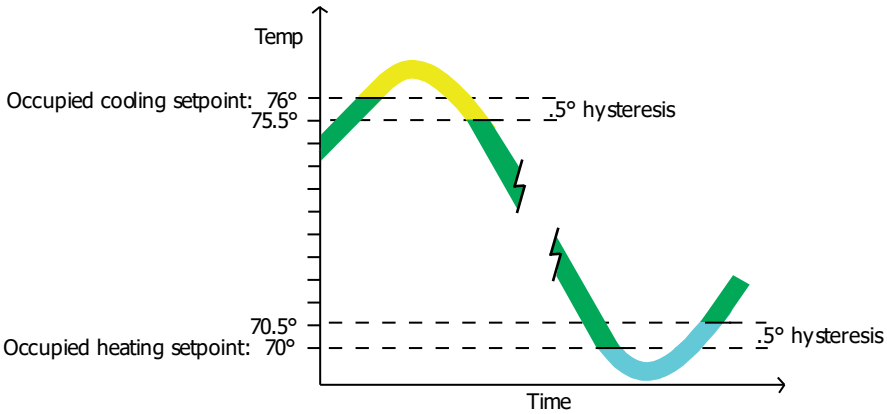 	D: 0.5Δ°F (.27Δ°C) R: 0 to 120Δ°F (0 to 66.6Δ°C)

Learning Adaptive Optimal Start

Red	DkBlue	LtBlue	Green or SpGrn		Yellow	Orange	Red
0.1900	0.1300	0.0600	0.0600	0.0600	0.0600	0.1300	0.1900

When the Learning Adaptive Optimal Start algorithm runs, the learned heating capacity or learned cooling capacity values are adjusted based on the color that is achieved when occupancy begins. The adjustment amounts for each color are displayed in the thermographic color fields (shown above with English default values).

CARRIER CORPORATION ©2021
All rights reserved

Point Name/Description	Range English	Metric
Red – The amount the zone's learned heating capacity is adjusted when the Learning Adaptive Optimal Start algorithm runs, when the zone's thermographic color at occupancy is red.	D: 0.1900 R: 0 to 1	.1055 0 to 0.5555
DkBlue – The amount the zone's learned heating capacity is adjusted when the Learning Adaptive Optimal Start algorithm runs, when the zone's thermographic color at occupancy is dark blue.	D: 0.1300 R: 0 to 1	.0722 0 to 0.5555
LtBlue – The amount the zone's learned heating capacity is adjusted when the Learning Adaptive Optimal Start algorithm runs, when the zone's thermographic color at occupancy is light blue.	D: 0.0600 R: 0 to 1	.0333 0 to 0.5555
Green – The amount the zone's learned heating capacity is adjusted when the Learning Adaptive Optimal Start algorithm runs, when the zone's thermographic color at occupancy is green.	D: 0.0600 R: 0 to 1	.0333 0 to 0.5555
SpGrn – The amount the zone's learned cooling capacity is adjusted when the Learning Adaptive Optimal Start algorithm runs, when the zone's thermographic color at occupancy is green.	D: 0.0600 R: 0 to 1	.0333 0 to 0.5555
Yellow – The amount the zone's learned cooling capacity is adjusted when the Learning Adaptive Optimal Start algorithm runs, when the zone's thermographic color at occupancy is yellow.	D: 0.0600 R: 0 to 1	.0333 0 to 0.5555
Orange – The amount the zone's learned cooling capacity is adjusted when the Learning Adaptive Optimal Start algorithm runs, when the zone's thermographic color at occupancy is orange.	D: 0.1300 R: 0 to 1	.0722 0 to 0.5555
Red – The amount the zone's learned cooling capacity is adjusted when the Learning Adaptive Optimal Start algorithm runs, when the zone's thermographic color at occupancy is red.	D: 0.1900 R: 0 to 1	.1055 0 to 0.5555

Effective Setpoints

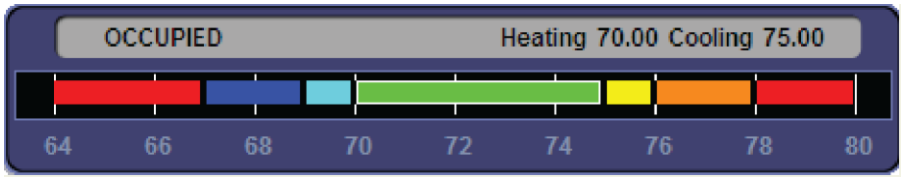

The **Effective Setpoints** graph shows the current occupied or unoccupied setpoints. If occupied, these values are the current programmed setpoints plus the offset of any setpoint adjustment that may be in effect. If unoccupied, the values are the programmed unoccupied setpoints. The values in the above graphic are Fahrenheit.

Point Name/Description	Default/Range
Heating – (Occupied or Unoccupied, depending on mode) The current programmed **Heating** setpoint adjusted by any offset that may be in effect.	R: 0 to 120°F (-17.7 to 48.9°C)
Cooling – (Occupied or Unoccupied, depending on mode) The current programmed **Cooling** setpoint adjusted by any offset that may be in effect.	R: 0 to 120°F (-17.7 to 48.9°C)

CARRIER CORPORATION ©2021
All rights reserved

Point Name/Description	Default/Range
Learned cooling capacity – The cooling capacity learned by Learning Adaptive Optimal Start that is required to bring the space temperature down to the occupied cooling setpoint prior to the occupied time.	R: _°F/C
Learned heating capacity – The heating capacity learned by Learning Adaptive Optimal Start that is required to bring the space temperature up to the occupied heating setpoint prior to the occupied time.	R: _°F/C
Min Setpoint Separation – Minimum separation that must be maintained between the heating and cooling setpoints. May be adjusted at **Configuration** > **Service Configuration** > **Min Setpoint Separation**. See the *Service Configuration* (page 57) for additional detail.	R: _°F/C
Optimal Start – The number of hours prior to occupancy, at which the Optimal Start function may begin to adjust the effective setpoints to achieve the occupied setpoints by the time scheduled occupancy begins. Enter 0 to disable Optimal Start. **NOTE** Optimal Start is automatically disabled when occupancy is controlled by a network write to the controller's keypad_ovrde variable. (Display name: **BAS On/Off**, in **Properties** > **Control Program** > **Maintenance** > **Occupancy** > **BAS On/Off**. or when utilizing **Airside Linkage** or the **System Occupancy Network Variable**.	D: 1 hr R: 0 to 4 hrs
Optimal Start Type – The method used to change from unoccupied to occupied setpoint. Options: **None*** – Unit will not change to occupied setpoint until the scheduled time or the unit goes into an occupied mode. Setpoints do not ramp, but change immediately from unoccupied to occupied values. **Temp Compensated*** – Unit changes to occupied setpoints at a variable time prior to the occupied time, which is calculated by the current difference between space temperature and the appropriate heating or cooling setpoint. At that time, the setpoints do not ramp, but change immediately from unoccupied to occupied values. **Learning Adaptive Start** – Unit gradually changes to occupied setpoints by adjusting the unoccupied setpoints over a specified period of time to achieve the occupied setpoint by the time scheduled occupancy begins.	D: Temperature Compensated None R: Temperature Compensated Learning Adaptive
Heat Start K factor (min/deg) – If **Optimal Start Type** is **Temp Compensated**, this is the time in minutes per degree that the equipment starts before the occupied period when the space temperature is below the occupied heating setpoint (including any setpoint offset).	D: 15.00 (27.00) R: 0 to 99 (0 to 177)
Cool Start K factor (min/deg) – If **Optimal Start Type** is **Temp Compensated**, this is the time in minutes per degree that the equipment starts before the occupied period when the space temperature is above the occupied cooling setpoint (including any setpoint offset).	D: 15.00 (27.00) R: 0 to 99 (0 to 177)
Occ Relative Humidity Setpoint – The control setpoint used during occupied periods.	D: 60%rh R: 0 to 100%rh
Unocc Relative Humidity Setpoint – The control setpoint used during unoccupied periods.	D: 95%rh R: 0 to 100%rh
DCV Start Ctrl Setpoint – The value that the CO_2 level must exceed to begin the IAQ control function. **Configuration** > **Service Configuration** > **Ventilation Damper Type** must be set to **DCV**.	D: 500ppm R: 0 to 9999 ppm
DCV Max Ctrl Setpoint – The value that the CO_2 level must exceed for the IAQ function to control the damper to its **DCV Max Vent Damper Pos**. **Configuration** > **Service Configuration** > **Ventilation Damper Type** must be set to **DCV**.	D: 1000ppm R: 0 to 9999 ppm

CARRIER CORPORATION ©2021
All rights reserved

Setpoints for ZS and wireless sensors

Setpoints for ZS and wireless sensors	
To configure setpoint properties for ZS or wireless sensors, **Ctrl+click** anywhere on the **Zone Setpoints:** graph at the top of the **Setpoints** section in order to access the **Properties** microblock popup. 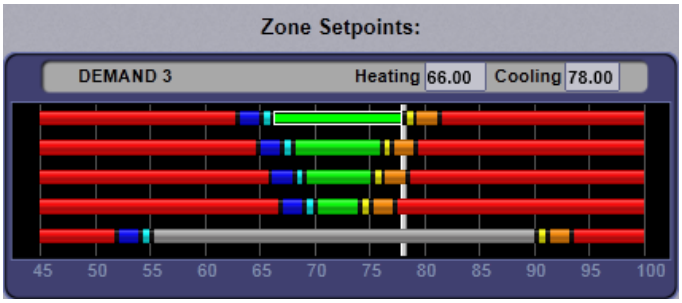 	
In the popup, on the **Properties** > **Sensor** tab, configure ZS or wireless sensors for **Setpoint Adjust**. 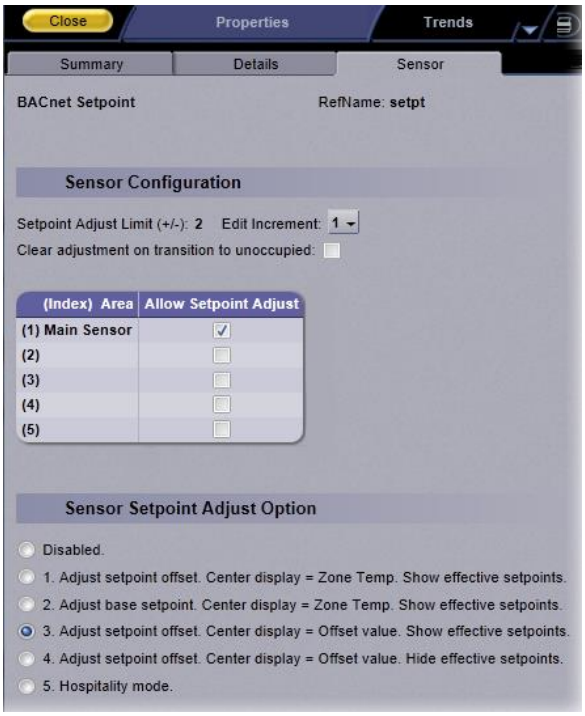 	
Edit Increment – Amount of offset in degrees for each press of the up or down arrows on the ZS or wireless sensor for setpoint adjustment.	D: 1 R: 0.1 0.5 1
Allow Setpoint Adjust – Check to allow setpoint adjustments on the specified ZS or Carrier wireless sensor.	D: (1) enabled R: disabled/enabled
Sensor Setpoint Adjust Option – Check to select the ZS or wireless setpoint adjustment display.	D: 3

CARRIER CORPORATION ©2021
All rights reserved

Service Configuration

Navigation: i-Vu® / Field Assistant: **Properties** > **Control Program** > **Configuration** > **Service Configuration**

Point Name/Description	Default/Range
# of Fan Speeds – The number of fan motor speeds.	D: One R: One Two
Fan (G) Output Type – When set to **Fan On**, **G** output is energized when any fan speed is active (required for ECM and 33ZC fan control board). When set to **Fan Low**, the output is only energized for **Low Speed**.	D: Fan Low R: Fan On/Fan Low
Compressor Stages – The number of stages of compression.	D: One Stage R: One Stage Two Stages
Reversing Valve Type – The reversing valve's signal output type.	D: O R: O/B
Auxiliary Heat Type – The type of auxiliary heat being used for leaving air. **Configuration** > **Service Configuration** > **Auxiliary Type** must be set to **Modulating** or **2-Position**.	D: None R: None Modulating 2-Position 1 Stage Electric
Aux Heat PID – This Bacnet Object determines what the leaving supply air setpoint target should be. **Configuration** > **Service Configuration** > **Auxiliary Type** must be set to **Modulating** or **2-Position**. **NOTE** The following default values should be changed only by a technician trained in PID Loop algorithms. Action: reverse Update Interval: 0:01 (mm:ss) Proportional: 1 Integral: 0.15 Derivative: 0 Deadband: 3 Bias: 0	
Aux Heat Valve Type – Defines the normal position of the source water isolation valve with no signal. **Configuration** > **Service Configuration** > **Auxiliary Type** must be set to **Modulating** or **2-Position**.	D: NC R: NC/NO (normally closed/normally open)
Isolation Valve Type – Defines the normal position of the source water isolation valve with no signal.	D: NC R: NC/NO (normally closed/normally open)
Ventilation Damper Type – The ventilation damper control being used.	D: None R: None 2-Pos DCV

CARRIER CORPORATION ©2021
All rights reserved

Point Name/Description	Default/Range
Damper Actuator Type – Used to determine damper output signal range (closed – open).	D: 0-10 V R: 0-10 V 2-10 V
Optional Sensor Type – The type of sensor used on the controller's **RH/IAQ** input. This setting determines the control channel input function. Options: **RH Sensor –** Relative humidity for zone dehumidification **IAQ Sensor** – Indoor air quality for DCV control	D: None R: None RH Sensor IAQ Sensor
RH Control – Enables or disables zone dehumidification control if valid RH sensor values are available.	D: Disable R: Disable/Enable
Fire/Smk Input – Set to **Enable** if a normally closed fire or smoke detector contact is wired to the equipment.	D: Disable R: Disable/Enable
Min Setpoint Separation – Minimum separation that must be maintained between the heating and cooling setpoints.	D: 5Δ°F (2.7Δ°C) R: 2 to 10Δ°F (1.1 to 5.5Δ°C)
Input Ch #6 Function – Determines the function of the input connected to channel #6.	D: Occupancy Sensor R: Window Contact Occupancy Sensor
Ch #6 Normal Logic State – Sets the normal logic state of input channel #6.	D: Open R: Open/Closed
Overflow Switch Alarm State – Specifies the alarm state of condensate switch input.	D: Open R: Open/Closed
Min Source Water Temp Heating – Determines the minimum source water temperature before the unit starts heating.	D: 60°F (15.5°C) R: 25 to 60°F (-3.9 to 15.5°C)
Max Source Water Temp Heating – Determines the maximum source water temperature before the unit starts heating.	D: 90°F (32.2°C) R: 65 to 100°F (18.3 to 37.7°C)
Min Source Water Temp Cooling – Determines the minimum source water temperature before the unit starts cooling.	D: 60°F (15.5°C) R: 30 to 60°F (-1.1 to 15.5°C)
Max Source Water Temp Cooling – Determines the maximum source water temperature before the unit starts cooling.	D: 95°F (35°C) R: 85 to 120°F (29.4 to 48.9°C)
CO2 Sensor Min Input Volts – The lowest voltage that should be read from the hardwired CO_2 sensor. **Configuration** > **Service Configuration** > **Hardwired Sensor** must be set to **IAQ Sensor**.	D: 1.00 V R: 0 to 5.00 V
CO2 Sensor Max Input Volts – The highest voltage that should be read from the hardwired CO_2 sensor. **Configuration** > **Service Configuration** > **Hardwired Sensor** must be set to **IAQ Sensor**.	D: 5.00 V R: 0 to 5.00 V

CARRIER CORPORATION ©2021
All rights reserved

Point Name/Description	Default/Range
CO2 Sensor Value @ Min Volts – The ppm value that correlates to the hardwired CO_2 sensor's low voltage reading. **Configuration** > **Service Configuration** > **Hardwired Sensor** must be set to **IAQ Sensor**.	D: 0 ppm R: 0 to 9999 ppm
CO2 Sensor Value @ Max Volts – The ppm value that correlates to the hardwired CO_2 sensor's high voltage reading. **Configuration** > **Service Configuration** > **Hardwired Sensor** must be set to **IAQ Sensor**.	D: 2000 ppm R: 0 to 9999 ppm
RH Sensor Min Input Volts – The lowest voltage that should be read from the hardwired relative humidity (RH) sensor. **Configuration** > **Service Configuration** > **Optional Sensor Type** must be set to **RH Sensor**.	D: 0.00 V R: 0 to 5.00 V
RH Sensor Max Input Volts – The highest voltage that should be read from the hardwired RH sensor. **Configuration** > **Service Configuration** > **Optional Sensor Type** must be set to **RH Sensor**.	D: 5.00 V R: 0 to 5.00 V
RH Sensor Value @ Min Volts – The % relative humidity that correlates to the hardwired RH sensor's low voltage reading. **Configuration** > **Service Configuration** > **Optional Sensor Type** must be set to **RH Sensor**.	D: 0% R: 0 to 40%
RH Sensor Value @ Max Volts – The % relative humidity that correlates to the hardwired RH sensor's high voltage reading. **Configuration** > **Service Configuration** > **Optional Sensor Type** must be set to **RH Sensor**.	D: 100% R: 60 to 100%

Sensor Binder / Zone Temp / Zone Humidity / ZS Zone CO2 **Ctrl+click** on the name of these properties to access the microblock popup **Properties** page > **Details** tab. See below for instructions on configuring your ZS or wireless sensors. See the microblock Help for more detailed explanations.	
Sensor Binder - Use the **Associated Sensors** table to configure the Rnet to use additional ZS or wireless sensors. Index | Area | Network Type | Address | Lock Display | Version | Status | Error 1 | Main Sensor | Rnet | 1 | | | Sensor Offline | No Comm 2 | Sensor 2 | Unused | 2 | | | Sensor Offline | None 3 | Sensor 3 | Unused | 3 | | | Sensor Offline | None 4 | Sensor 4 | Unused | 4 | | | Sensor Offline | None 5 | Sensor 5 | Unused | 5 | | | Sensor Offline | None • **Network Type** - Set to **Rnet** • **Address** - Enter the DIP switch settings that are on the additional ZS sensors (up to 5 total) or RnetID assigned to each wireless sensor in SensorBuilder • **Lock Display** - Check to make the sensor display-only	D: **(Index)** - (1) **Network Type** - Rnet **Address** - 1

CARRIER CORPORATION ©2021
All rights reserved

Zone Temp - Configure additional ZS or wireless temperature sensors used on the controller.

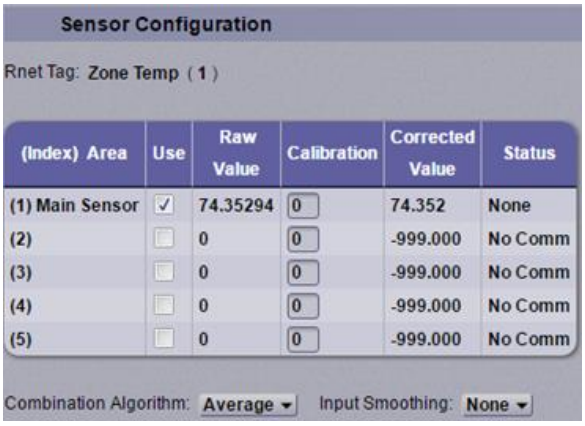

- **Use** - Check to include ZS or wireless sensors' value in the **Combined Algorithm** (**Average** is the default).
- **Raw Value** - Displays sensed temperature for each ZS or wireless temperature sensor's address
- **Calibration** - If needed, enter value to adjust the **Corrected Value** from the **Raw Value**, in order to calibrate an individual ZS or wireless sensor's sensed value.
- **Combination Algorithm** - Use **Average**, **Maximum**, or **Minimum** zone temperature to calculate the **Corrected Value** for temperature control.

D: **(Index) Area** - (1) Main Sensor

Use - checked

Calibration - 0

Combination Algorithm - Average

Input Smoothing - None

Show on Sensors - Calculated Value

Display Resolution - 1

COV Increment - .1

Zone Humidity - Configure additional ZS or wireless humidity sensors used on the controller.

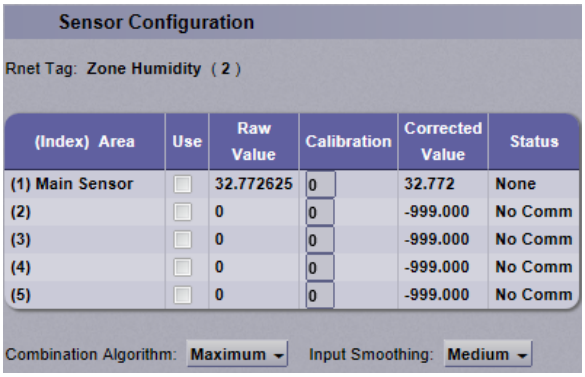

- **Use** - Check to include ZS or wireless sensors' value in the **Combined Algorithm** (**Maximum** is the default).
- **Raw Value** - Displays sensed humidity for each ZS or wireless humidity sensor's address
- **Calibration** - If needed, enter value to adjust the **Corrected Value** from the **Raw Value**, in order to calibrate an individual ZS or wireless sensor's sensed value.
- **Combination Algorithm** - Use **Average**, **Maximum**, or **Minimum** ZS or wireless humidity to calculate the **Corrected Value** for humidity control.

D: **(Index) Area** - (1) Main Sensor

Use - unchecked

Calibration - 0

Combination Algorithm - Maximum

Input Smoothing - None

Show on Sensors - Calculated Value

Display Resolution - 1

COV Increment - 1

CARRIER CORPORATION ©2021
All rights reserved

ZS Zone CO2 - Configure additional ZS CO_2 sensors used on the controller.

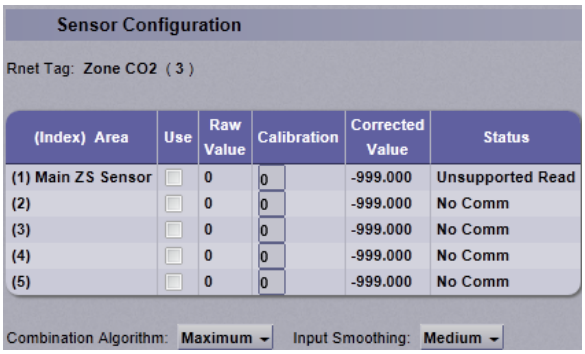

- **Use** - Check to include ZS sensors' value in the **Combined Algorithm** (**Maximum** is the default).
- **Raw Value** -Displays sensed CO_2 for each ZS CO_2 sensor's address
- **Calibration** - If needed, enter value to adjust the **Corrected Value** from the **Raw Value**, in order to calibrate an individual ZS sensor's sensed value.
- **Combination Algorithm** - Use **Average**, **Maximum**, or **Minimum** ZS CO^2 to calculate the **Corrected Value** for CO_2 control.

(Index) Area - (1) Main ZS Sensor

Use - unchecked

Calibration - 0

Combination Algorithm - Maximum

Input Smoothing - Medium

Show on Sensors - Calculated Value

Display Resolution - 1

COV Increment - 10

WS Signal Strength % — Displays radio signal strength of the wireless space temperature sensor. If there are multiple wireless sensors, it displays the lowest value.	R: _%
WS Battery Strength % — Displays charge strength indicated on the wireless space temperature sensor. If there are multiple wireless sensors, it displays the lowest value.	R: _%
Rnet Sensed Occupancy – Displays occupancy status detected by wireless infrared motion sensor.	R: Off/On
ZS model to show on graphic – Select the ZS model, from the drop-down list, that you want to display on the graphic.	D: ZS Pro-F model R: ZS Base model ZS Plus model ZS Pro model ZS Pro-F model
WS model to show on graphic – Select the wireless model, from the drop-down list, that you want to display on the graphic.	D: WS Plus model R: WS Base model WS Plus model WS Pro model
Net Space Temp to show on graphic — Select the type of sensor to display on graphic.	D: Equipment Touch R: Network Temp Equipment Touch
System Space Temperature – Allows this controller to use a space temperature value from another controller over the network. The remote controller must be equipped with a network-accessible space temperature sensor.	D: -999.0°F (-999.0°C) R: N/A

CARRIER CORPORATION ©2021
All rights reserved

System Setpoint Adjustment – The space temperature setpoint adjustment value received over the network.	D: -999.0°F (-999.0°C) R: -5 to 5Δ°F (-2.7 to 2.7Δ°C)
System Space RH – Allows using another controller's relative humidity value over the network. The remote controller must be equipped with a network-accessible relative humidity sensor value.	D: -999 R: N/A
System Space AQ – Allows this controller to use a CO_2 value from another controller over the network. The remote controller must be equipped with a network-accessible CO_2/IAQ sensor value.	D: -999 R: N/A
System Cool Demand Level – The system cool demand level being received over the network.	D: 0.00 R: 0 to 3
System Heat Demand Level – The system heat demand level being received over the network.	D: 0.00 R: 0 to 3
System Outdoor Air Temperature – Allows the controller to use an outdoor air temperature value from the network. The remote controller must have a network-accessible outdoor air temperature sensor value.	D: -999.0°F (-999.0°C) R: N/A
System Fire / Smoke – The status of the **System Fire / Smoke** network point.	D: Off R: Off/On
System Occupancy – Allows reading and using another controller's occupancy status value over the network. The remote controller must have a network-accessible Occupancy Status point.	D: Unoccupied R: Unoccupied/Occupied

Service Test	
Point Name/Description	**Default/Range**
Service Test – Enable to stop automatic control so you can test the controller's outputs. Automatically resets to **Disable** after 1 hour.	D: Disable R: Disable/Enable
Fan Test – Enable to test the controller's fan speeds. Sequences fan from low to high speed and operates at each speed for 1 minute. Resets to **Disable** when complete. **Service Test** must be set to **Enable**.	D: Disable R: Disable/Enable
Fan Speed – Displays the current fan speed being tested.	R: Off Low Med High On
Compressor Test – Enable to test compressor cooling and heating operation. Sequences cooling stage 1, then stage 2, then heating stage 2 and reduces capacity to stage 1. Operates each step for 1 minute. Resets to **Disable** when complete. **Service Test** must be set to **Enable**.	D: Disable R: Disable/Enable
Compressor Test Mode – Displays which mode is being tested by the **Compressor Test** function.	R: Heating Cooling Inactive Dehumid TG Wait

CARRIER CORPORATION ©2021
All rights reserved

Aux Heat Test – Enable to test the auxiliary output. The fan is sequenced on and enables the heating coil for 1minute. **Aux Heat Test** resets to **Disable** when complete. **Service Test** must be set to **Enable**.	D: Disable R: Disable/Enable
Preload OA Damper – Enable to drive the OA Damper 7.5% open. The installer should secure the damper shaft to the actuator with the damper in the fully closed position at this time. This assures a tight seal when the damper is in the closed position. **Service Test** must be set to **Enable**.	D: Disable R: Disable/Enable
Open Vent Damper 100% – Enable to test the OA Damper output. During the test, the damper is driven slowly to the 100%, or fully open, position. You must perform the **Preload OA Damper Position** test before this test and set **Service Test** to **Enable**.	D: Disable R: Disable/Enable

Alarm Configuration

Navigation: i-Vu® / Field Assistant: **Properties** > **Control Program** > **Configuration** > **Alarm Configuration**

Point Name/Description	Default/Range
Space Temperature Alarm	
Occupied Alarm Hysteresis – This value is added to the occupied high effective setpoint and subtracted from the occupied low effective setpoint to establish the occupied high and low limits that the space temperature must exceed before an occupied SPT alarm is generated. The alarm returns to normal when the space temperature drops below the high effective setpoint or rises above the low effective setpoint.	D: 5Δ°F (2.7Δ°C) R: 2 to 20Δ°F (1.1 to 11.1Δ°C)
Alarm Delay (min/deg) – Determines the amount of delay before an occupied space temperature alarm is generated when the controller transitions to the occupied mode. The delay time equals this value multiplied by the difference between the sensor temperature and occupied alarm setpoint plus 15 minutes.	D: 10 minutes R: 0 to 30 minutes
Unoccupied Low SPT Alarm Limit –The value that the space temperature must drop below to generate a **Space Temperature Alarm** in the unoccupied mode. There is a fixed hysteresis of 1Δ°F (.5Δ°C) for return to normal.	D: 45°F (7.2°C) R: 35 to 90°F (1.6 to 32.2°C)
Unoccupied High SPT Alarm Limit – The value that the space temperature must exceed to generate a **Space Temperature Alarm** in the unoccupied mode. There is a fixed hysteresis of 1Δ°F (.5Δ°C) for return to normal.	D: 95°F (35°C) R: 45 to 100°F (7.2 to 37.7°C)
Supply Air Temperature Alarm	
Low SAT Alarm Limit – The value that the supply air temperature must drop below to generate a **Supply Air Temp Alarm**. There is a fixed hysteresis of 3Δ°F (1.6Δ°C) for return to normal.	D: 45°F (7.2°C) R: 15 to 90°F (-9.4 to 32.2°C)
High SAT Alarm Limit – The value that the supply air temperature must exceed to generate a **Supply Air Temp Alarm**. There is a fixed hysteresis of 3Δ°F (1.6Δ°C) for return to normal.	D: 120°F (48.9°C) R: 90 to 175°F (32.2 to 79.4°C)

CARRIER CORPORATION ©2021
All rights reserved

Point Name/Description	Default/Range
Condensate Overflow Alarm	
Overflow Alarm Delay – The delay time before an alarm is generated after the alarm condition occurs.	D: 10 seconds R: 5 to 600 seconds
Space Humidity Alarm	
Occupied High RH Alarm Limit – The value that the relative humidity sensor must exceed to generate a **Space Humidity Alarm** in the occupied mode if **RH Control** is set to **Enable**. There is a fixed hysteresis of 5%rh for return to normal.	D: 100%rh R: 45 to 100%rh
Alarm Delay (min/%RH) – Determines the amount of delay before an occupied RH alarm is generated when the controller transitions to the occupied mode. The delay time equals this value multiplied by the difference between the sensor RH value and the occupied RH setpoint plus 15 minutes.	D: 5 minutes R: 0 to 30 minutes
Unocc High RH Alarm Limit – The value that the relative humidity sensor must exceed to generate a **Space Humidity Alarm** in the unoccupied mode if **RH Control** is set to **Enable**. There is a fixed hysteresis of 5%rh for return to normal.	D: 100%rh R: 45 to 100%rh
IAQ/Ventilation Alarm	
Occupied High CO2 Alarm Limit – The value that the CO_2 sensor must exceed to generate an **Indoor Air Quality Alarm** in the occupied mode if **DCV Control** is set to **Enable**. There is a fixed hysteresis of 100ppm for return to normal.	D: 1100ppm R: 0 to 9999 ppm
Alarm Delay (min/ppm) – The fractional portion of a minute used to determine the amount of delay before an indoor air quality alarm is generated when the controller transitions to the occupied mode. The delay time equals this value multiplied by the difference between the sensor CO_2 value and the setpoint plus 15 minutes.	D: 0.25 minutes R: 0.10 to 1.00 minutes
Alarms Displayed on ZS or SPT Sensor	
Fire/Smk Alarm – If set to display, shows the alarm indicator on the SPT Pro and SPT Pro Plus sensors, if the **Fire/Smoke Alarm** is active.	D: Ignore R: Ignore/Display
Space Temperature Alarm – If set to display, shows the alarm indicator on the SPT Pro and SPT Pro Plus sensors if the **Space Temperature** alarm is active.	D: Ignore R: Ignore/Display
Supply Air Temp Alarm – If set to display, shows the alarm indicator on the SPT Pro and SPT Pro Plus sensors if the **Supply Air Temp** alarm is active.	D: Ignore R: Ignore/Display
Source Water Temp Alarm – If set to display, shows the alarm indicator on the SPT Pro and Pro Plus sensor's if the **Condenser Water Temperature** is in alarm.	D: Ignore R: Ignore/Display
Condensate Overflow Alarm – If set to display, shows the alarm indicator on the SPT Pro and Pro Plus sensor's if the **Condensate Overflow** alarm is active.	D: Display R: Ignore/Display
Dirty Filter Alarm – If set to display, shows the alarm indicator on the SPT Pro and SPT Pro Plus' sensor if a **Filter** alarm is active.	D: Display R: Ignore/Display

CARRIER CORPORATION ©2021
All rights reserved

Point Name/Description	Default/Range
Space High Humidity Alarm – If set to display, shows the alarm indicator on the SPT Pro and SPT Pro Plus' sensor if the **Space Relative Humidity** alarm is active.	D: Ignore R: Ignore/Display
Space High CO2 Alarm – If set to display, shows the alarm indicator on the SPT Pro and SPT Pro Plus' sensor if the **Indoor Air Quality** alarm is active.	D: Ignore R: Ignore/Display
Maintenance Displayed on ZS Sensor	
Air Side Linkage Fault – If set to display, shows the maintenance indicator on a ZS Sensor with display, if the Airside Linkage is in a Fault condition.	D: Ignore R: Ignore/Display
Net OAT Fault – If set to display, shows the maintenance indicator on a ZS Sensor, if the network outside air reading is not valid.	D: Ignore R: Ignore/Display
SPT Sensor Fault – If set to display, shows the maintenance indicator on a ZS Sensor with display, if the zone temperature sensor reading is not valid.	D: Ignore R: Ignore/Display
Source Linkage Fault – TIf set to display, shows the maintenance indicator on a ZS Sensor with display, if the Source Linkage is in a Fault condition.	D: Ignore R: Ignore/Display

CARRIER CORPORATION ©2021
All rights reserved

Maintenance

Navigation: i-Vu® / Field Assistant: **Properties** > **Control Program** > **Maintenance**

Point Name/Description	Default/Range
Unit	
Occupancy Status – The controller's occupancy status as determined by a network schedule, a local schedule, or a timed override.	R: Occupied/Unoccupied
Temp Compensated Start or **Learning Adaptive Start** – Indicates the type of optimal start (if any) that is configured and whether the algorithm is active or inactive.	R: Inactive/Active
Space Temp Source – The source of the controlling space temperature value. Options: **Sensor Failure** – No valid space temperature or sensor status = failed. **SPT Sensor** – An SPT sensor is connected to the controller's Rnet port. **T55/56** – A T55, T56, or T59 sensor is connected to the controller's I/O terminals. **Network** – A network temperature sensor is bound to the controller's space temperature AV. **Airside Linkage** – The space temperature from a linked terminal. **Locked Value** –The controller's space temperature input has been manually locked at a value. **ZS Sensor** – A ZS sensor is connected to the controller's Rnet port. **Wireless Sensor** - A Carrier wireless sensor is connected to the controller's Wireless Adapter, which is connected to the Rnet port	R: Sensor Failure SPT Sensor T55/T56 Network Airside Linkage Locked Value ZS Sensor Wireless Sensor
Setpoint Adjustment – The amount that a user has adjusted the setpoints at a zone sensor.	R: 0 to 5Δ°F (0 to 2.7Δ°C)
Effective Heat Setpoint – The current heating setpoint. May include offsets from the configured occupied/unoccupied setpoints resulting from **Optimal Start** or **Demand Limit**.	R: _°F/C
Effective Cool Setpoint – The current cooling setpoint. May include offsets from the configured occupied/unoccupied setpoints resulting from **Optimal Start** or **Demand Limit**.	R: _°F/C
Relative Humidity Source – The source of the relative humidity value. States: **N/A** – No sensor value associated with this device **Local** – A physical sensor is wired and connected to the appropriate input channel of this controller **Network** – A network sensor value provided to this controller **Linkage** – The sensor value from a linked device, obtained through **Airside Linkage**, **Thermostat Linkage**, or **Condenser Water Linkage**. **Locked Value** –The controller's sensor input is manually locked to a specific value **ZS/WS Sensor** – A ZS or Carrier wireless sensor is connected to the controller's Rnet port	R: N/A Local Network Linkage Locked Value ZS/WS Sensor

CARRIER CORPORATION ©2021
All rights reserved

Point Name/Description	Default/Range
IAQ Source – The source of the indoor air quality value. States: **N/A** – No sensor value associated with this device **Local** – A physical sensor is wired and connected to the appropriate input channel of this controller **Network** – A network sensor value provided to this controller **Linkage** – The sensor value from a linked device, obtained through **Airside Linkage**, **Thermostat Linkage**, or **Condenser Water Linkage**. **Locked Value** –The controller's sensor input is manually locked to a specific value **ZS Sensor** – A ZS wireless sensor is connected to the controller's Rnet port	R: N/A Local Network Linkage Locked Value ZS Sensor
Outdoor Air Temperature Source – The source of the OAT value. States: **N/A** – No sensor value associated with this device **Local** – A physical sensor is wired and connected to the appropriate input channel of this controller **Network** – A network sensor value provided to this controller **Linkage** – The sensor value from an active Linkage connection, such as Airside Linkage. **Locked Value** –The controller's sensor input is manually locked to a specific value	R: N/A Local Network Linkage Locked Value
Demand Limit – The system has received over-the-network demand limiting request.	R: Inactive/Active
System Cooling Demand Level – The system cool demand level received over the network.	R: 0 to 3
System Heating Demand Level – The system heat demand level received over the network.	R: 0 to 3
Aux Heat Control Setpoint – The calculated setpoint being used for auxiliary heating control.	R: °F
Calculated DCV Damper Position – The calculated minimum damper position to maintain during an AQ override condition.	R: 0 to 100%
Active Compressor Stages – The number of compressor stages currently operating.	R: 0, 1, 2
Reset Filter Alarm – Set this to **On** to reset an active **Filter Alarm** and restart the **Filter Service Alarm Timer**. After the alarm returns to normal, this automatically changes to **Off**.	D: Off R: Off/On
Overflow Contact – The current state of the overflow input (if present).	R: Open/Closed
Input Channel #6 – The current state of the input connected to Channel #6 (if present).	R: Open/Closed
Fire/Smk Shutdown – Displays the current state of the **System Fire/Smoke** network input.	D: Normal R: Normal/Alarm
Smoke Detector Contact – The current state of the smoke detector input (if present).	D: Normal/Closed R: Normal/Closed Open/Alarm

CARRIER CORPORATION ©2021
All rights reserved

Point Name/Description	Default/Range
Occupancy	
BAS On/Off – Determines the occupancy state of the controller and can be set over the network by another device or third party BAS. Options: **Inactive** – Occupancy is determined by a configured schedule. **Occupied** – The controller is always in the occupied mode. **Unoccupied** – The controller is always in the unoccupied mode. **NOTE** If **BAS On/Off** is set to either **Unoccupied** or **Occupied**, the **Optimal Start** routine is automatically disabled.	D: Inactive R: Inactive Occupied Unoccupied
Schedules – The controller's occupancy status based on the local schedule.	R: Unoccupied/Occupied
Pushbutton Override – **Active** indicates if a user pushed the sensor's override button to override the occupancy state.	R: Off/Active
Override Time Remaining – The minutes left that the equipment runs, if activated by override.	R: 0 to 960:00 mm:ss
Occupancy Contact – The current status of **Input Channel #5** when configured as a **Remote Occupancy** contact input.	R: Inactive Active Occupied
System Occupancy – The status of the **System Occupancy** network point.	D: Unoccupied R: Unoccupied/Occupied

CARRIER CORPORATION ©2021
All rights reserved

Local BACnet Schedule	R: Off/On
Configure ZS Sensors by setting the following options in the **Local BACnet Schedule** microblock popup. Click **Local BACnet Schedule** to access the microblock popup **Properties** page > **Details** tab. See the microblock Help for more detailed explanations.	
Sensor Configuration	
Allow Force Unoccupied: – Check to allow a user to save energy by forcing the zone into an unoccupied schedule on the ZS sensor. The user does this by holding the sensor's On/Off button for at least 3 seconds. This forced state remains in effect until the schedule transitions to unoccupied or until a user presses the sensor's On/Off button again.	D: Enabled R: Disabled/Enabled
Force Unoccupied without Delay: – Check to allow a user to force a zone to unoccupied immediately instead of the normal 3-second delay. **NOTE** This option is not available if **Allow TLO Set During Occupied** is checked.	D: Enabled R: Disabled/Enabled
Timed Local Override	
Increment: – Minutes that the microblock adds to the zone's occupied time for each click of the zone's local override button or switch.	D: 30:00 mm:ss
Maximum Duration: – Maximum value (up to 960 minutes) the microblock outputs, regardless of additional pulses from the controller's input.	D: 60:00 mm:ss R: 0 to 960:00 mm:ss

Alarms

Navigation: i-Vu® / Field Assistant: **Properties** > **Control Program** > **Alarms**

Point Name/Description	Default/Range
Fire / Smoke Shutdown – Indicates if the unit is in a **Fire / Smoke Shutdown** condition.	R: Normal/Alarm
Space Temperature – Indicates if the space temperature sensor exceeds the high or low alarm limit.	R: Normal/Alarm
Alarming Temperature – The value of the alarming space temperature sensor. Visible only in an alarm condition.	R: The sensor's range
Alarm Limit Exceeded – The alarm limit that the alarming space temperature sensor exceeded. Visible only in an alarm condition.	R: -60 to 250°F (-51.1 to 121.1°C)
SPT Sensor – Indicates if the SPT space temperature sensor fails to communicate with this controller after having successfully communicated previously. (Only displayed if SPT sensor is connected and has communicated successfully.)	R: Normal/Alarm

CARRIER CORPORATION ©2021
All rights reserved

Point Name/Description	Default/Range
ZS Temp Sensor – Indicates if the ZS communicating zone temperature sensor is no longer communicating.	R: Normal/Alarm
Wireless Battery Strength Alarm – Indicates one of the configured wireless space temperature sensors is displaying low charge strength.	Normal/Alarm
Wireless Signal Strength Alarm – Indicates one of the configured wireless space temperature sensors is displaying low radio signal strength.	Normal/Alarm
Space Temp Sensor – Indicates if the space temperature sensor fails.	R: Normal/Alarm
ZS/WS Sensor Configuration– Indicates a configured ZS or wireless sensor is no longer communicating.	R: Normal/Alarm
Indoor Air Quality – Indicates if the occupied CO_2 level exceeds the configured high alarm limit.	R: Normal/Alarm
Supply Air Temperature – Indicates if the supply air temperature exceeds the high temperature alarm limit or drops below the low temperature alarm limit.	R: Normal/Alarm
Condensate Overflow – Indicates the current state of the overflow switch.	R: Normal/Alarm
Source Water Temperature – Indicates if the source water temperature exceeds the Min/Max Source Temp Heating or Min/Max Source Temp Cooling values.	R: Normal/Alarm
Filter – Indicates a dirty filter condition when the filter runtime exceeds the value of the **Filter Service Alarm Timer**.	R: Clean/Dirty
Space Relative Humidity – Indicates if the relative humidity exceeds the high RH alarm limit.	R: Normal/Alarm
OAT Sensor – Indicates the controller is no longer receiving a valid network outdoor air temperature value.	R: Normal/Alarm
Airside Linkage – Indicates that Airside Linkage has failed.	R: Normal/Alarm
Source Water Linkage – Indicates if Source Water Linkage has failed.	R: Normal/Alarm

Linkage

Navigation: i-Vu® / Field Assistant: **Properties** > **Control Program** > **Linkage**

Point Name/Description	Range
Airside Linkage	
Airside Linkage Collector – Set the **Number of Providers** to the total number of controllers in the linked system, including the bypass and VVT Master.	D: 0 R: 0 to 32
Status – If **Active**, the controller is part of a linked system. If **Not Active**, the controller is a stand-alone device.	R: Active/Not Active

CARRIER CORPORATION ©2021
All rights reserved

Point Name/Description	Range
Air Source Mode – Displays the operating mode of this equipment as reported to Linkage.	R: OFF WARMUP HEAT COOLING FREECOOL PRESSURE EVAC VENT
Air Source Supply Air Temp – Displays the **Supply Air Temperature** value reported to Linkage.	R: -56 to 245°F (-48.9 to 118.3°C)
Source Water Linkage	
Waterside Linkage Collector – Set the **Number of Providers** to the total number of controllers in the linked system. When configured, the controller can collect information from other WSHP Open controllers.	D: 1 R: 1 to 64
Waterside Linkage Provider – Allows access to configuration of a water linkage system and to the Provider's details. Enter the MS/TP **Network Number** and MAC **Address** of the controller that runs the Loop Pump Monitor control program. **Network Number** **Address** **NOTE** If you change the **Network Number** or **Address**, you must use the i-Vu® application or Field Assistant to cycle power to the controller for the changes to take effect.	 D: 0 R: 0 to 65,534 D: 0 R: 0 to 99
Source Water Linkage – If **Active**, the controller is part of a linked system. If **Not Active**, the controller is a stand-alone device.	R: Active/Not Active
Loop Pump Request – Set to **1** if this WSHP requires the source water loop to operate.	R: 0/1
Loop Pump Status – The actual state of the source water loop pump(s).	R: Off/On
Heat Request – Set to 1 if this WSHP is required to operate in a heating mode.	R: 0/1
Cool Request – Set to 1 if this WSHP is required to operate in a cooling mode.	R: 0/1
Water Loop Temp – Displays the actual temperature of the source water leaving the plant and entering this WSHP.	R: -56 to 245°F (-48.9 to 118.3°C)
Aux Heat Request – Set to 1 if this WSHP requires the auxiliary heat source to operate.	R: 0/1
Aux Heat HW Pump Status – The actual state of the auxiliary heat (boiler) pump(s).	R: Off/On
Aux Heat Boiler Water Temp – Displays the actual temperature of the boiler water leaving the plant and entering this WSHP's auxiliary heating coil. A value of -999°F indicates the value is unavailable.	R: -56 to 245°F (-48.9 to 118.3°C)
Outdoor Air Temperature – Displays the outdoor air temperature being sent to this controller through **Source Water Linkage**. A value of -999°F indicates the value is unavailable.	R: -56 to 245°F (-48.9 to 118.3°C)

CARRIER CORPORATION ©2021
All rights reserved

I/O Points

The values shown on the **I/O Points Properties** page are the raw values at the I/O objects and may not match values shown on status displays that are affected by control program logic.

i-Vu® users logged in as **Power User** and above are able to edit various parameters associated with the input channels and the display names for all channels.

We strongly recommend that you leave these parameters at their defaults. I/O can only be used for the purpose designed in the equipment control program. Modifying these parameters may result in unpredictable equipment control.

See *Wiring inputs and outputs* (page 7) for more information. This table lists each of the I/O channels, their functions, associated hardware, and terminal numbers.

Navigation: i-Vu® / Field Assistant: **Properties** > **I/O Points**

WARNINGS

- Do not change the **Value**, **Offset/Polarity**, **Exp:Num**, **I/O Type**, **Sensor/Actuator Type**, **Min/Max**, or **Resolution** I/O configuration parameter for the points listed below. Changing these parameters could cause improper control and/or equipment damage.
- Use extreme caution if locking a point as this may also cause improper control and/or equipment damage.

Point Name/Description		
Zone Temp / Zone Temp (SPT Standard, SPT Plus, SPT Pro, and SPT Pro Plus sensors only). Sensor configurations on the microblock's **Properties** > **Details** tab are listed below. For more information, see the *Carrier Sensors Installation Guide*. **NOTE** Do not edit settings on the **Zone Temp** microblock on the right.		R: -56 to 245°F (-48.9 to 118.3°C)
	Sensor Type: **Min Present Value** - Minimum present value the sensor transmits before indicating an alarm.	D: 45°F (7.2°C)
	Max Present Value - Maximum present value the sensor transmits before indicating an alarm.	D: 96°F (35.5°C)
	Setpoint Adjustment: **Max Adjust** – The amount that a user may adjust the setpoint at the sensors.	D: 5Δ°F (2.7Δ°C) R: 0 to 15Δ°F (0 to 8.3Δ°C)
	Reset setpoint adjust to zero when unoccupied - Resets the setpoint bias to zero when the controller transitions to unoccupied.	D: Off
	Timed Local Override: **Allow Continuous** (SPT Pro only) – If checked, a user can press the sensor's local override button until the **Max Accum** value is reached, then press one more time to have a continuous override until the next occupied period or until the user cancels the override. The display shows **On** during a continuous override.	D: Off R: Off/On

CARRIER CORPORATION ©2021
All rights reserved

Each Pulse – The amount of time added to the total override time when a user pushes the sensor's override button.	D: 30:00 mm:ss R: 0:00 to 1440:00 mm:ss
Max Accum – The maximum amount of override time accumulated when a user pushes the sensor's override button.	D: 240:00 mm:ss R: 0:00 to 2000:00 mm:ss
Cancel override – How long a user must push the sensor's override button to cancel an override.	D: 3 seconds R: 0 to 60 seconds
Sensor Array: **Sensor calculation method -** When using multiple SPT sensors, select the process variable to be passed to the controller.	D: Avg R: Avg, Min, Max
BACnet configuration: **Network Visible -** Must be enabled for other BACnet objects to read or write to this point, and for this point to generate alarms.	D: Enabled
Object Name - Do not change.	D: zone_temp
CO2 Sensor – The current voltage of the controller's **RH/CO2** input.	R: 0 to 5 Volt
RH Sensor – The current voltage of the controller's **RH/CO2** input.	R: 0 to 5 Volt
SAT Sensor – The value of the controller's supply air temperature sensor input, prior to any operator-configured **Calibration Offset**.	R: -56 to 245°F (-48.9 to 118.3°C)
Source Water Temperature – The temperature of the water leaving the compressor's source water loop. This value is used for control.	R: -56 to 245°F (-48.9 to 118.3°C)
WS Battery Strength % — Displays charge strength indicated on the wireless space temperature sensor. If there are multiple wireless sensors, it displays the lowest value.	R: _ %
WS Signal Strength % — Displays radio signal strength of the wireless space temperature sensor. If there are multiple wireless sensors, it displays the lowest value.	R: _%
Zone Humidity – The value provided by the controller's ZS or wireless sensor (if present). See details below.	R: _%
Zone Temp – The value provided by the controller's ZS or wireless sensor (if present).	R: _°F/C
ZS Zone CO2 - IAQ/CO2 signal received from CO2-enabled ZS Sensor(s).	R: _ppm
Overflow Contact – The current state of the overflow input (if present).	R: Open/Closed
Fire/Smk Detect Input – The current state of the smoke detector input (if present).	R: Normal/Closed Alarm/Open
Input Channel #6 – The current state of the input connected to Channel #6 (if present).	R: Open/Closed
Sensor Invalid – This internal input monitors the communication between the controller and the SPT sensor. **Off** indicates communication is normal.	R: Off/On
Rnet Sensed Occupancy – Displays occupancy status detected by wireless infrared motion sensor.	R: Off/On
OA Damper – The current, commanded output of the outdoor air damper, if equipped.	R: 0 to 100%
Aux Heat – The current commanded heating output when **Auxiliary Heat Type** is set to **Modulating HW.**	R: 0 to 100%
Isolation Valve – The current, commanded output of the modulating isolation valve output.	R: 0 to 100%

CARRIER CORPORATION ©2021
All rights reserved

Fan G – The current commanded output for the fan.	R: Off/On
Fan High Spd – The assigned output channels's current configuration-dependent, commanded fan output if **# of Fan Speeds** is set to **2**.	R: Off/On
W2/Y2 – The current commanded heating output when **Auxiliary Heat Type** is set to **2-Pos HW** or **1 Stage Electric**. (The commanded output of the 2-position isolation valve output if Auxiliary Heat Type is set to None or second stage of compression when using **Compressor Stages = Two Stage**.	R: Off/On
Y1 – The current compressor commanded output.	R: Off/On
O/B – The current commanded output of the reversing valve.	R: Off/On

CARRIER CORPORATION ©2021
All rights reserved

Appendix D: WSHP for AppController Points/Properties on the Equipment Touch

NOTE Engineering units shown in this document in the defaults and ranges are strictly for reference. You must enter an integer only.

Navigation screens

Screen Names	Display	Details
Standby	 Not an interactive screen. Touch anywhere to advance to **Home** screen.	Screen displays after the **Inactivity Timer** expires (default is 5 minutes). Displays: • Space temperature • Current setpoints • Mode - Cooling, Heating, Fan Speed, Economizer • Occupancy
Home	 Click ... on the right to navigate to **Snapshot** screen.	Displays: • Space temperature • Current setpoints • Mode - Cooling, Heating, Fan Speed, Economizer • Occupancy Features: • Pushbutton Override • Space Setpoint Offset Adjustment

CARRIER CORPORATION ©2021
All rights reserved

Screen Names	Display	Details
Snapshot	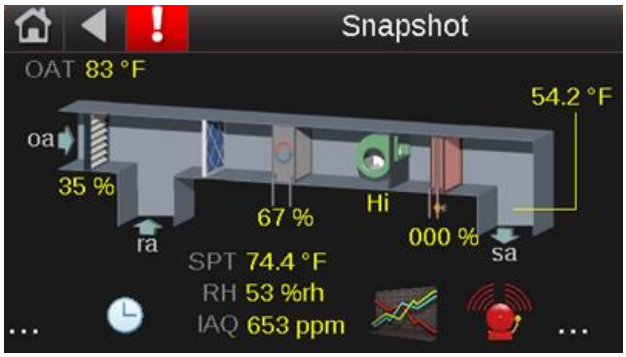 Forward to **WSHP Properties Menu** screen - click ... on the right Displays: • SAT, if allowed • RH, if available and allowed • IAQ, if available and allowed • OAT, if available and allowed • Coil & Dampers' positions and % open	Navigates to: • Alarm status • Schedules • Trends • Back to the **Home** screen - click ... on the left Displays: • controller alarms, if present • Fan speed Hi • Filter status
Fan & Mode Control	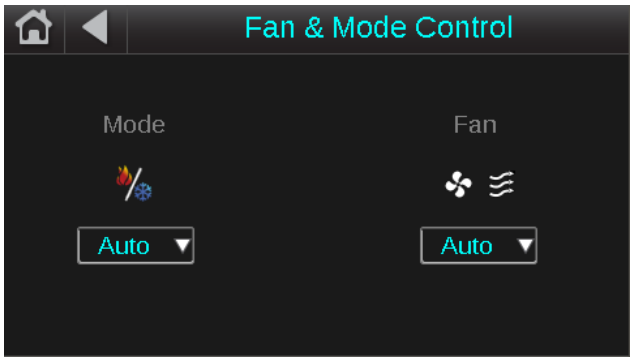	Manually set Modes and Fan Speed. Displays: • Fan Mode • Fan Speed • Cool Mode • Heat Mode

CARRIER CORPORATION ©2021
All rights reserved

Screen Names	Display	Details
WSHP for AppController Properties	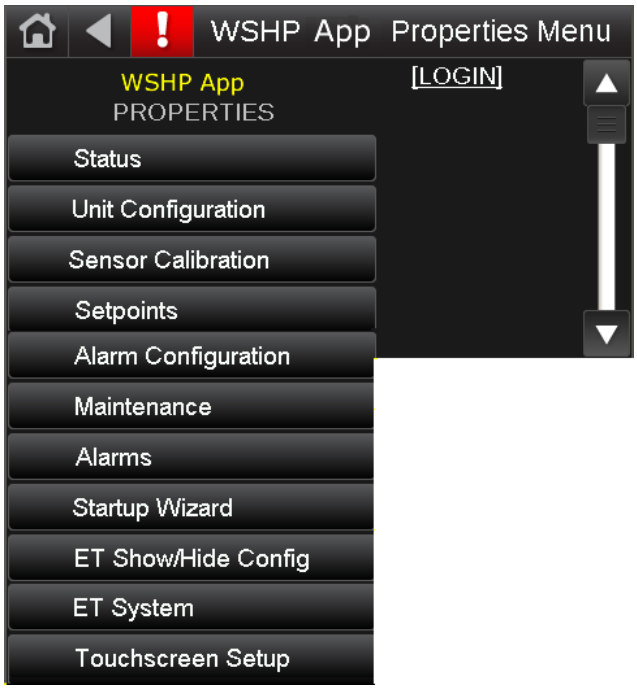	Navigates to **Property** pages Login with one of the following passwords: ○ User level - type `user` ○ Admin level - type `admin` ○ Factory level - type `Touch` **NOTE** Only the buttons that are authorized for a specific password level are visible.
Show/Hide Configuration	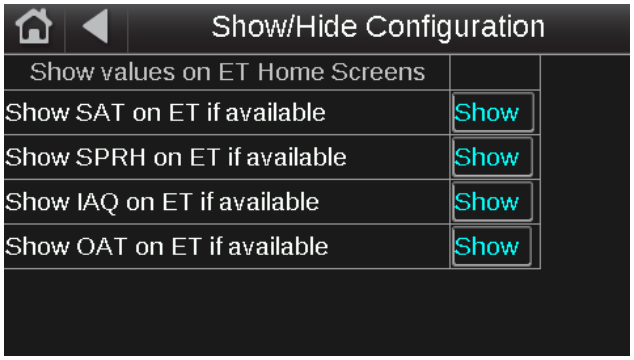	Configure Show/Hide conditions for values on the following screens: • Standby • Home • Snapshot **NOTE** Only displayed for the Factory or Admin password. (See above.)
Source Water Linkage	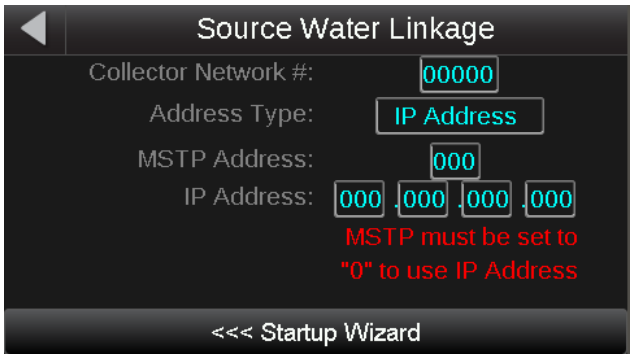 Click on the bottom to navigate to **Startup Wizard**.	Set up Source Water Linkage using the following properties: • Collector Network# • Address Type: (IP Address/MAC) • MSTP Address of Collector • IP Address of Collector (to set an IP address, the MSTP address must be set to "0")

CARRIER CORPORATION ©2021
All rights reserved

Startup Wizard

Navigation: Equipment Touch: **Startup Wizard**

Point Name/Description	Range
Aux Heat Type – The type of auxiliary heat being used for leaving air.	D: None R: None 2-Pos HW 1 Stage Electric Modulating HW
Vent Damper Type – The ventilation damper control being used.	D: None R: None 2-Pos DCV
Hardwired Humidity Sensor – Set to **Installed** if a humidity sensor is present.	D: N/A R: N/A Installed
Fan Mode – The supply fan's operating mode. Options: **Auto** - The fan cycles on/off in conjunction with heating or cooling. **Continuous** - The fan runs continuously during occupancy and intermittently during unoccupied periods with heating or cooling. **Always On** - The fan runs continuously regardless of occupancy or calls for heating and cooling.	D: Continuous R: Auto Continuous Always On
Cool Enable – Enables or disables cooling operation.	D: Enable R: Enable/Disable
Cooling Lockout Temperature – Cooling is inhibited below this outdoor air temperature.	D: 45°F R: -65 to 80°F
Heat Enable – Enables or disables heating operation.	D: Enable R: Enable/Disable
Heating Lockout Temperature – Heating is inhibited above this outdoor air temperature.	D: 65°F R: 35 to 150°F
Max Heating SAT – In heating mode, the heating outputs are controlled so the supply air temperature does not rise above this value.	D: 110°F R: 40 to 140°F
Min Cooling SAT – In cooling mode, the cooling outputs are controlled so that the supply air temperature does not drop below this value.	D: 50°F R: 40 to 60°F
Comp Stages – The number of stages of compression.	D: One Stage R: One Stage Two Stages

CARRIER CORPORATION ©2021
All rights reserved

Point Name/Description	Range
No. of Fan Speeds – The number of fan motor speeds.	D: Three R: One Two Three
Input 6 Function – Determines the function of the input connected to channel #8.	D: Remote Occupancy R: Remote Occupancy/Fan Status
Aux Heat Valve Type – Defines the normal position of the 2-position or modulating valve with no signal used to control the HW/Steam reheat coil. **Startup Wizard > Auxiliary Heat Type** must be set to **Modulating HW** or **2-Pos HW.**	D: NC R: NC/NO (normally closed/normally open)
Fan (G) Output Type – When set to **Fan On**, **G** output is energized when any fan speed is active (required for ECM and 33ZC fan control board). When set to **Fan Low**, the output is only energized for **Low Speed**.	D: Fan On R: Fan On Fan Low

CARRIER CORPORATION ©2021
All rights reserved

Source Water Linkage

Navigation: Equipment Touch: **Startup Wizard** > **Source Water Linkage**

Source Water Linkage	**Range**
Source Water Linkage 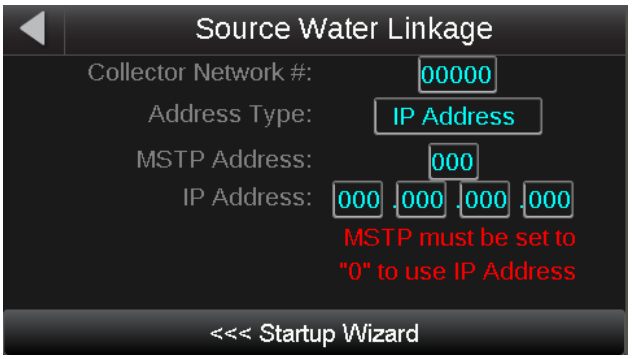 Use this screen to set up Source Water Linkage using the following properties (listed below). To navigate to **Startup Wizard**, click on the bottom.	
Collector Network# – Enter the source water controller's MSTP network number.	D: 0 R: 0 to 65,534
Address Type: – Select the type of BACnet network of the source water controller.	D: MSTP R: MSTP or IP Address
MSTP Address: – Set the MAC address of the source water controller. **NOTE** The MSTP address and IP address are mutually exclusive. To set an IP address, the MSTP address must be 0.	D: 0 R: 0 to 99
IP Address: – Set the MAC address of the source water controller. **NOTE** The MSTP address and IP address are mutually exclusive. To set an IP address, the MSTP address must be 0.	D: 0.0.0.0 R: 0.0.0.0 to 255.255.255.255

CARRIER CORPORATION ©2021
All rights reserved

Document revision history

Important changes to this document are listed below. Minor changes such as typographical or formatting errors are not listed.

Date	Topic	Change description	Code*
9/24/21	Wiring devices to the controller's Rnet port	Removed hybrid wiring configuration for Rnet port	X-TS-AK-E
8/18/20	Cover, What is the WSHP application?	Company logo updated	C-D
1/25/19	Wiring devices to the controller's Rnet port	Removed star configuration from the first paragraph.	X-TS-TS-O
	Specifications	Added surge CAUTION to Protection specification.	X-TS-AK-E-CC
10/31/18	Wiring devices to the controller's Rnet port	Combined overview and wiring on the zone sensors and touchscreen devices. Added TruVu™ ET Display.	C-D
	Wiring inputs and outputs > Input wiring specifications	Removed SPT sensor from Input wiring table, added TruVu™ ET Display, and referred user to the device's Installation and Start-up Guide.	C-D
	Specifications	Reworded Rnet port specification and added power supplied by Rnet port. Reworded Protection specification and added first paragraph.	X-H-JS-O
3/13/18	Points and Properties > Alarm Configuration Sequence of Operations > Alarms	Hysteresis corrected	C-AE-WB-O
1/9/18	Points and Properties	Added support for motion detectors.	C-AE-D
	Analog Outputs	Corrected impedance from 500 Ohms to 2000 Ohms	C-AE-ZL-E-WB
	Sequence of Operation Appendix C: WSHP for AppController Points/Properties	Updated to include metric values and wireless sensor support	C-AE-CP-E-WB
	Carrier wireless sensor overview To install the Wireless Adapter for wireless sensors	New Topics	C-D
	Wiring devices to the controller's Rnet port	Added Wireless Adapter for wireless sensors	C-D
	Input wiring specifications	Added Wireless Adapter for wireless sensors	C-D
	To wire the controller to the network	Added BACnet ARC156 connection information	C-D
	Wiring for communications	Changed from Wiring the controller to the MS/TP network	C-D
	Controller specifications	Added BACnet ARC156 connection and Wireless Adapter for Carrier wireless sensors. Corrected SPT information.	C-D
	Cover What is the controller?	Changed to latest controller image	C-D
2/22/16	Start-up	Added USB Link wiring caution.	C-TS-RD-E-JH
1/11/16	Entire document	All references to BACview removed Added ZS sensors, Equipment Touch, and 2 stages of compression	C-AE-WB/BR-E

CARRIER CORPORATION ©2021
All rights reserved

CARRIER CORPORATION ©2021 · Catalog No. 11-808-474-01 · 9/24/2021