Honeywell

Technical Reference Manual

Design and Application Guide for Honeywell Economizer Controls

63-8594-02

Table of Contents

Section 1 - Ventilation 1

Indoor Air Quality 2
Building-Related Illness 3
Symptoms of Inadequate Ventilation 4
Indoor Air Ventilation Standards 5
- CO_2 Based Demand Control Ventilation 5

Energy Standards 6
Ventilation Requirements 7
Air Handler Control Loops 9
Basic Economizer Control 10
Mixed Air Formulas 11
Outside Air Percentage Chart 12
- Example 1: Using the Outside Air Percentage Chart 13
- Example 2: Use of Outside Air Chart on a Warm Day 14
- Extra Outside Air Percentage Chart 15
- Example 3: Minimum Ventilation Adjustment 16
- Example 4: Ventilation Review Questions 18

Economizer Cycle Definition 20
- Single and Two Stage Cooling With Economizer 21

Section 2 - Enthalpy Theory And Controllers 23

The Psychrometric Chart 24
Relative Humidity and Saturation 25
Enthalpy 26
- Psychrometric Chart of Enthalpy Economizer Control 27

Single Sensor Enthalpy Control 28
Two Sensor or Differential Enthalpy 29
Enthalpy Control with Carbon Dioxide Sensor 30

Section 3 - Types of Analog Economizers 31

H705 32
W7459 33
W6210 and W7210 34
W6215, W7215 and W7460 35
W7212, W7213 and W7214 36
W7340 and W7345 37
Analog Economizer Features 38
Transformer Wiring Requirements for Analog Economizers 39

Section 4 - H705 Economizer Module 41

H705 Economizer Module 42
H705 Components 43
H705 Enthalpy Setpoint 44
H705 Wiring Diagram 45

Section 5 - M7XXX Black Motor 49

M7215, M7415, M7405 and M8405 Actuators 50

Section 6 - W7459 Economizer Module 53

W7459 Enthalpy Module Components 54
W7459A, B, C and D 56
W7459 Enthalpy Setpoint Chart 57
High Limit Switching 58
W7459A Wiring Diagram 59

Section 7 - W6210 And W7210 Economizer Modules 63

W7210 Economizer System Components 64
W6210 and W7210 Components 65
High Limit Function 65
W7210 Actuator Connections 66
W7210 Wiring Diagrams 67

Section 8- W6215, W7215 And W7460 Economizer Modules 69

W7215 System Components 70
W6215, W7215 and W7460 Components 71
W7215B and W7460B Components 71
W6215, W7215, W7460 Inputs and Outputs 72
Input and Output Applications 72
Minimum and Maximum Settings 73
Indoor Air Content Sensor Settings 74
Carbon Dioxide Sensor Setup 75
Outdoor Air Content Sensor 76
W6215, W7215 and W7460 Actuator Usage 77
W6215, W7215 and W7460 Wiring Diagram 78

Section 9 - W7212, W7213 and W7214 Economizer Modules 81

W7212 Economizer System Components 82
W7212, W7213, and W7214 Components 83
DCV Maximum Position Adjustment 84
Using Multiple CO2 sensors on the AQ-AQ1 terminals for zones 85
Minimum Position Adjustment 85
Dry bulb changeover 86
W7212, W7213, and W7214 Wiring Diagram 87

Section 10 - W7340 and W7345 Economizer Module 93

W7340 Economizer System Components 94
W7340 and W7345 Components 96
W7340 only 97
Demand Control Ventilation (DCV) Sensor Input (W7340 only) 97
Settings and Adjustment 99
Wiring for W7340 and W7345 101

Section 11 - W7220 JADE™ Economizer Module 103

W7220 Economizer System Components 104
W7220 Components 106
Wiring Application Examples 109
W7220 (JADE™) Economizer Controller Used with Honeywell Prestige© IAQ 2.0 Thermostat 129
Alarm Mode for Failed Components on the JADE™ economizer system 129
W7220 Personal Computer Tool 134

Section 12 - Sensors for Economizer Modules 157

Sensor Features 158
Type of Sensors for Economizer 159
C7150 and C7046 Mixed and Supply Air Sensors 162

Mixed or Supply Air Sensor Control Sequence 163
Carbon Dioxide Sensor 163
JADE™ Economizer (W7220) Sensors 164

Section 13 - Checkout 167

Standard Checkout Procedure 168
Checkout W7212 168
Check out C7400 with W7459, W7210 and W7212 170
Check out for W7220 JADE™ Economizer 172

Section 14 - Simulator for W7212 173

Section 15 - Demo for W7220 177

Section 16 – Economizer Savings Estimator 181

Section 17 - Retrofit and Upgrades 183

Replacement of W7459Axxx and M7415Axxx with W7220A1000 (JADE™) and M7215A1008 188
Replacement of W7212Axxx with W7220A1000 (JADE™) 191
Replacement of W7210Axxx with W7220A1000 (JADE™) 193
Replacement of W859F with W7220A1000 (JADE™) and M7285A1045 195
Replacement of W957G with W7220A1000 (JADE™) and M7285A1045 197
W957G Replaced with W7220 and M7285A1045 Mod Motor 198
Cross Reference 199
W7220 JADE™ Y-Pack Table 203

Section 18 - Appendix 207

Glossary 207
Accessories for the M74XX Series Actuators 210
Accessories for the W7220 JADE™ Economizer Module 211

Section 1 - Ventilation

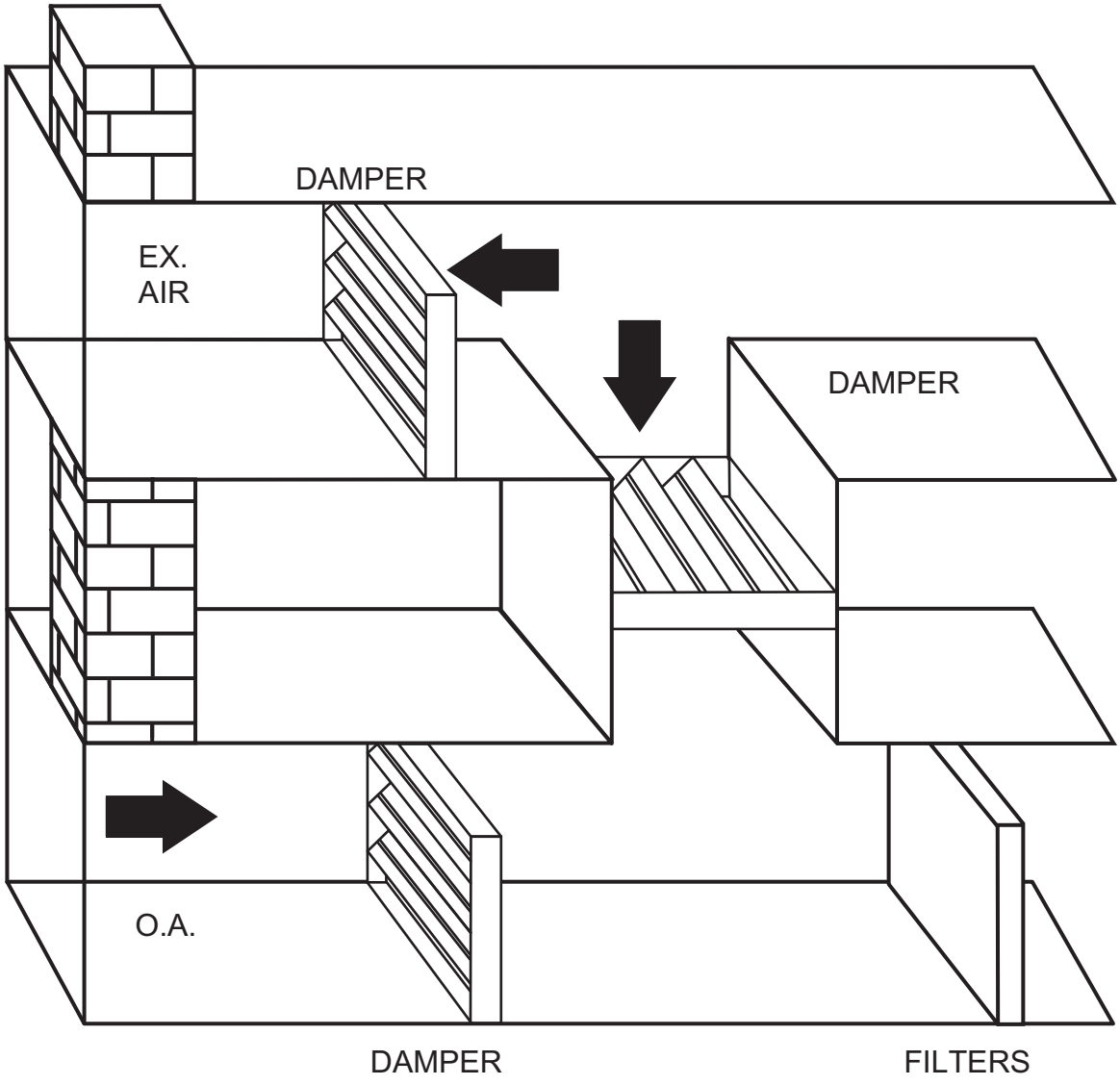

MIXED AIR SECTION

M23621

Indoor Air Quality

The characteristics of the indoor climate of a building, including the gaseous composition, temperature, relative humidity, and airborne contaminants.

The Arab oil embargo of 1974 caused many building designers to begin implementing energy cost reduction measures. One of these measures was to seal up the building shell to reducing exfiltration of indoor air and the resultant heat loss. Energy costs were reduced but there was a significant negative side effect that was not detected until 1988: Indoor Air Quality. Many buildings constructed prior to 1974 had sufficient leakage through poorly sealed windows and doors to adequately ventilate the building. Construction methods used between 1974 and 1988 substantially reduced this leakage. As a result many buildings constructed between 1974 and 1988 are not adequately ventilated for the occupants.

As the energy costs continue to rise into the beginning of the 21st century, building managers are seeking ways to reduce the energy usage in new and existing buildings and continue to provide a healthy environment for the building occupants.

Healthy Air
Building-Related Illness

A diagnosable illness with identifiable symptoms whose cause can be directly attributed to airborne pollutants within a building such as Legionnaires disease or hypersensitivity pnuemonitis.

The American Society of Heating, Refrigeration, and Air Conditioning Engineers (ASHRAE) are engineers in the HVAC industry who establish standards for the mechanical equipment used to heat, cool and ventilate buildings. Many local, state, national and international buildings codes are based on these standards. ASHRAE Standard 62.1,Ventilation for Acceptable Indoor Air Quality, is the ventilation standard for commercial buildings. It states “indoor air quality is acceptable when there are no known contaminants at concentrations determined to be harmful to building occupants, as determined by cognizant authorities, and when a substantial majority (80% or more) of those persons exposed to the indoor air do not express dissatisfaction with its quality.” This standard sets minimum outdoor air ventilation rates and requires other measures intended to provide indoor air quality that is both acceptable to human occupants and minimizes negative effects on health.

Symptoms of Inadequate Ventilation

Headaches

Dizziness

Drowsiness

Fatigue

Nausea

Eye Irritation

Respiratory Irritation

Causes of poor indoor air quality are not always caused by the design of the building. Poor or improper maintenance such as outdoor air dampers that are blocked open or completely closed, defective damper actuators or incorrectly set or malfunctioning controls may also cause inadequate ventilation. Many maintenance people respond to occupant complaints with only temperature in mind. If the room is within the acceptable temperature range of 68 to 78°F. (20 to 26°C) it is perceived that no adjustments are necessary. The occupants may have many of the symptoms listed above but do not have the knowledge to request “open the outside air damper” or “increase the volume of supply air to this room.” It is incumbent on the knowledgeable HVAC service person to recognize inadequate ventilation when it is encountered.

Indoor Air Ventilation Standards

ASHRAE is continually updating the ventilation standard (ASHRAE 62.1) to provide guidelines for design and maintenance of buildings. These standards are recommended guidelines only and are not legal requirements. However many state and local codes use the ASHRAE standards as the basis for building codes for new construction and building occupancy. They also form a basis for litigation in indoor air quality lawsuits.

Some measurements and gases referred to in the standards may not be familiar to the average person in the HVAC industry. However the majority of the information contained in these standards is very clearly stated. Everyone in the HVAC industry should be knowledgeable about the contents of these standards.

The ventilation standard states a minimum outdoor air ventilation rate required per person per type of environment in Cubic Feet per Minute (cfm). The ventilation requirement varies between occupied and unoccupied periods. Outdoor air dampers are set to a minimum position based on the maximum occupancy level for the space. To save energy the ASHRAE 62.1 standard also allows ventilation to be based on a CO_2 sensor input that determines occupancy. This is commonly referred to as CO_2-based demand control ventilation (DCV).

CO_2 Based Demand Control Ventilation

CO_2 is a fairly dependable indicator of the concentration of the odorous bioeffluents exhaled by human beings. Therefore we can use CO_2 concentration levels in a space to determine the human occupancy and reduce outdoor air intake when the space is not occupied to the maximum design occupancy level. CO_2-based DCV is an energy conservation measure; its purpose is to reduce outdoor air intake rates and the energy required to condition the outdoor air when spaces are not occupied at maximum design densities.

For those who do not want to read an engineering standard, ASHRAE offers a user manual that:

- offers information on the intent and application of Standard 62.1
- provides sample calculations and examples.
- provides useful reference materials.
- gives guidance to building operation and maintenance personnel.

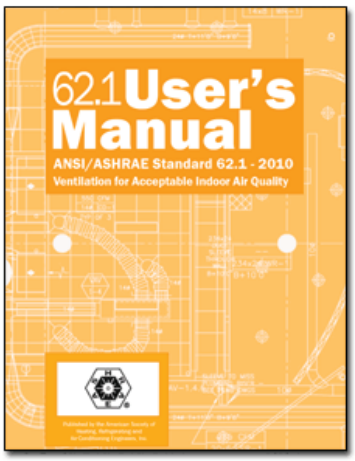

Standard 62.1 Ventilation for Acceptable Indoor Air Quality (ANSI Approved)

The Standard and User's Manual can be ordered from:

ASHRAE Publications Sales
1791 Tullie Circle, N.E.
Atlanta, GA 30329 or

www.ashrae.org

Energy Standards

There are four ASHRAE standards that affect energy use in buildings: Standard 90.1, Standard 90.2, Standard 100 and Standard 189.

Standard 90.1 Energy Efficient Design of New Buildings covers all buildings except low-rise residential for new design and build. It has been used for all buildings in the past due to the lack of detail in Standard 100.

Standard 90.2 Energy Efficient Desin of New Low-Rise Buildings covers low-rise residential buildings and has lacked detail in the past.

Standard 100 Energy Efficiency in Existing Buildings is the energy standard for existing buildings including residential. It was revised in 2012 to include compliance requirements, energy use analysis methods and energy targets, operation and maintenance and energy audit requirements for existing buildings for energy efficiency. There is also an extensive list of Energy Efficiency Measures that can be incorporated into existing buildings for energy efficiency.

Standard 189 Design of High-Performance Green Buildings except Low-Rise Residential Buildings – developed in conjunction with the US Green Buildings Council that goes beyond the requirements of Standard 90.1 for “green” buildings.

The standards are used as the basis for many federal, state and local jurisdictions as the energy code. If a state does not use the ASHRAE standards for the basis of the codes, they will use the International Energy Code Council (IECC) code.

In addition to the standards, ASHRAE has developed a series of publications designed to provide recommendations for achieving energy savings over the minimum code requirements of Standard 90.1 The guides were developed in collaboration with The American Institute of Architects (AIA), the Illuminating Engineering Society of North America (IES), the US Green Building Council (USGBC) and the U.S. Dept of Energy (DOE). All guides are free for download at the ASHRAE website.

Ventilation Requirements

Ventilation is defined as the process of bringing outside air into a building. The four major reasons for ventilation are:

1. To ensure a healthy atmosphere for the occupants. Ventilation is used to dilute indoor contaminants and provide fresh air for breathing.
2. To pressurize the building. Positive pressure inside a building prevents infiltration of unconditioned and unfiltered outside air through openings.
3. To provide atmospheric cooling. Bringing in cool outside air is more energy efficient and less costly than using mechanical cooling equipment.
4. To replace air that is being exhausted. The term for this is make-up air. Whenever air is exhausted, replacement air must be provided.

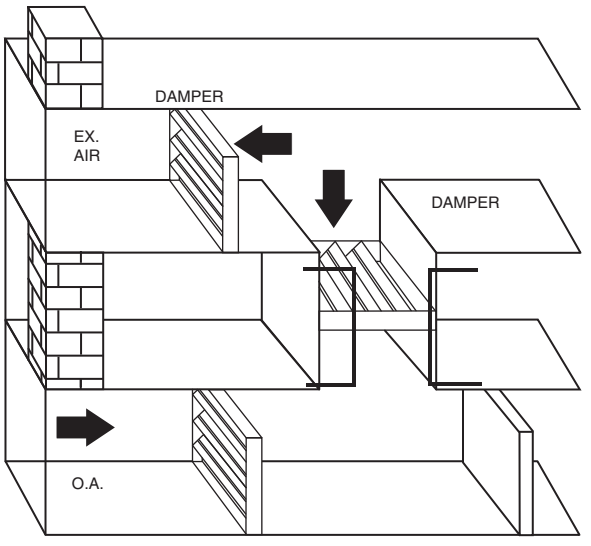

MIXED AIR SECTION M23621A

The air controls in the mixing section of a HVAC unit are used to maintain a minimum ventilation volume at all times. This is in addition to controlling the dampers for atmospheric cooling.

Determining the amount of ventilation required for a space is probably one of the hardest tasks an engineer faces in the design of the ventilation system. Section 6 of ASHRAE 62.1 offers two procedures designers can use to determine ventilation rates, the Ventilation Rate Procedure (VRP) and the Indoor Air Quality Procedure (IAQP).

The VRP method is based on typical spaces and usage, the rates are intended to dilute and exhaust bioeffluents from occupants and building contaminants to satisfy the 80% of the occupants of the space. There are two sources of contaminants in a space that ventilation is intended to reduce: Occupants and their activities (e.g., use of office equipment) and Off-gassing from building materials. The ventilation rate in the breathing zone (V_{bz}) required for both people related sources (V_p) and building related sources (V_a) is:

$$V_{bz} = V_p + V_a$$

V_p and V_a both have two components; V_p is the number of people in the space (P_z) times the occupant comfort factor R_p (minimum ventilation rate determined by extensive studies for occupant comfort based on activity level in the space) and V_a is the area of the space (A_z) times the building component factor R_a (minimum ventilation rate determined by extensive studies for occupant comfort based on type of space). Therefore ventilation required in the breathing zone becomes:

$$V_{bz} = R_pP_z + R_aA_z$$

R_p and R_a values are found in ASHRAE 62.1 User's manual (Table 6-A) and ASHRAE 62.1 Standard.

The outdoor air or recirculated air may be cleaned using a filter or air cleaner but the outdoor air ventilation rates cannot be reduced below the rate determined by the above formula.

The IAQP method is used for spaces where the designers target a specific contaminant and control the concentration level of the contaminant. This method has two requirements: Maintain concentration of specific contaminant(s) below target concentration limits and achieve a design target of perceived indoor air quality acceptability. The IAQP method allows ventilation rates to be lower than the rates required by the VRP method if it can be demonstrated the resulting air quality can meet the required criteria.

The IAQP procedure has 4 steps:

- Identify the contaminants of concern.
- Determine acceptable concentration of contaminant(s).
- Specify the perceived indoor air quality criteria.
- Apply an acceptable design approach to achieve the performance criteria.

Additional information on ventilation and the two methods used to determine the ventilation rates can be found in ANSI/ASHRAE Standard 62.1 and in the User's manual for ANSI/ ASHRAE Standard 62.1. Both documents are available on the ASHRAE website at http://resourcecenter.ashrae.org/store/ashrae/

Example using the VRP method: Office space of 6600 sq. feet with maximum occupancy of 7 persons per 1000 ft^2.

$V_{bz} = R_pP_z + R_aA_z$ where
R_p = 5 cfm per person
(Table 6-A ASHRAE 62.1 User's Manual)
P_z = 7 person per 1000 ft^2 x A_z
R_a = 0.06 cfm per ft^2
(Table 6-A ASHRAE 62.1 User's Manual)
A_z = 6600 ft^2.

V_{bz} = 5 ft^3 / min/person x 7 persons/1000 ft^2 x 6600 ft^2 + 0.06 ft^3/ min/ft^2 x 6600 ft^2
= 231 cfm + 396 cfm
=627 cfm

For a single zone system V_{OT} (outdoor ventilation) is the same as V_{bz}. For multiple zone systems a zone air distribution system effectiveness (E) factor needs to be used in the calculation of the V_{OT}. See ASHRAE Standard 62.1 for method.

In our example during maximum occupancy the ventilation is 627 cfm. When the occupancy rate is less than the maximum occupancy, the ventilation rate can be adjusted to a lower occupancy and the ventilation increased as the CO_2 level in the space increases. This can be done following these steps:

- Calculate the V_{OT}.
- Use $V_{bz} = R_pP_z + R_aA_z$, where P_z = 0. This is the new ventilation rate V_{at} (the area building based component).
- Add a CO_2 sensor to the space.
- Adjust the CO_2 maximum to the V_{bz} (for maximum occupancy).
- Adjust the minimum position for occupancy for V_a.

In our example the V_{bz} ventilation is 627 cfm and the minimum position (V_a) is 396 cfm. Using a CO_2 sensor for Demand Control Ventilation, the new minimum position is set for 396 cfm and the maximum damper position for occupancy ventilation is 627 cfm. When one person enters the space or the commercial thermostat goes into occupancy mode, the outdoor air dampers will open to bring in 396 cfm of outdoor air. As space occupancy increases, the CO_2 level will increase and the outdoor air dampers will modulate open to the maximum of 627 cfm of outdoor air.

NOTE: When the commercial thermostat calls for free cooling using an economizer, the dampers are still allowed to override the DCV maximum position for ventilation and open the damper 100% open for maximum free cooling.

Air Handler Control Loops

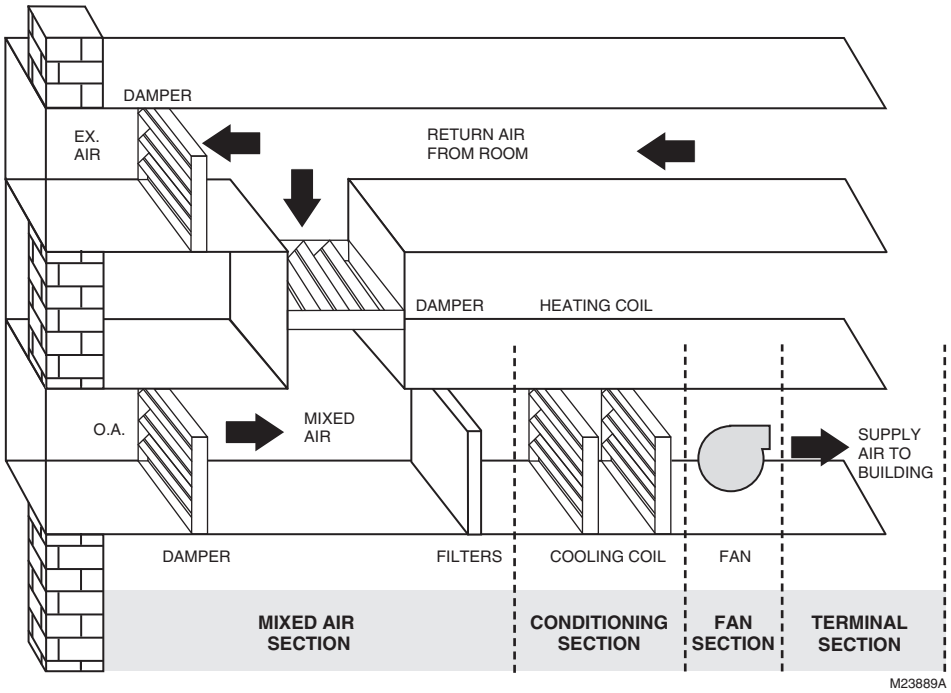

There are typically four sections of an air handler. The **Mixed Air Section** is where return air and outside air are combined (mixed). Note some systems' fans may be 100% return air or 100% outside air and will not have a mixed air section.

The **Conditioning Section** commonly contains filtration, heating, cooling and humidification. The filters and heating and cooling coils are located in the conditioning section of the air handler.

In the **Fan Section** on the air handler shown there is a supply fan. On other air handlers there may be a return or exhaust fan. The supply fan on this unit is referred to as a pull-through because it is located on the outlet of the coils. If it were located in front of the coils then it would be a push-through fan.

The **Terminal Section** is composed of all the components between the central fan and the zones.

Basic Economizer Control

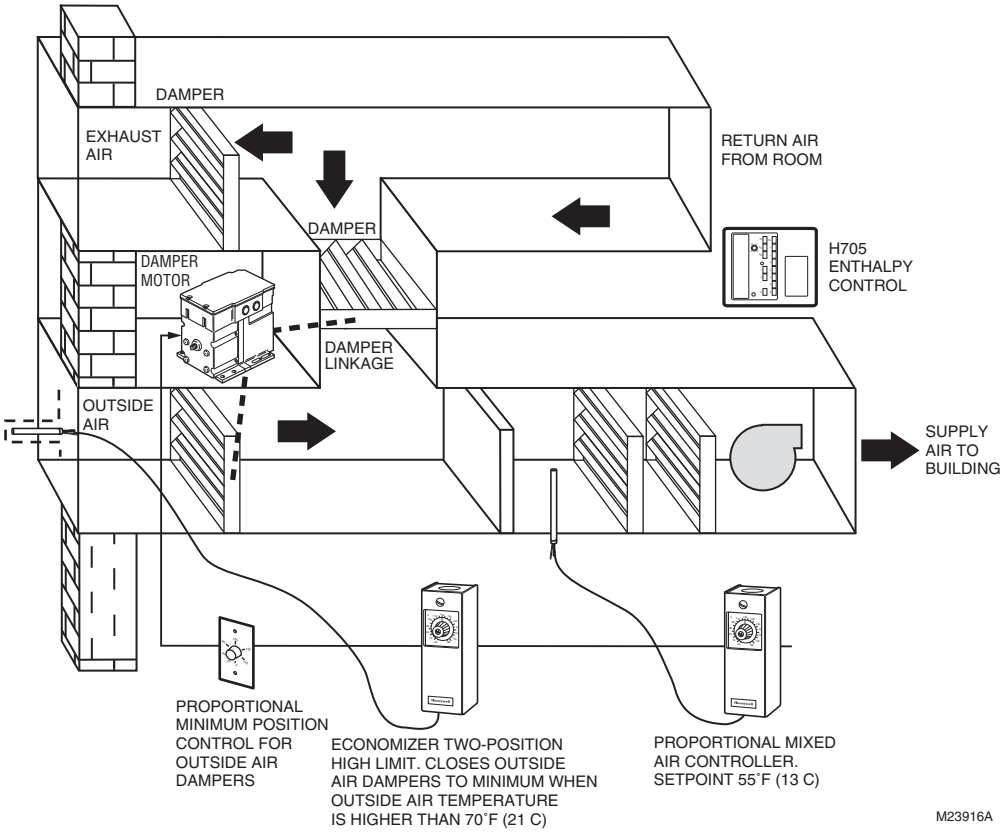

Shown is the most basic temperature based economizer control configuration. An averaging element mixed air controller with the sensing element is located in the duct before the cooling or heating coils and maintains the mixed air at 55°F (13°C). A two position limit controller with sensing element in outdoor air is used to close the outside air dampers to a minimum position if the outdoor air temperature is too warm to use for cooling.

There is a minimum position control on most air handlers. The function of this control is to ensure proper ventilation. The control provides adjustable damper positioning between 0 and 100%. The outdoor damper position must be set for minimum ventilation requirements based on building occupancy as defined by state or local code.

NOTE: A setting of 25% does not produce 25% airflow because the flow through dampers is nonlinear.

It is important to know how much outside air is being brought into a building through the outdoor dampers on the air handlers. When the return and mixed air temperatures can be measured there is a formula used to calculate the settings that will provide the desired quantity of outside air.

Using the formula $V_{bz} = V_p$ we know the total ventilation and volume required. A second formula is used to calculate the mixed air temperature when the outside air temperature, the return air temperature and the required percentage of outside air are known.

Mixed Air Formulas

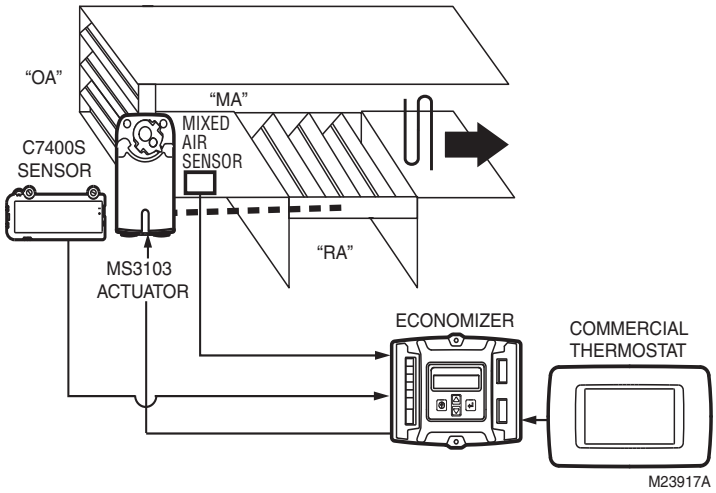

$$\frac{\text{Return Air Temperature} - \text{Mixed Air Temperature}}{\text{Return Air Temperature} - \text{Outdoor Air Temperature}} \times 100\% = \text{Volume (\%) of Outside Air}$$

Formula for Measuring the Percentage of Outside Air in an Air Handler.

This formula is used to determine the percentage of outside air (by volume) being brought into a building from the outside. The OA dampers can be adjusted by measuring the MA, OA and RA to balance the correct V_{bz}. It is a test that should be conducted during routine maintenance to ensure that the correct percentage of ventilation is being provided. Note the fan must be running with the panels on the unit to take these measurements. Drill a hole in the side of the unit and insert temperature probe to measure the MA temperature. The hole must be sealed when measurements are completed.

$$\left[\text{Return Air Temperature} \times \text{\% of Return Air}\right] + \left[\text{Outside Air Temperature} \times \text{\% of Outside Air}\right] = \text{Temperature of Mixed Air}$$

Formula for Adjusting the Minimum Position Control.

This formula is used to make adjustments to the mixed air controls. In ASHRAE 62.1 there are two components of the percent of outdoor air ventilation required, the human component and the buildings effluent component. The rates in the standard are based on the type of human activity normally performed in the building. For example: the base rate for office buildings is 5 cfm per person and the building effluent rate is 0.06 cfm per square foot of space. Initially only two temperatures are measured, return and outside air. The minimum position control is then adjusted until the mixed air temperature is equal to the result of the formula. For design requirements for CFM per person for all building types, refer to ASHRAE standard 62.1 section 6 and/or local or state building codes.

Outside Air Percentage Chart

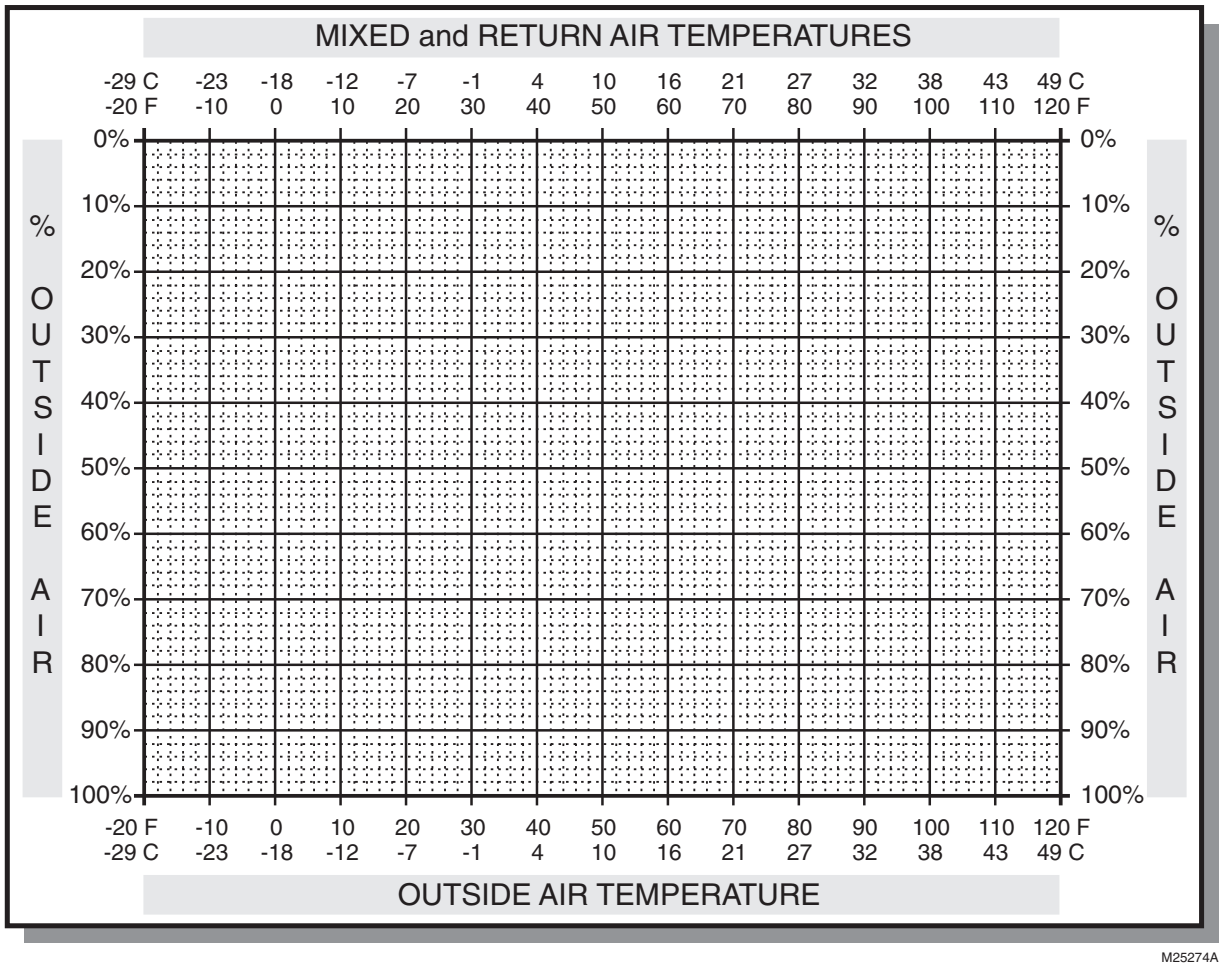

This chart can also be used for measuring the percentage of outside air on an air handler. The same three temperatures are measured per the formulas on the preceding page. Lines are drawn on the chart using a ruler. As with the formulas this chart is most effective if there is at least a 10 degree F difference between the return and outside air. This will typically require either a warm or cold day rather than moderate weather. It is more accurate to measure outside air percentage on a day when the outside temperature is 10°F (-12°C) rather than on a day when it is 70°F (21°C). If the temperature difference between the return and outside air is only a few degrees, a small error in measurements can alter the results by as much as 50% using this method. If the temperature difference is 40 or 50°F (22 or 28°C) small errors in measurement do not substantially affect the results of the calculations.

Example 1: Using the Outside Air Percentage Chart

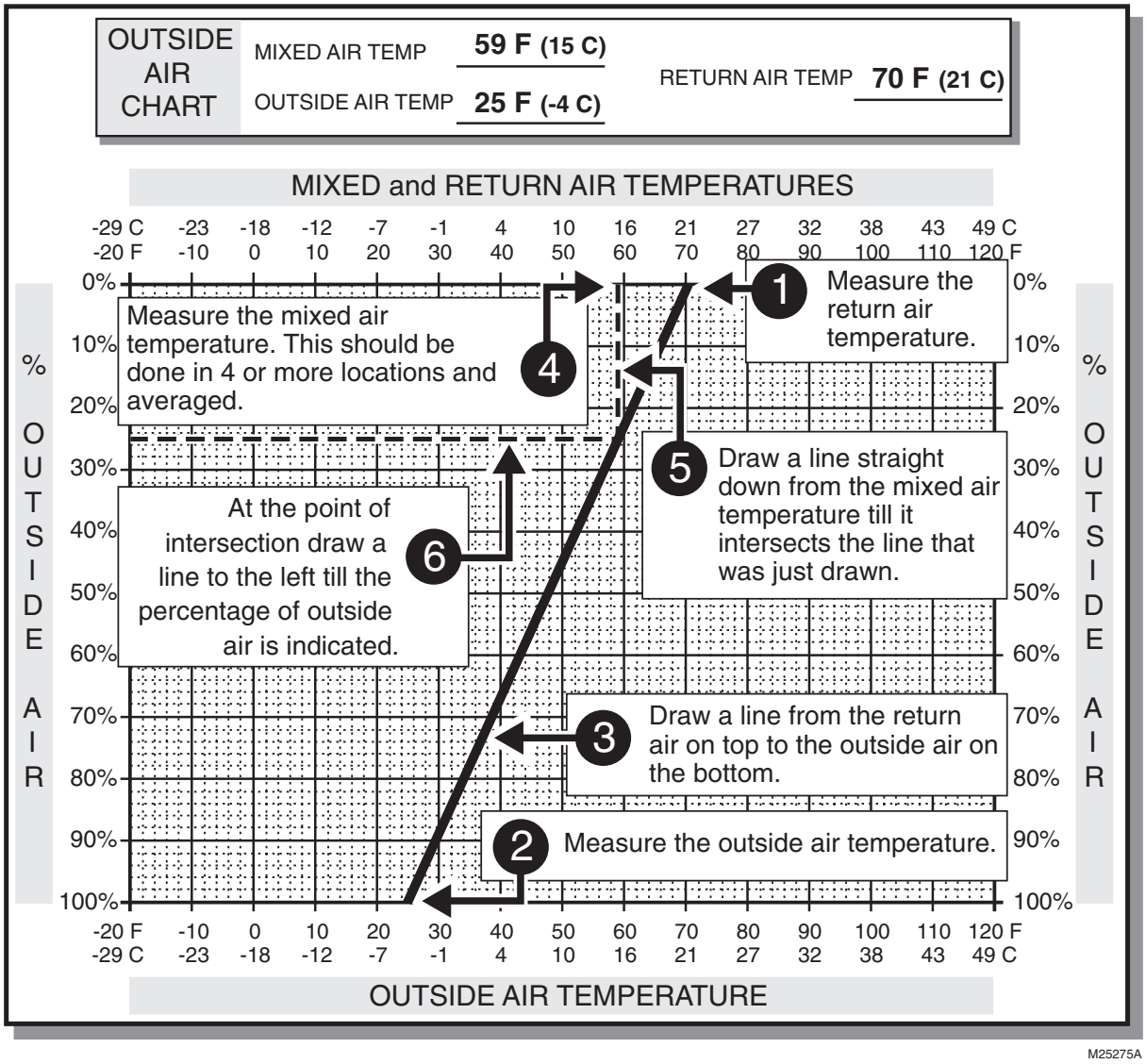

M25275A

1. Measure the return air temperature.
2. Measure the outside air temperature.
3. Draw a line from the return air temperature to the outside air temperature.
4. Measure the mixed air temperature in multiple locations and determine the average.
5. Draw a line down from the mixed air temperature to the point where it intersects the first line.
6. Draw a line from the point of intersection to the outside air percentage on the left side of the chart.

According to the results from this chart this air handler is supplied with 26% outside air. If the total supply volume is 20,000 cubic feet per minute (cfm) (566 m^3/min) then:

0.26 X 20,000 cfm of total supply air equals 5,200 cfm of outside air (147 m^3/min).

This indicates that when the measurements were done on this air handler the total volume of outside air in the mixed air was 5,200 cfm of outside air (147 m^3/min).

Example 2: Use of Outside Air Chart on a Warm Day

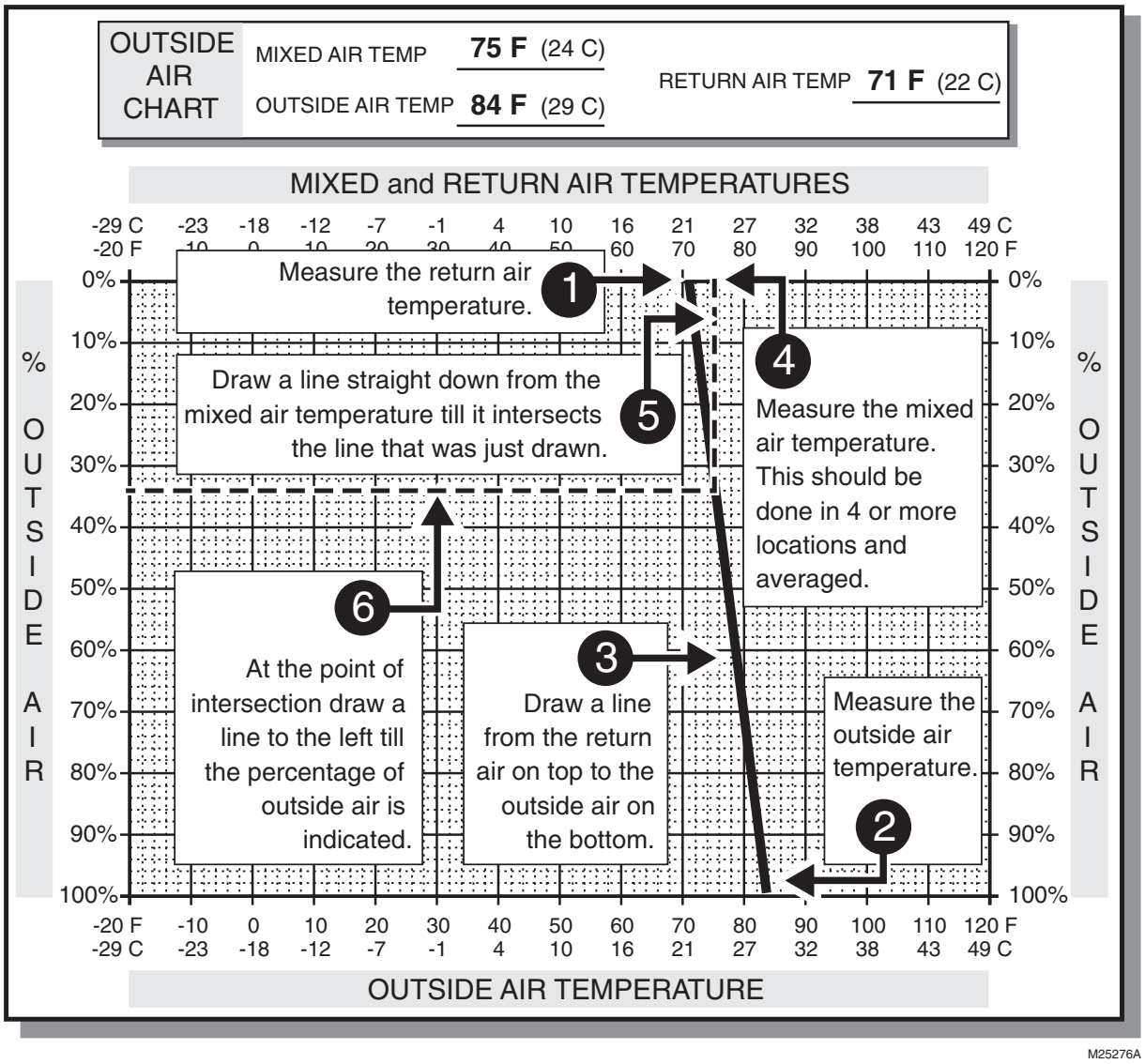

The chart can also be used on a warm day when the outside air temperature exceeds both the return and the mixed air temperatures. The first line drawn will slant in a different direction. Once again it is best to do this test when there is a minimum of 10 degrees F difference between the outside and return air.

Extra Outside Air Percentage Chart

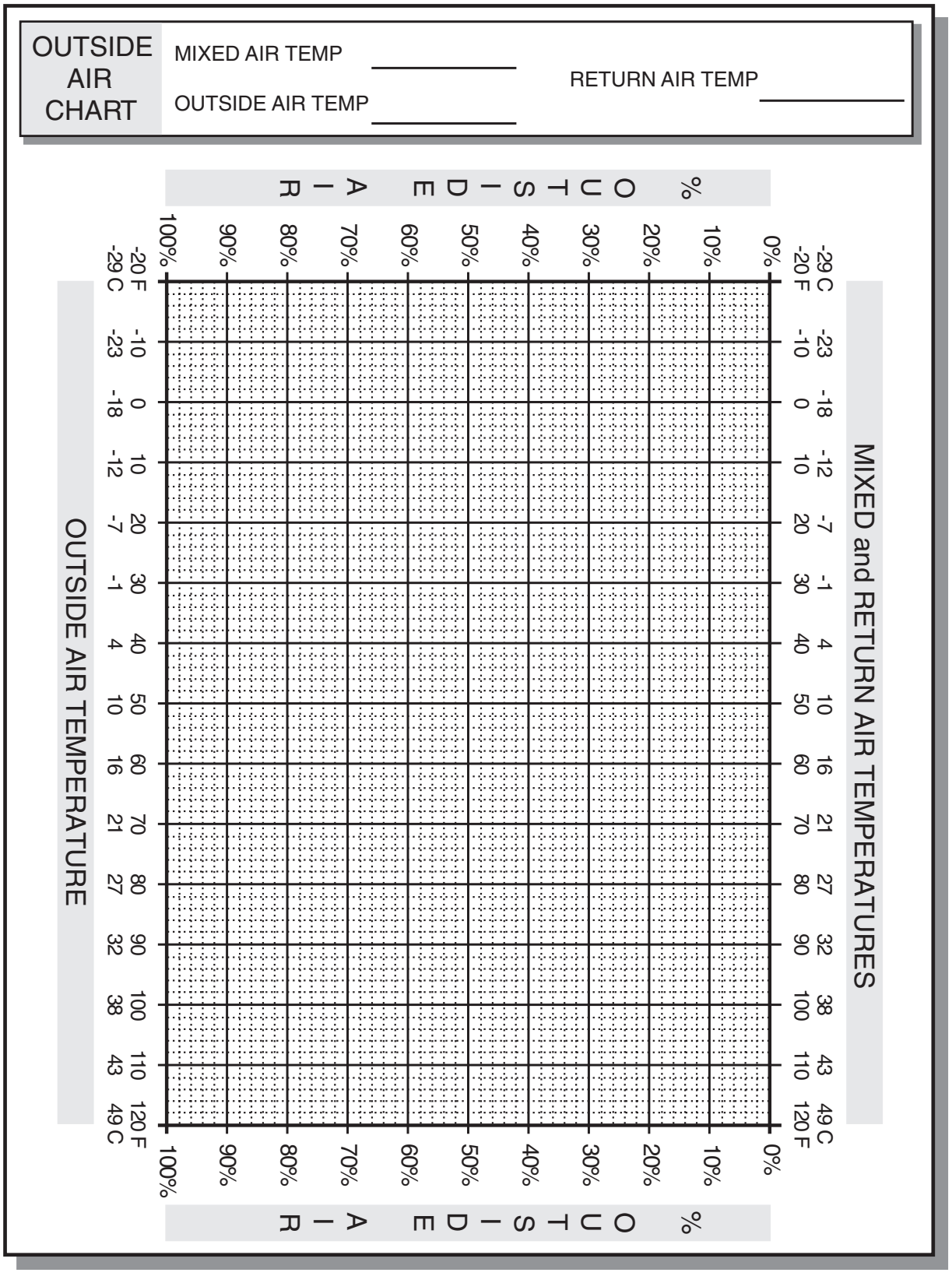

M25277A

Example 3: Minimum Ventilation Adjustment

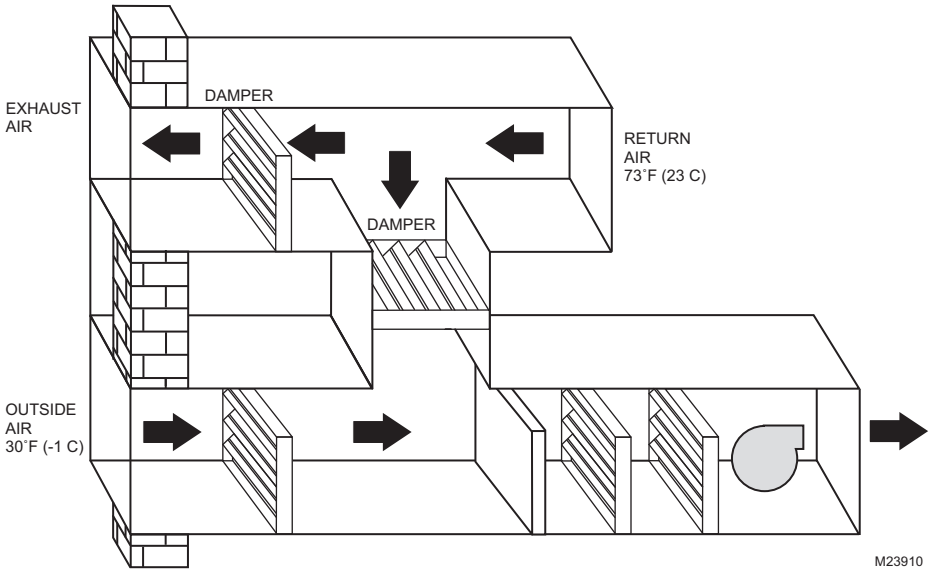

1. **Specifications:**
   Office space - 100,000 ft^2
   Air handler capacity 20,000 cfm (566 m^3/min.)
   People in area - 250
2. Ventilation (V_{OT}) required:
   = 250 x 5 cfm + 0.06 cfm/ft^2 x 100,000 ft^2
   = 1250 cfm + 6000 cfm
   = 7250 cfm
   Where V_{at} = 0.06 cfm/ft^2 x 100,000 ft^2.
   Therefore V_{at} = 6000 cfm
3. Ventilation percentage:
   7250 cfm (205.3 m^3/min)/20,000 cfm (570 m^3/min)
   V_{OT} maximum position= 36%

   6000 cfm (169.9 m^3/min)/20,000 cfm (570 m^3/min)
   V_{OT} Minimum position= 30%
4. Measure the return air temperature:
   73°F (23°C).
5. Measure the outside air temperature:
   30°F (-1°C).

This example shows a procedure for adjusting the DCV maximum and minimum positions.

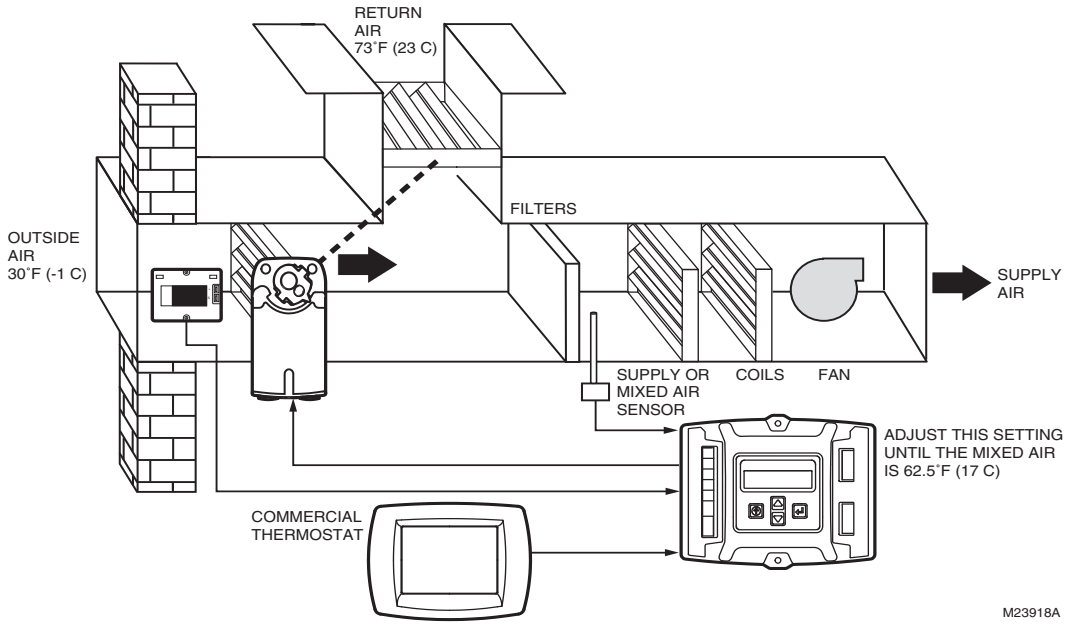

[Return Air Temperature X % of Return Air] + [Outside Air Temperature X % of Outside Air] = Temperature of Mixed Air

6. Use the mixed air temperature formula or the graph to determine the Demand Control Ventilation maximum MAT:

[73°F (23°C) X 64%] + [30°F (-1°C) X 36%] = Temperature of Mixed Air

46.7°F (8.2°C) + 10.8°F (-11.8°C) 57.5°F (14.2°C)

7. Use the mixed air temperature formula or the graph to determine the minimum position MAT:

[73°F (23°C) X 60%] + [30°F (-1°C) X 30%] = Temperature of Mixed Air

43.8°F (8.2°C) + 12°F (-11°C) 55.8°F (13.2°C)

8. Close the outside air dampers. The method used for this depends upon the controller being used.
9. When using analog economizers, turn the DCV maximum position control (pot) until the measured mixed air temperature is 57.5°F (14.2°C). When using the JADE™ controller, go to the set point menu and adjust the Vent max setting and the up and down arrows on the keypad.
10. Mark this setting on the control as being 36% outdoor air.
11. Close the outside air dampers. On the analog economizers, turn the minimum position control (pot) until the measured mixed air temp is 55.8 °F (13.2°C). When using the JADE™ controller, go to the set point menu and adjust the Vent min setting using the up and down arrows on the keypad.
12. Mark this setting on the control as being 30% outdoor air.

Example 4: Ventilation Review Questions

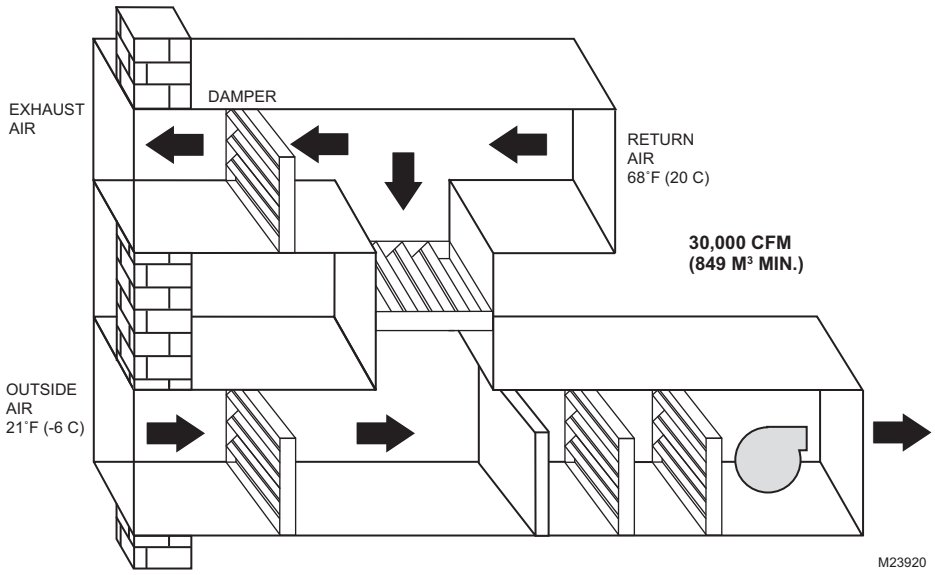

1. **Specifications:**
   Office space - 200,000 ft^2.
   Air handler capacity - 30,000 cfm (849 m^3/min)
   People in area - 350
2. Ventilation required:
   =350 x 5 cfm per person + 0.06 cfm/ft^2 x 200,000 ft^2
   =1750 cfm + 12,000 cfm
   =13750 cfm
3. Ventilation percentage:
   13750 cfm (389.4 m^3/min)/30,000 cfm (849 m^3/min)
4. Measure the return air temperature: 68°F (20°C)
5. Measure the outside air temperature: 21°F (-6°C)

This is the air handler for an office building with 350 people maximum occupancy. Complete the required steps in the procedure to adjust the controls for the correct volume of ventilation.

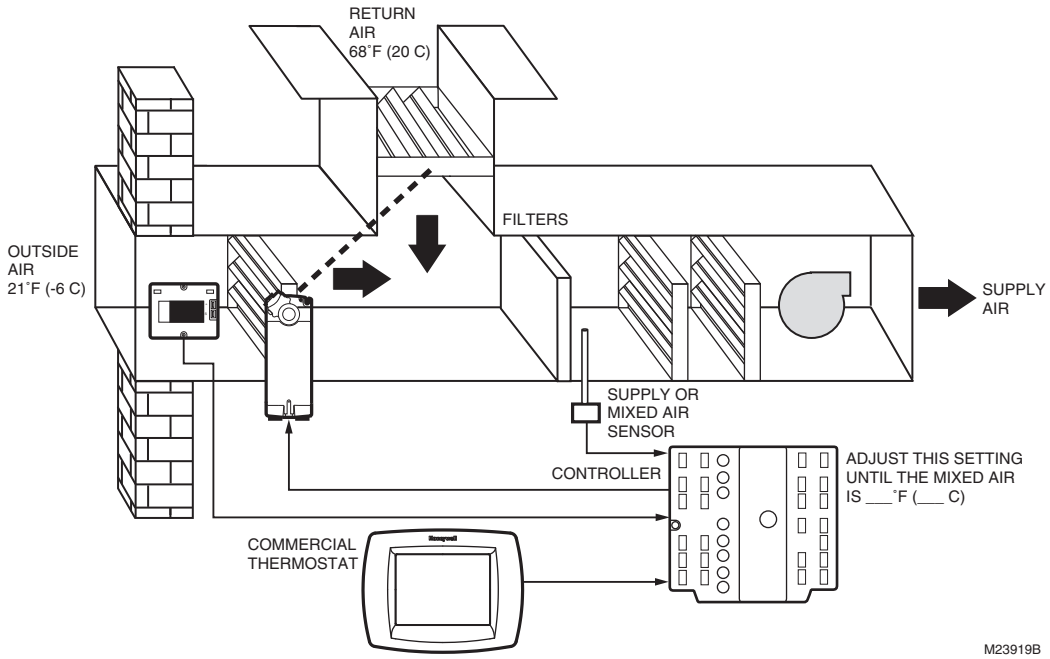

[Return Air Temperature] X [% of Return Air] + [Outside Air Temperature] X [% of Outside Air] = Temperature of Mixed Air

6. Use the mixed air temperature formula or the graph:

[68°F (20°C) X ____%] + [21°F (-6°C) X ____%] = Temperature of Mixed Air

_____°F (____°C) + _____°F (_____C) _____°F (____°C)

NOTE: Note use this formula to determine DCV maximum MAT and Minimum position MAT.

7. Close the outside air dampers to the minimum position.
The method used for this depends upon the controller being used.

8. On analog economizers, turn the DCV maximum control (potentiometer) until the measured mixed air temperature is _____°F (_____°C). When using the JADE™ controller, go to the set point menu and adjust the Vent max setting using the up and down arrows on the keypad.

9. Mark this setting on the control as being 36% outdoor air.

10. On analog economizers, turn the minimum position until the measured mixed air temperature is _____°F (_____°C). When using the JADE™ controller, go to the set point menu and adjust the Vent min setting using the up and down arrows on the keypad.

11. Mark this setting on the control as being _____% outdoor air.

12. Restore all settings and setpoints.

Economizer Cycle Definition

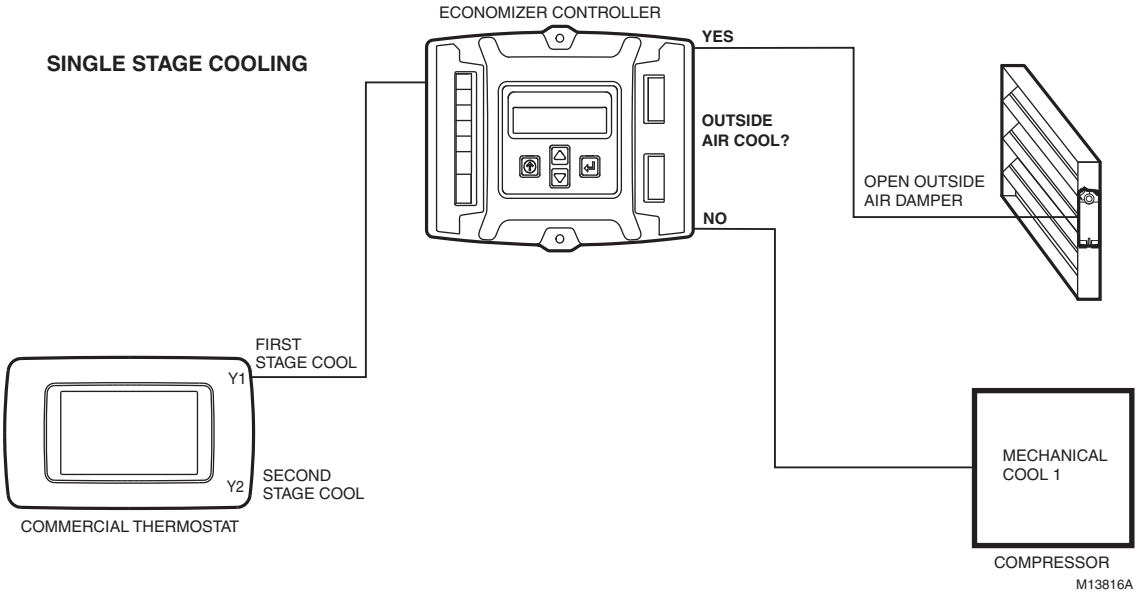

On a First Call for Cooling From Commercial Thermostat (Y1)

Controller signal is routed to the economizer logic module.

IF THE OUTDOOR AIR IS SUITABLE FOR FREE COOLING:

With analog economizers the actuator modulates the outdoor damper open until the room temperature is cool enough to satisfy the call for cooling and maintain the mixed or discharge air between 50 and 55°F (10 and 13°C). With the JADE™ controller the actuator modulates the OA damper open to maintain the MAT setpoint. The MAT default is 53F with a 2F differential. The MAT setpoint can be changed in the menu using the up and down arrows on the JADE™.

When the mixed or discharge air is between 50 and 55°F (10 and 13°C) the actuator will hold damper position with analog economizers, with JADE™ the actuator will hold the temperature between -1F and +1F of the MAT setpoint. For example if the MAT is set to 53F, the damper will hold between 52F and 54F.

When the mixed or supply air goes below 50°F (10°C) the damper is modulated towards closed (52°F for JADE™ in our example).

When the mixed or supply air goes above 56°F (13°C) the damper is modulated towards open (54°F for JADE™ in our example).

For the analog economizers the MAT setpoint is not adjustable, the range can be changed using external resistance. For the JADE™, the MAT is adjustable between 38°F and 70°F.

IF THE OUTDOOR AIR IS NOT SUITABLE FOR FREE COOLING:

The first stage of the cooling compressor is turned on and the dampers are set to minimum for occupancy requirements (V_{at} if using DCV, V_{OT} if no DCV).

Single and Two Stage Cooling With Economizer

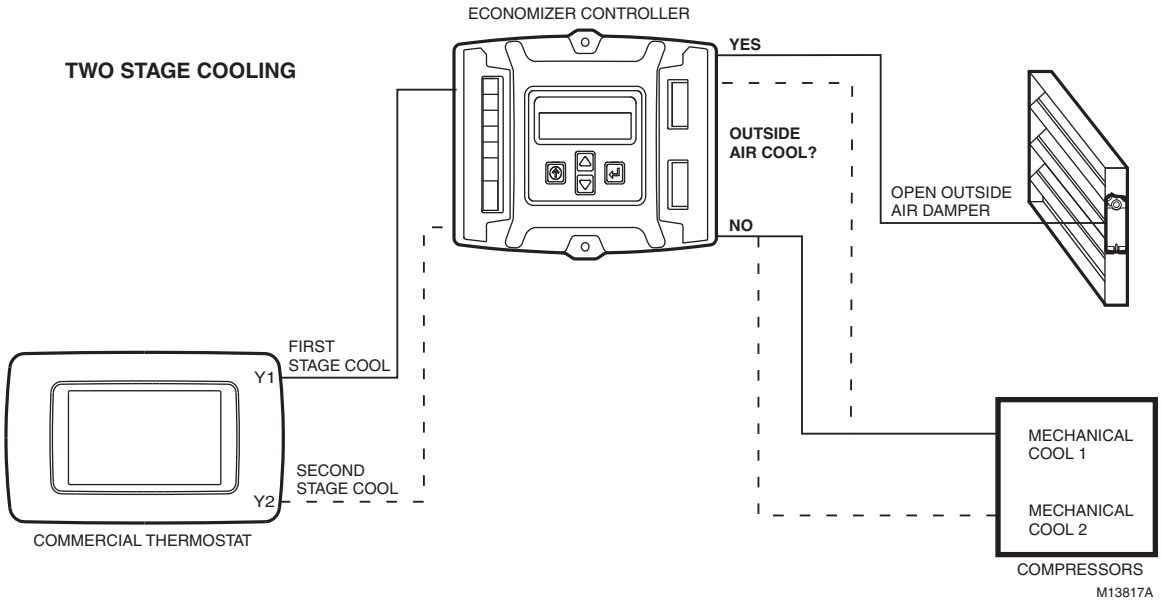

On a Call for Second Stage Cooling

Controller signal is routed to the economizer logic module.

IF THE OUTDOOR AIR IS SUITABLE FOR FREE COOLING AND THE OUTSIDE AIR DAMPERS ARE OPEN:

The economizer logic turns on the first stage of mechanical cooling for the second stage of cooling required by the commercial thermostat. With JADE™ the actuator drives the OA damper wide open to try to satisfy the call for second stage of cooling. If OA dampers are 100% open and call for second stage is not satisfied then the JADE™ will turn on the second stage mechanical cooling and the OA damper will remain wide open.

NOTE: JADE™ has an option in the Advanced setup menu "STG3 DLY" which is a delay after the stage 2 for cooling has been active for a programmed amount of time. If the space has not been satisfied after the programmed amount of time, the JADE™ turns on the 2nd stage of mechanical cooling to allow 3 stages of cooling, 1 economizer and 2 mechanical. This feature can also be turned off.

IF THE OUTDOOR AIR IS NOT SUITABLE FOR FREE COOLING:

The first stage cooling compressor is on, and the logic module turns on the second stage of mechanical cooling.

NOTE: A commercial thermostat with a minimum of two stages of cooling is required. The first stage must be available for economizing if outside air is suitable.The OA dampers must be opened completely on a second call for cooling before the mechanical cooling is turned on.

Section 2 - Enthalpy Theory And Controllers

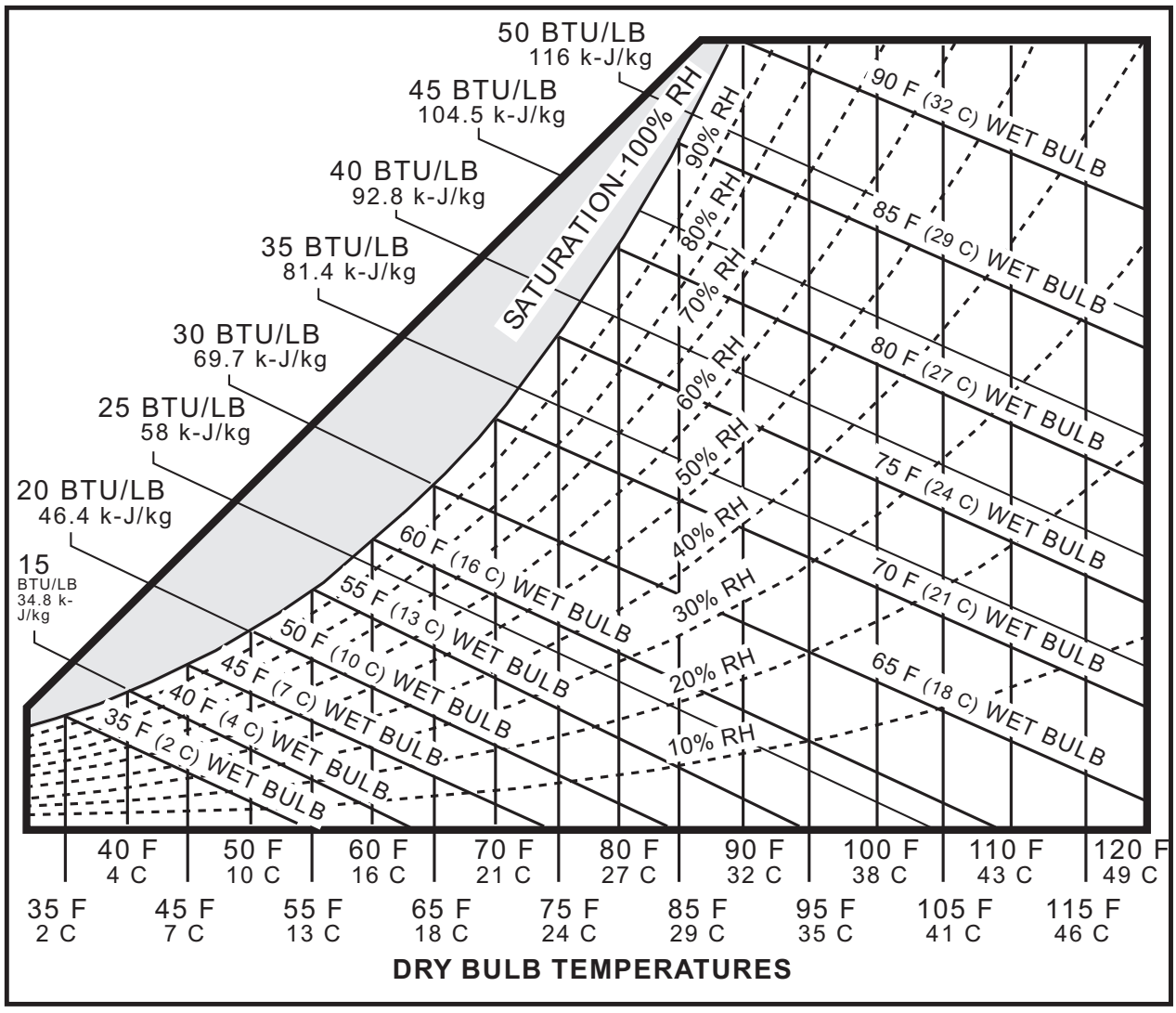

M25280

The Psychrometric Chart

This is a psychrometric chart. To use the chart effectively the thermodynamic properties of air must be known. Some common terms are:

Dry Bulb Temperature

The temperature read directly on an ordinary thermometer.

Wet Bulb Temperature

The temperature read on a thermometer whose bulb is encased in a wet wick and with air blown across the wick at 900 ft. per minute (274 meters per minute). The evaporation of the water causes the temperature to drop, this may also be referred to as the “evaporation effect.” When the temperature stops falling that is the wet bulb temperature. The sling psychrometer is a common instrument used to determine the wet bulb temperature although there are other methods now available.

Dry bulb and wet bulb are the two most readily measurable variables on the chart and when known can be used to determine all other properties on the psychrometric chart.

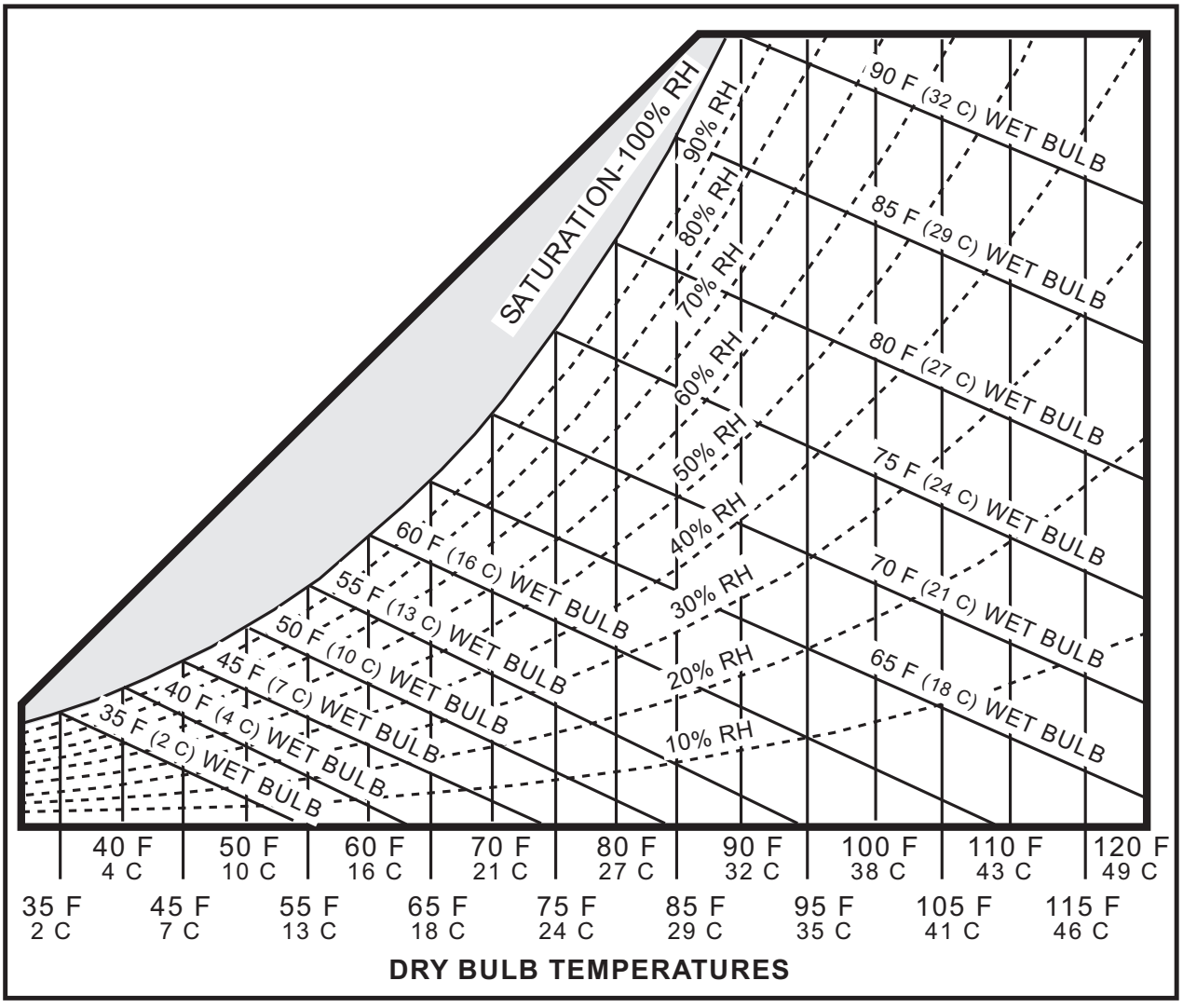

M25278

Relative Humidity and Saturation

Relative Humidity

Relative Humidity is the ratio of the measured amount of moisture in the air to the maximum amount of moisture the air can hold at the same temperature and pressure. Relative humidity is expressed in percent of saturation. Air with a relative humidity of 35%, for example, is holding 35 percent of the moisture that it is capable of holding at that temperature and pressure.

Saturation

The point at which the relative humidity reaches 100% and no more moisture can be contained in the air is the saturation point. The relative humidity and saturation lines are the only curved lines on this psychrometric chart.

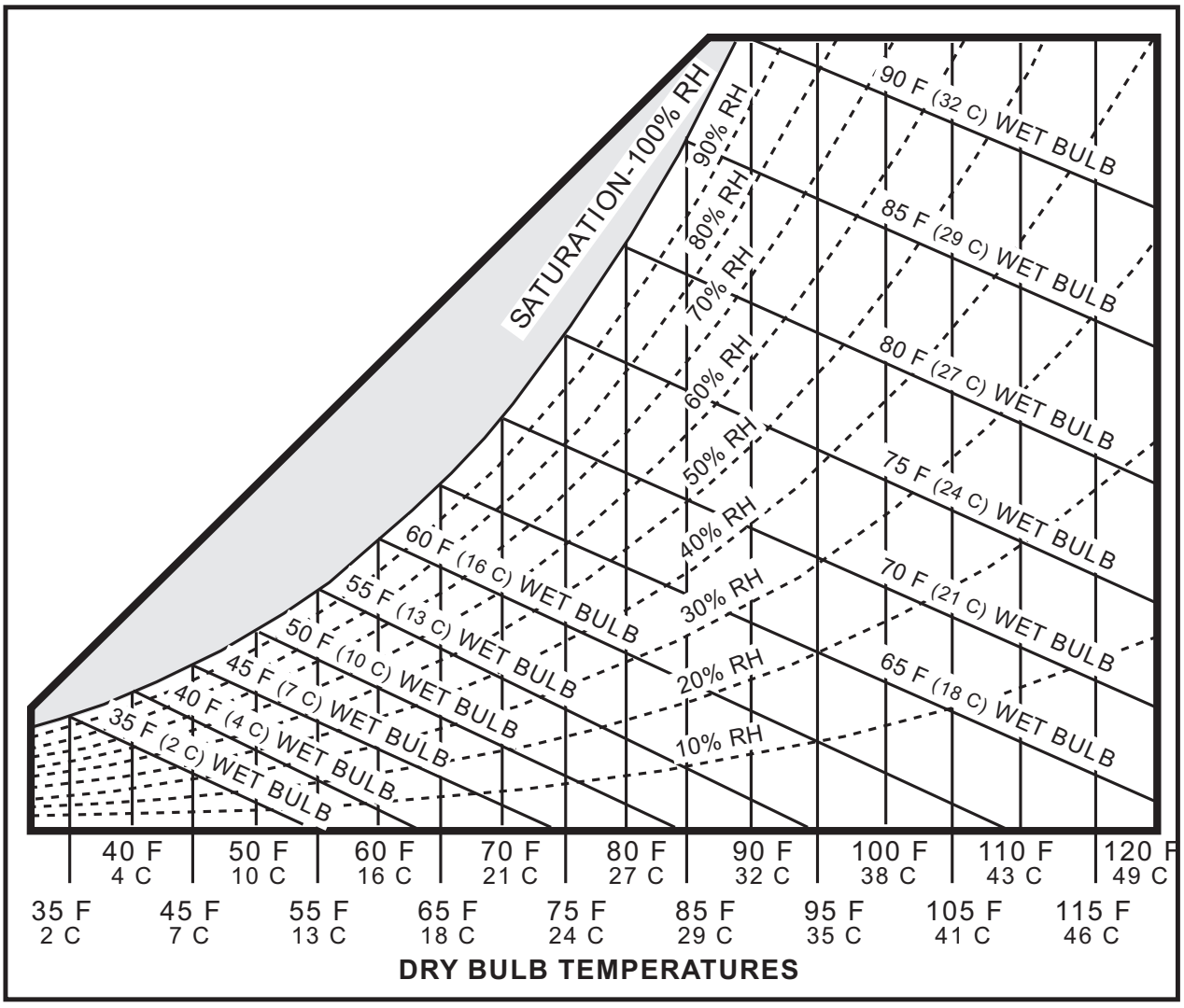

M25279

Enthalpy

The measure of heat used in the United States today is the British Thermal Unit or BTU. This is the amount of heat required to raise the temperature of one pound of water by one degree Fahrenheit. A metric unit is the joule. There are 1055 joules per BTU.

Sensible Heat

Heat that changes the temperature of the air without changing its moisture content or dew point temperature is sensible heat. Heat added by a heating coil is sensible heat. Heat removed by a cooling coil that remains dry is also sensible heat.

Latent Heat

Heat required to change water to vapor (steam) without change in temperature or pressure is latent heat. It is also called heat of vaporization. When water is vaporized the latent heat passes into the air, and when vapor condenses, latent heat is removed.

Total Heat (Enthalpy)

The sum of sensible and latent heat and is commonly referred to as enthalpy. Enthalpy is often referred to as the total heat content of the air.

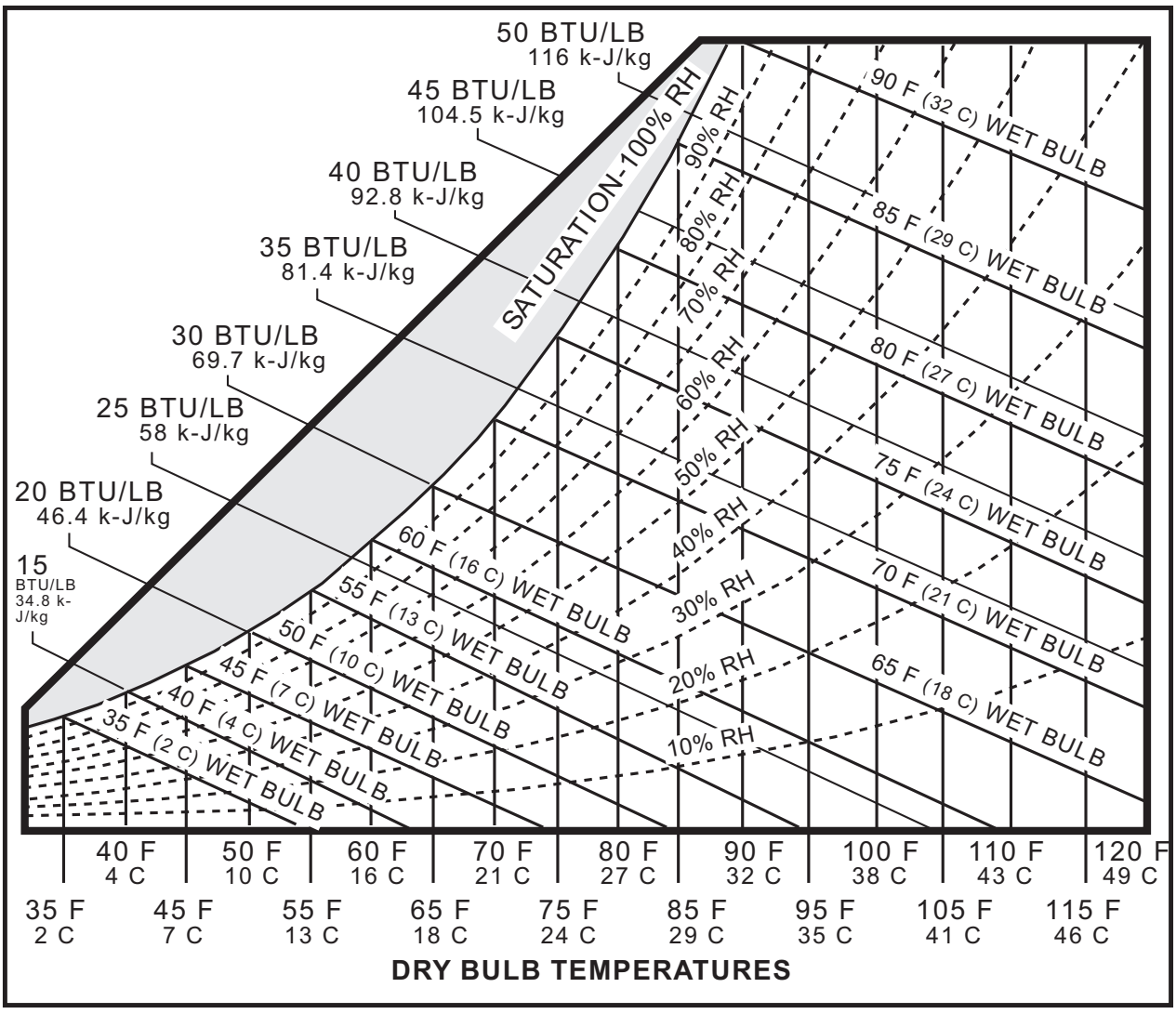

M25280

Psychrometric Chart of Enthalpy Economizer Control

A standard dry bulb economizer discussed earlier causes the air handler to switch over from outside air to return air at the setpoint of the outside air high limit. This will vary based on the climate. According to ASHRAE 90.1, the changeover temperatures for the US are 65F, 70F and 75F based on the region of the country. Dry bulb economizers only control the outside air dampers based on temperature. If it is a cool but rainy day, the outside air will be brought in and extra cooling capacity will be required to dehumidify it or the humidity will be released into the ducts or occupied space. Enthalpy economizers take temperature and humidity into account. With enthalpy control, humid air below a conventional dry bulb temperature setpoint is locked out. Cooling costs are lowered in most climates when using enthalpy instead of dry bulb temperature with the economizer.

Single Sensor Enthalpy Control

There are two enthalpy control strategies available: single and differential enthalpy control.

The single enthalpy control uses one enthalpy sensor located in the outdoor air in any orientation that exposes it to freely circulating air and protects it from rain, snow and direct sunlight. The enthalpy sensor replaces the dry bulb high limit used in a standard economizer. Instead of switching the mixed air control loop from outdoor to return air at a preset outdoor air dry bulb temperature, on a call for cooling from the controller or commercial thermostat the economizer logic module compares the outdoor enthalpy to a preselected setpoint. The value of the setpoint is illustrated on the psychrometric chart on page 57 with curves labeled as A, B, C or D. The setpoint selected will vary based on climate, activities in the controlled area and the type of mechanical equipment used to provide cooling. An installer can choose a more aggressive setpoint A for more free cooling or a conservative setpoint D for less free cooling. Care needs to taken to select the correct curve for comfort and to control the humidity to prevent indoor air quality and other issues caused by high humidity in a building. The mixed air sensor, located in the area where the return and outdoor air mix, maintains the mixed air temperature between 50 and 56°F (10.0 and 12.8°C). When using the JADE™ the analog curves are changed to control to dry bulb temperature, enthalpy and dew point based on ES boundaries as shown on modified psychrometric chart and table on page 57.

JADE™ controls to a +/-1F differential versus the 50-55F range of an analog economizer.

SINGLE SENSOR OR HIGH LIMIT ENTHALPY

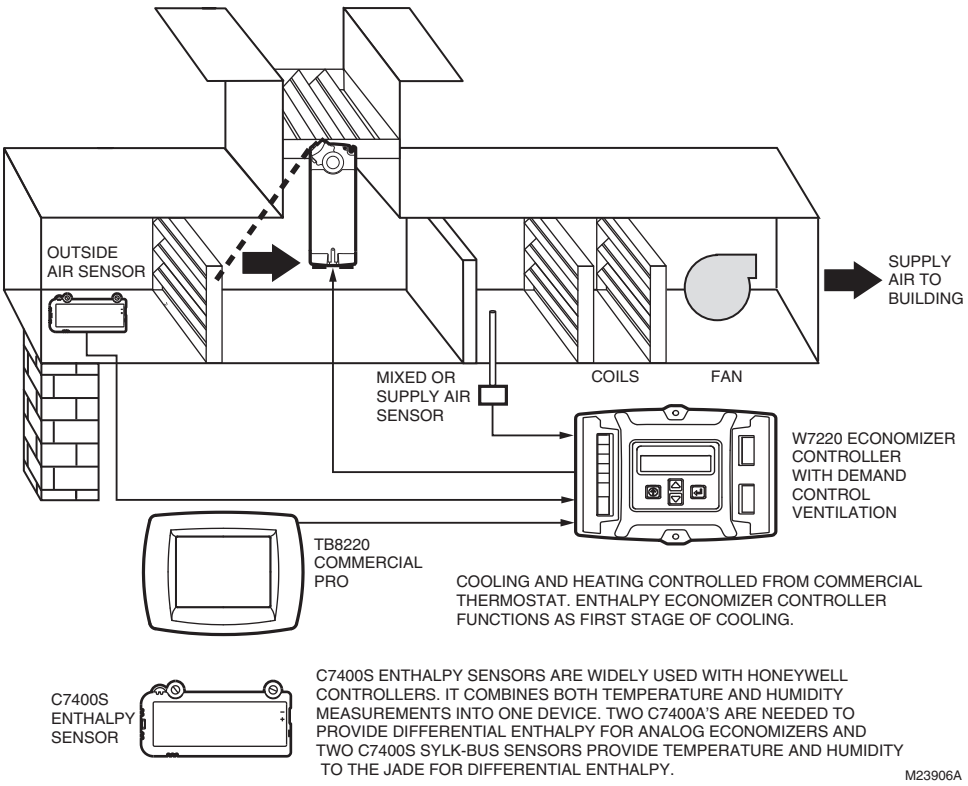

Two Sensor or Differential Enthalpy

A dual sensor enthalpy control is equipped with the same outdoor air enthalpy sensor and an additional second enthalpy sensor in the return air. This is also referred to as differential enthalpy. On a call for cooling or when the mixed air temperature goes above the high MAT range or setpoint, additional air with the lower enthalpy, outdoor or return, is selected to be brought into the conditioning section of the air handler. For analog economizers the setpoint on the logic module is turned to D whenever differential enthalpy is used. This is a very efficient method of controlling outdoor air usage since the return and outside air comparison is continuous and automatic year-round. It eliminates operator error by eliminating seasonal changeover which is frequently overlooked. Though it may appear wasteful to cool outdoor air at a higher dry bulb temperature than return air, the savings are verifiable through psychrometric calculations. The amount of mechanical cooling required to dehumidify air often exceeds the amount required to lower the dry bulb temperature. In buildings where there is a substantial amount of cooking, laundry or other moisture generating activity this type of control sequence can result in substantial savings in cooling costs.

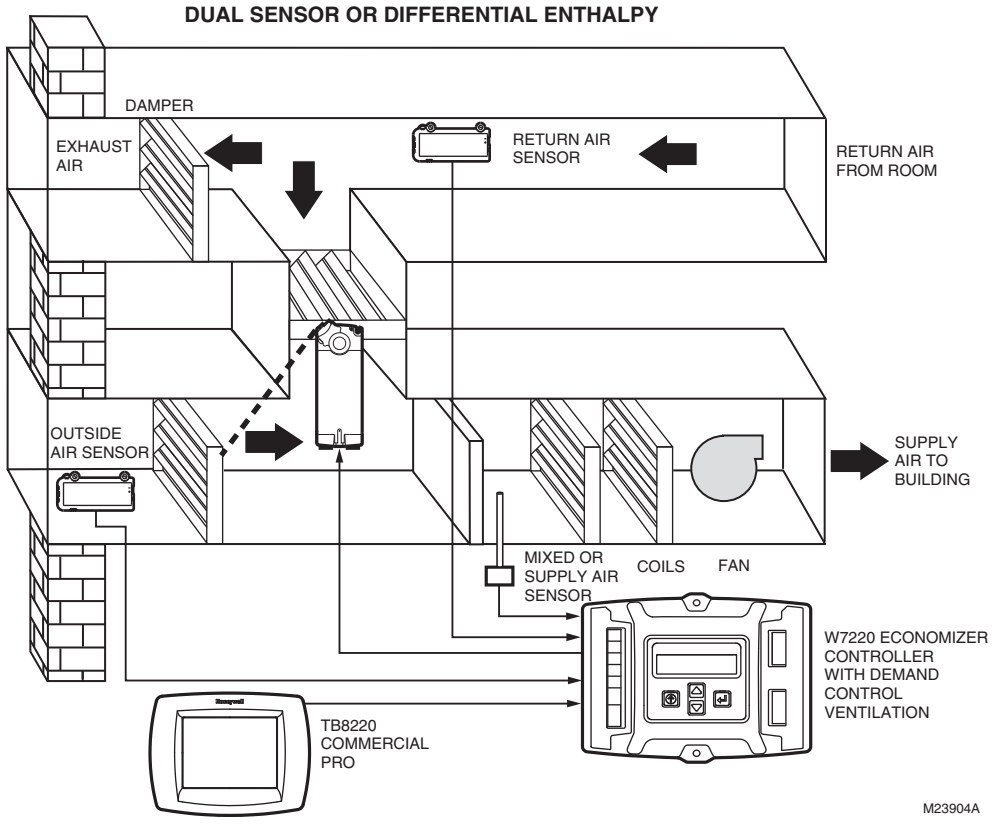

Enthalpy Control with Carbon Dioxide Sensor

Most building codes allow for the option of carbon dioxide sensor-based demand control ventilation (DCV) to determine the human occupancy level of the space. Honeywell supplied controllers that combined this function with the economizer function. They were the W7212, W7340, W7460, and the W7215 economizer logic modules. All of these logic modules had inputs for a room indoor air content sensor. Additionally the W7215B was available with outdoor air content sensor inputs. The W7215 and W7212 were designed to be used with series 72 actuators and the W7460 with the M7415 actuator. The W7340 was designed to be used with an OEM system because it requires external relays to switch to compressor and communicates with the OEM system controller via a modified modbus protocol. In addition to the indoor sensor based demand control ventilation option, these logic modules had additional features including:

- Maximum damper position adjustment (DCV max).
- Exhaust fan setpoint.
- Occupied and Unoccupied operation.
- W7213 and W7214 are heat pump models.

The JADE™ controller replaced the analog economizers in new applications. The JADE™ is a digital economizer and incorporates many features and functions that were not availably on the analog sensors. See section 11 for the JADE™ controller.

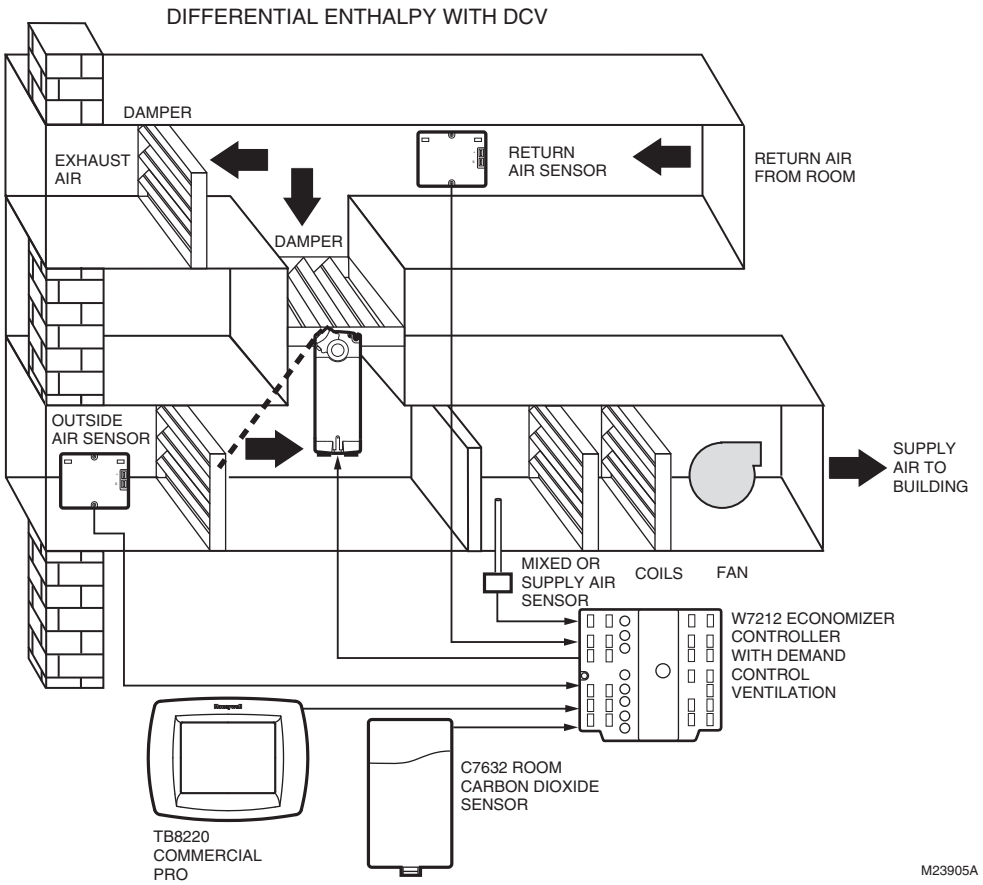

Section 3 - Types of Analog Economizers

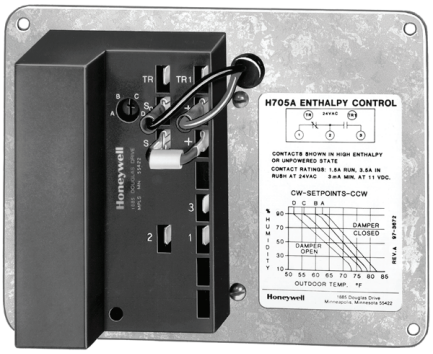

There were a number of Honeywell analog enthalpy economizer modules developed since the early 1960s. Most can be replaced by the JADE™ controller. They varied based on the actuator control series, mixed air circuitry and enthalpy sensor configuration.

H705

Commercial thermostat

Separate Series 70 or 90 mixed air controller

Mod IV actuator

Optional second enthalpy sensor

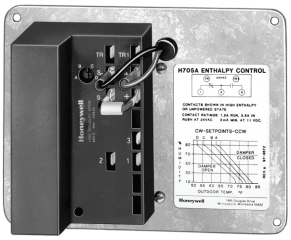

H705 on plate, one enthalpy sensor on back

The H705 was the base controller since the mixed air circuitry was not included. Its function was to provide SPDT high limit switching in a separate mixed air control circuit, typically series 90. It replaced the H205 without substantial wiring modifications and could also be used in control circuits with other company's devices if a SPDT economizer high limit was applicable.

W7459

Commercial thermostat

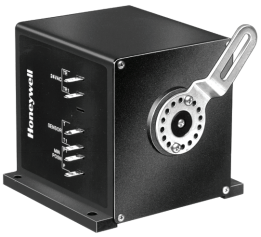

M7405, M7415 or M8405 actuators only

One enthalpy or dry bulb and one mixed/supply air sensor required. Second enthalpy sensor optional.

W7459 install on actuator

The W7459 was similar to the H705 in that only the enthalpy high limit function is provided and the mixed air control circuit is in the M7415 actuator. This restricted the W7459 use to the M7415, M7405 and M8405 actuators and it installed directly onto them. Unlike the H705 there was not a sensor built into the W7459 so wiring connections were required for one or two enthalpy sensors. It was also used with direct digital (W7459B), SPDT mixed air controllers (W7459C) or as a stand-alone mixed air controller with a mixed air sensor (W7459A or D).

W6210 and W7210

Commercial thermostat

Series 62 or 72 Actuator

One enthalpy or dry bulb and one mixed/supply air sensor required. Second enthalpy sensor optional.

W6210, W7210 install on flat surface

The W6210 and W7210 were used with Honeywell series 62 or 72 actuators. The mixed air control circuitry that was either separate or included in the actuator in the H705 or W7459 modules was included in these economizers. The options for enthalpy and mixed air sensors were the same as the W7459. The difference between the W7459 and the W7210 was the W7210 has the addition of the 2-10 Vdc out for controlling a series 70 DCA or foot-mounted motor, 24 Vac power and ground for the motor and the mixed air circuitry in the control. W6210 was used with floating series 62 motors.

W6215, W7215 and W7460

Commercial thermostat

Series 62 or 72 or M7415 Actuator

One enthalpy or dry bulb and one mixed/supply air sensor required. Second enthalpy sensor optional.

Optional room CO_2 sensor on A models, additional optional outdoor CO_2 sensors on B models.

W6215, W7215, W7460 install on flat surface

The W6215A, W7215A and W7460A economizer modules were similar to the W6210 and W7210 with the addition of inputs from a CO_2 sensor for Demand Control Ventilation and contact inputs and outputs to monitor and control various devices. The B models included inputs from an outdoor CO_2 sensor for the function of limiting outdoor air usage when the outdoor air was not suitable for ventilation. The actuators used with these controllers were:

- W6215 - Series 62
- W7215 - Series 72
- W7460 - M7415

W7212, W7213 and W7214

Commercial thermostat

One enthalpy or dry bulb and one mixed/supply air sensor required. Second enthalpy sensor optional.

W7212, W7213 and W7214 install on flat surface or mount on M7215 motor.

Series 62 or 72 Direct Coupled Actuators or M7215 Actuator

Optional room CO_2 sensor on A models, additional optional outdoor CO_2 sensors on B models.

The W7212 DCV economizer logic module was the simplest Demand Control Ventilation economizer model. It combined all of the benefits of the W7459 and W7210 with the added features of the W7215. It did not include shutdown, air change and purge but had an “N” terminal for occupancy. On W7213 and W7214 models the N terminal was a B or O terminal for use with heat pumps.

There were three models:

- W7212A- Used with series 70 actuators including DCA’s, M7215, and Modutrol Motors
- W7213A - Used with heat pumps or conventional rooftop units. B terminal energized in heating and unenergized in cooling
- W7214A - Used with heat pumps or conventional rooftop units. O terminal unenergized in heating and energized in cooling.

All models were panel mounted or directly mounted to M7215 motor.

W7340 and W7345

One enthalpy or dry bulb and one mixed/supply air sensor required. Second enthalpy sensor optional.

Optional room CO_2 sensor on W7340 models

W7340

W7345

W7340 and W7345 mount on flat surface or on a M7215 motor

The W7340 was a full enthalpy economizer used in an OEM unit to provide a totally integrated control system. The W7345 provided temperature (OAT) control only; it did not have an option for a return air sensor, DCV sensor or exhaust control.

The W7340A and B modules did not have the ability to set the outdoor air damper to a maximum position for DCV, they incorporated a minimum position setting that defaulted to 20% but could be overridden using the on-board pot or Modbus communication link to a maximum of 50% open.

If the CO2 sensor failed, the OA damper position would go to a position for maximum occupancy ventilation. If the minimum position set point was higher than the DCV maximum position, on sensor failure, the damper would drive to the higher of the two of DCV maximum and minimum position settings.

There was no limit on the damper position on a call from the CO_2 sensor (DCV). It could go 100% open.

Analog Economizer Features

Economizer Module Series	Enthalpy High Limit	DCV Sensor (Indoor)	OAQ Sensor (Outdoor)	Exhaust Fan Setpoint	Shutdown and Air Change	Purge	Motors Controlled	Specific Product Number
H705							Series 90	H705A1003
							Series 90	H705A2001
							Series 90	H705D1001
W7459							M7405	W7459B1009
							M8405	W7459C1007
							M7415	M7459A1001
	YES						M7415	W7459D1005
W6210							Series 62	W6210A1003
	YES						Series 62	W6210D1007
W7210							Series 72	W7210A1001
	YES						Series 72	W7210D1005
W6215		YES		Adjustable	YES	YES	Series 62	W6215A 008
W7215		YES		Adjustable	YES	YES	Series 72	W7215A1006
		YES	YES	Fixed	YES		Series 72	W7215B1004
W7460		YES		Adjustable	YES	YES	M7415	W7460A1008
		YES	YES	Fixed	YES		M7415	W7460B1006
W7212		YES		Adjustable			Series 72	W7212A1009
W7340		YES		Modbus			Series 72	W7340C1000
W7345		YES					Series 72	W7345B1001

Transformer Wiring Requirements for Analog Economizers

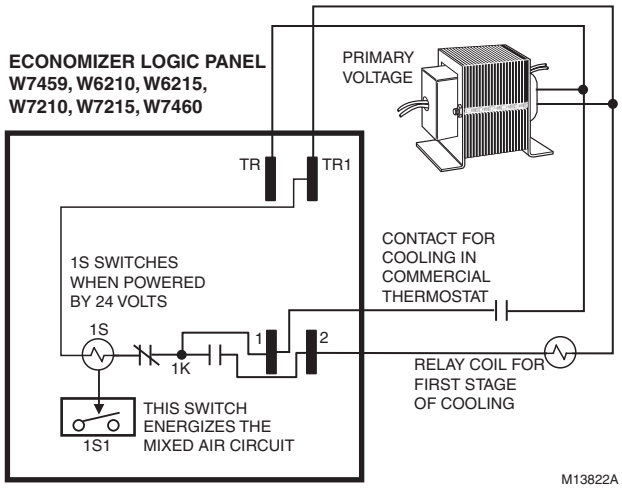

Economizer Panel Supplied With Same Transformer As Cooling Commercial Thermostat.

One of the most common misapplications of economizers is related to the field wiring. When the economizer will not open the dampers and it is really cool outside, check the wiring with the transformers. In analog economizers relay coil 1S is used to open the outside air dampers as the first stage of free cooling. To function properly 1S had to be wired to both sides of the same transformer. When the same transformer was used for supplying the commercial thermostat, cooling relay and the economizer logic module the switching occured correctly.

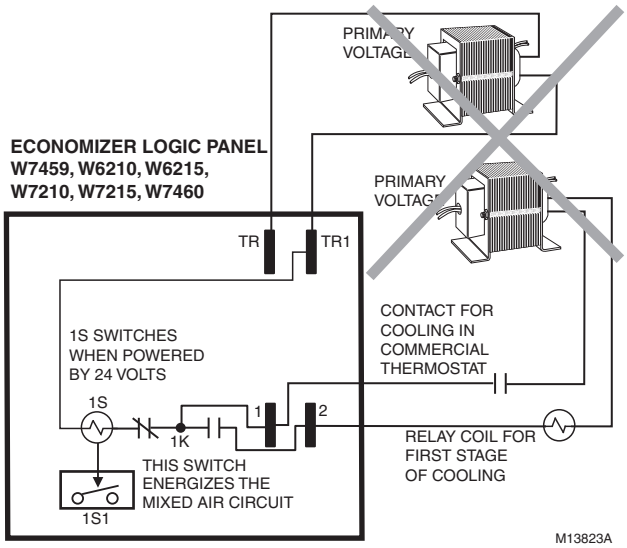

Economizer Panel Supplied With Separate Transformer From Cooling Commercial Thermostat.

24 Vac is supplied to the relay coil 1S in this application from two separate transformers. Though the first stage of cooling will switch correctly through the economizer module circuit, the relay coil 1S may not. Honeywell recommends use of a single, larger transformer for both the economizer logic module and the cooling commercial thermostat circuit.

When wiring any economizer it is very important that you read the notes on the correct wiring diagram. The wiring diagrams normally show the internal connections of the logic module to help guide you if you are concerned with the common side of the transformers.

A rule of thumb to follow any Honeywell electronic economizer logic module will have all terminals ending with a 1 as ground.

Section 4 - H705 Economizer Module

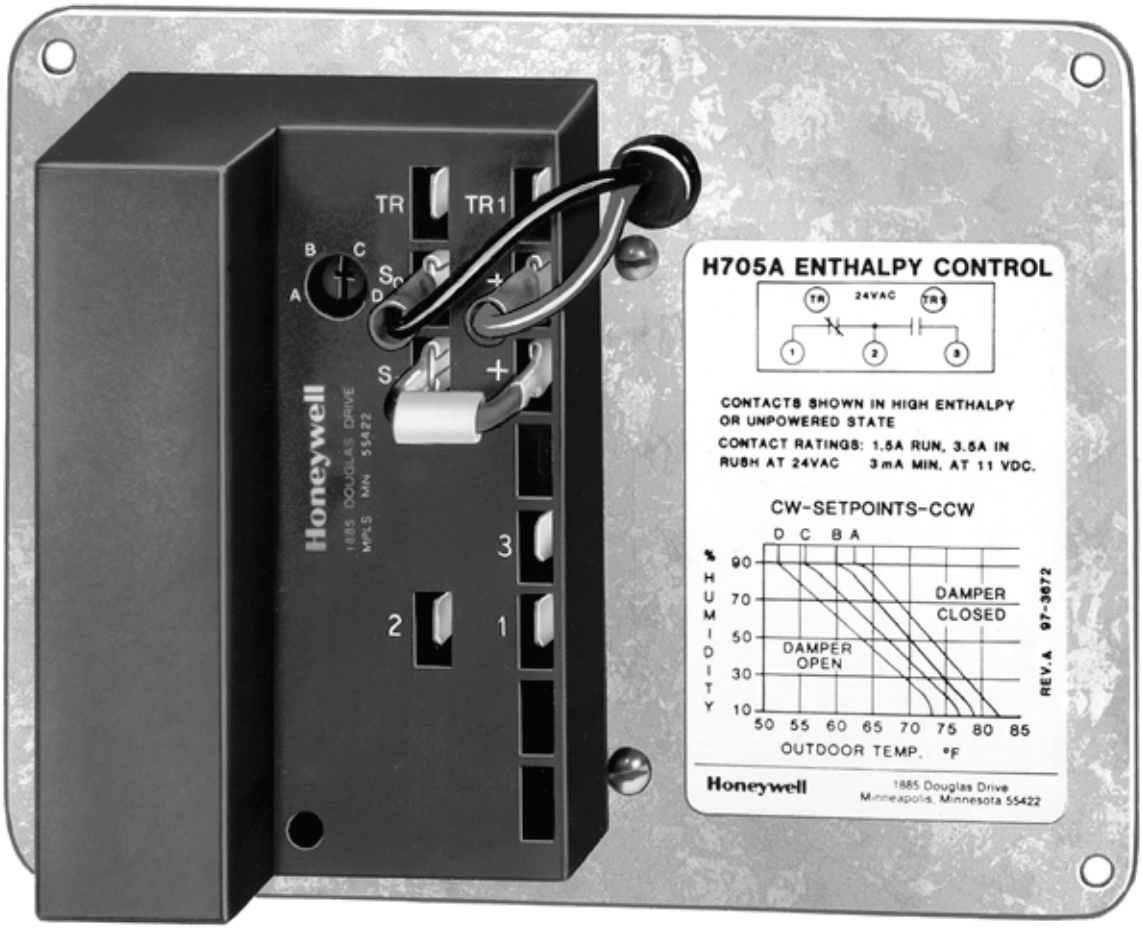

H705 Economizer Module

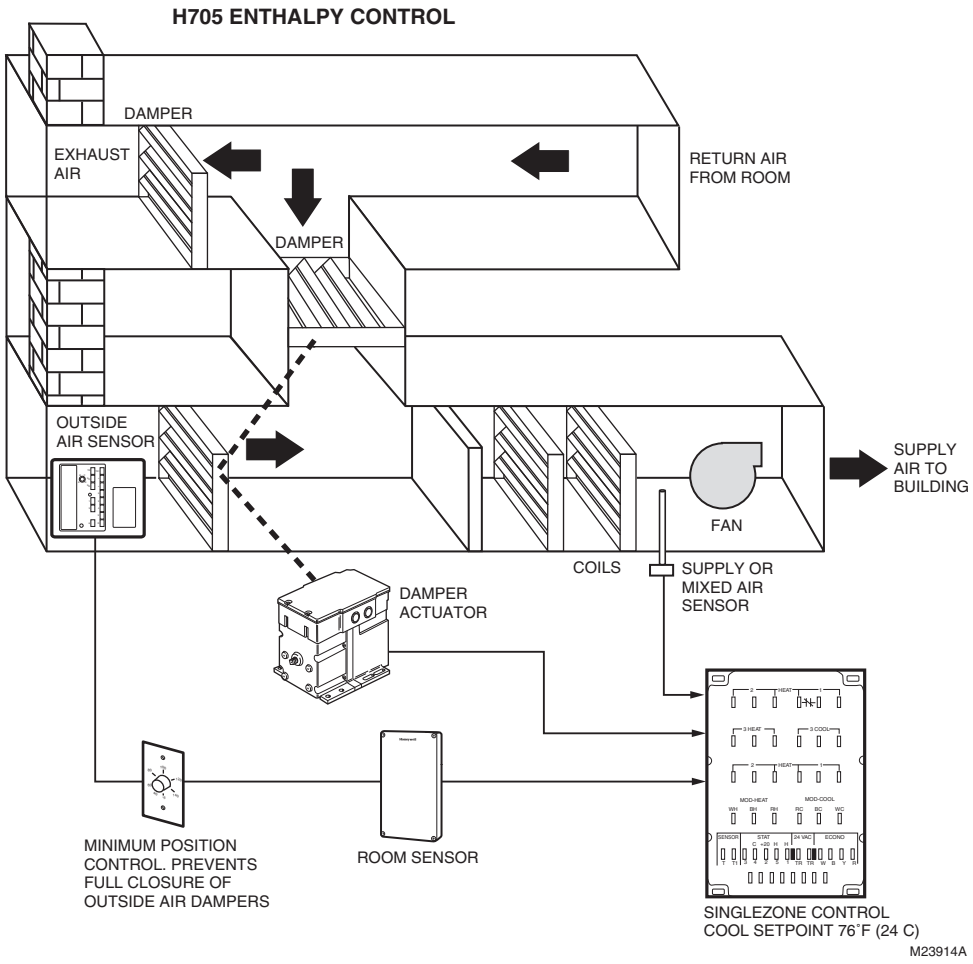

The H705 was the first Honeywell series of electronic economizer controllers. Prior to the development of the H705, an electromechanical device with a nylon humidity element, the H205, was the state-of-the-art controller. The H705 was a direct replacement for the H205. The output is the same SPDT switch which is typically wired into the mixed air circuit.

H705 Components

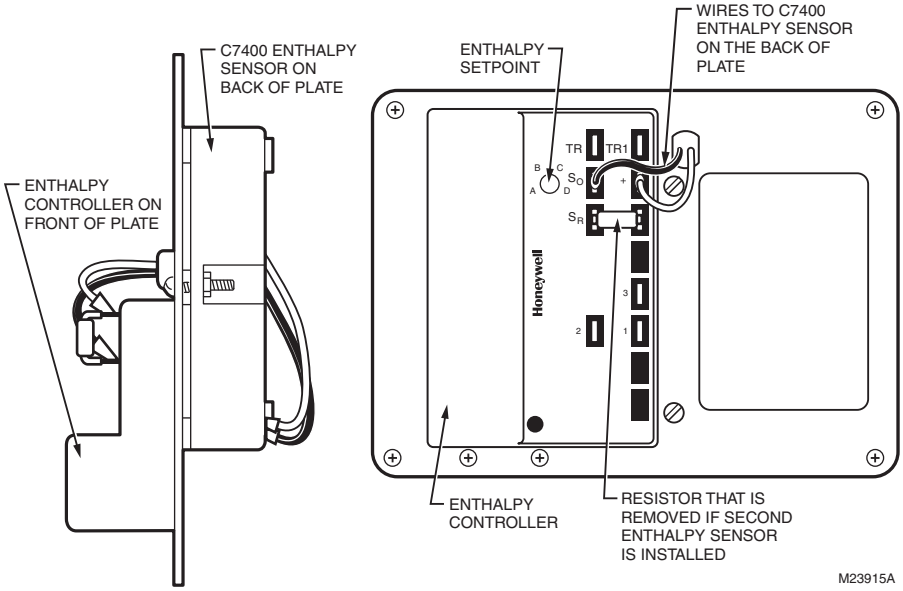

The H705A Enthalpy Controller base configuration was single sensor enthalpy controller but could be used for differential enthalpy. It was constructed of two devices: a solid state C7400 enthalpy sensor on one side of a metal plate and an enthalpy control on the other side. The device was located in the outside air stream with a recommended minimum velocity of 500 feet per minute (152 meters per minute). The setpoint scale is A, B, C and D. Each setting corresponds to an enthalpy curve with A equalling the highest enthalpy changeover and D being the lowest enthalpy changeover. The output of this control was an SPDT relay output used to switch the mixed air dampers from return to outside air and back as required for maximum efficiency.

H705 Enthalpy Setpoint

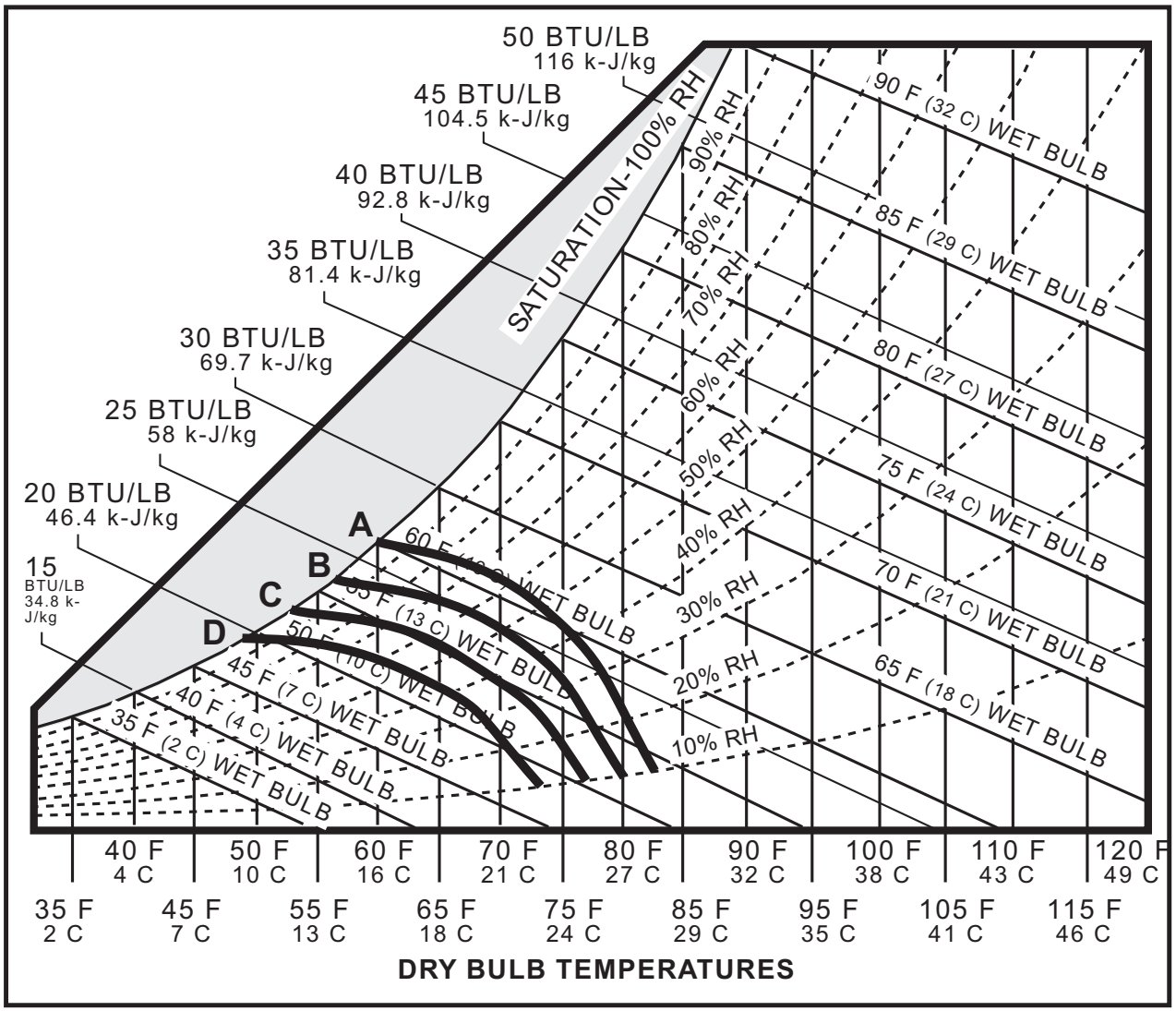

M25282

This psychrometric chart shows effects of the various analog economizer logic setpoints listed. This only applied to single enthalpy controllers not differential enthalpy. Air with conditions to the left of the curve is brought in from outdoors to be used for cooling. When the outdoor air conditions are to the right of the curve, the dampers will be set at minimum position for ventilation and the mechanical cooling energized. For differential enthalpy the setpoint knob or potentiometer was turned to the D setting and the lower of return or outside air brought into the building.

Control Curve	Control Point (Approximate Temperature at 50% Humidity)
A	73°F (23°C)
B	70°F (21°C)
C	67°F (19°C)
D	63°F (17°C)
Knob turned to D	For Differential Enthalpy (2 Sensor)

Example: With A, B, C, D potentiometer logic module set at “C”. Dry bulb temperature at 65°F (18.3°C) and Relative Humidity (RH) at 50% RH the logic module would free cool on first call for cooling for commercial thermostat.

H705 Wiring Diagram

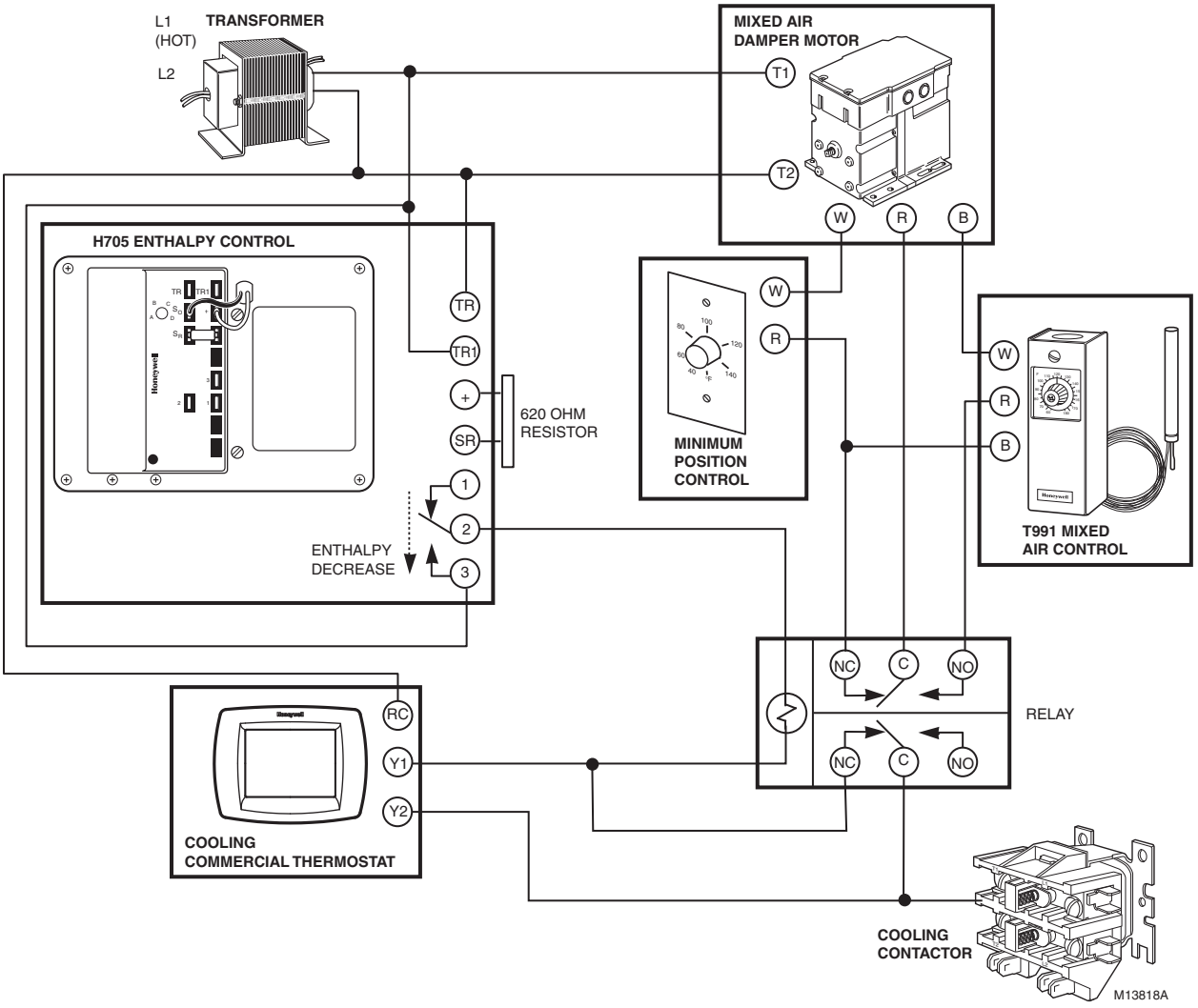

The H705 enthalpy control is being used in this application in place of a dry bulb temperature economizer high limit. The H705 included a single enthalpy sensor for the outside air. An optional second C7400 installed in the return air was used for differential enthalpy. If the second C7400 sensor is not used a 620 ohm resistor was installed across the S_R and + terminals. The economizer modulated the outdoor dampers for free cooling provided the outside air enthalpy was below the setpoint on the H705. If the outdoor enthalpy is above the setpoint the outside air dampers are closed to a minimum position for ventilation and the mechanical cooling is energized.

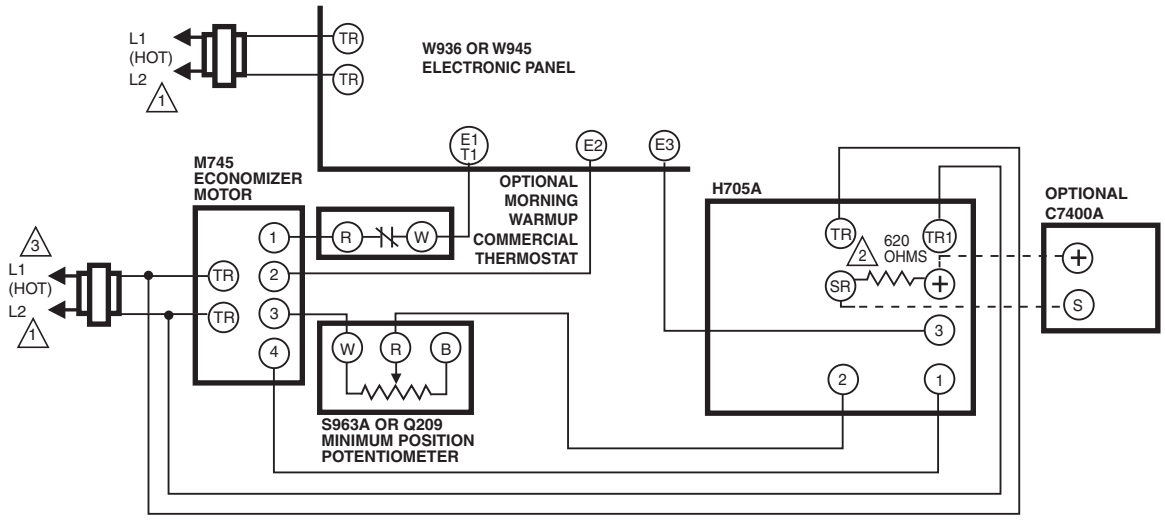

1 PROVIDE DISCONNECT MEANS AND OVERLOAD PROTECTION AS REQUIRED.

2 FACTORY INSTALLED 620 OHM, 1 WATT, 5% RESISTOR SHOULD BE REMOVED ONLY IF A C7400A SENSOR IS ADDED TO SR AND + FOR DIFFERENTIAL ENTHALPY.

3 ENSURE THAT EQUIPMENT TRANSFORMER IS SIZED TO HANDLE THE EXTRA LOAD OF THE ECONOMIZER AND ACTUATOR.

M15037C

H705A used in electronic system

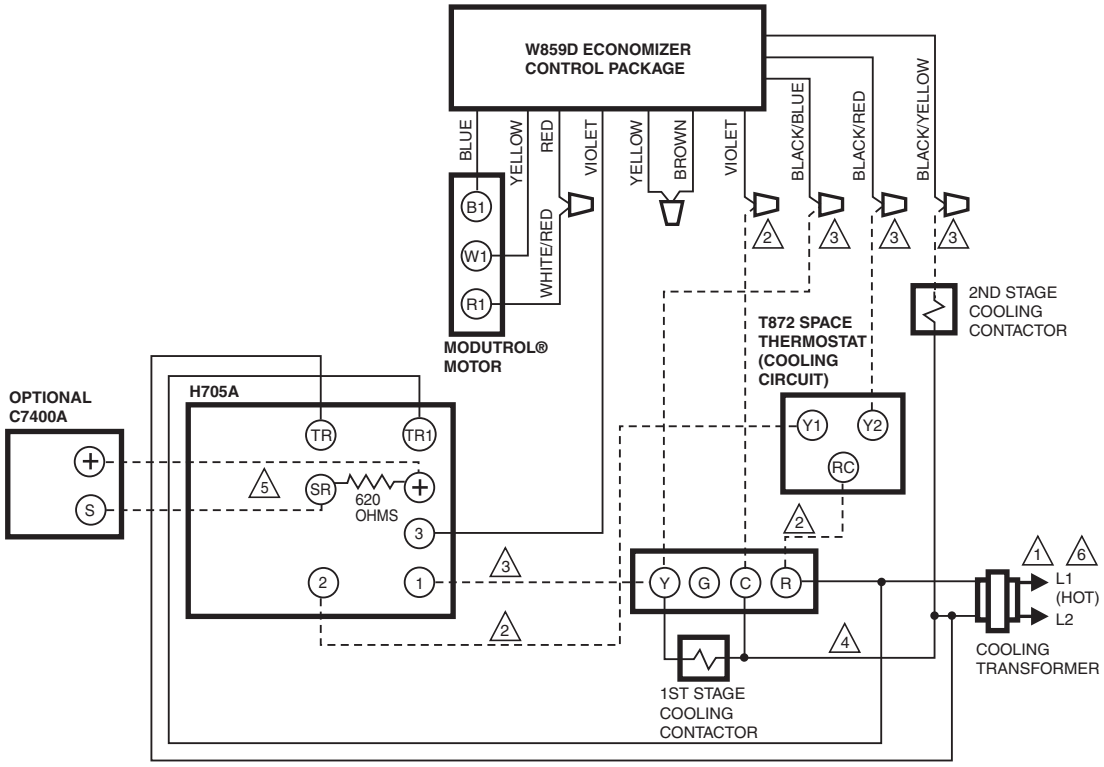

1 PROVIDE DISCONNECT MEANS AND OVERLOAD PROTECTION AS REQUIRED.

2 FIELD CONTROL WIRING REQUIRED TO INTEGRATE ECONOMIZER INTO UNIT.

3 FIELD WIRING REQUIRED TO PROVIDE ECONOMIZER AND MECHANICAL COOLING OPERATION IN EXISTING INSTALLATION.

4 ROOFTOP TERMINAL STRIP IS PART OF AIR CONDITIONING UNIT.

5 FACTORY-INSTALLED 620 OHM, 1 WATT, 5% RESISTOR SHOULD BE REMOVED ONLY IF A C7400A SENSOR IS ADDED TO SR AND + FOR DIFFERENTIAL ENTHALPY.

6 ENSURE THAT EQUIPMENT TRANSFORMER IS SIZED TO HANDLE THE EXTRA LOAD OF THE ECONOMIZER AND ACTUATOR.

M12162A

H705A used in electromechanical system

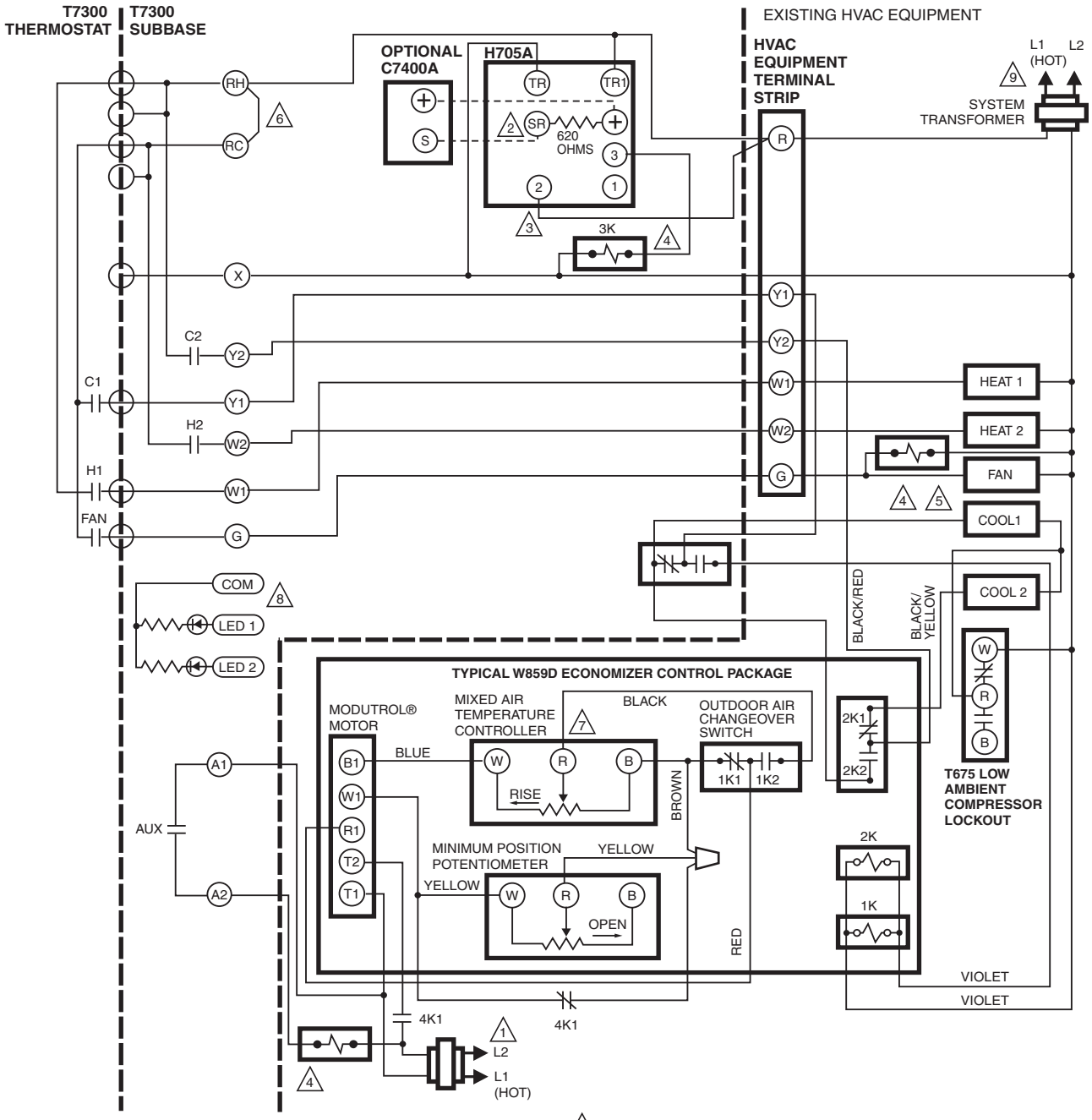

1. POWER SUPPLY. PROVIDE DISCONNECT MEANS AND OVERLOAD PROTECTION AS REQUIRED.
2. FACTORY-INSTALLED 620 OHM, 1 WATT, 5% RESISTOR SHOULD BE REMOVED ONLY IF A C7400A SENSOR IS ADDED TO SR AND + FOR DIFFERENTIAL ENTHALPY.
3. ENTHALPY CONTROL MAKES TERMINALS 2-1 ON ENTHALPY RISE, AND 2-3 ON ENTHALPY FALL.
4. RELAY REQUIRED (R8222 OR SIMILAR).
5. ECONIMIZER MOTOR SPRING RETURNS CLOSED ANY TIME FAN IS NOT RUNNING.
6. FIELD INSTALLED JUMPER.
7. IMPORTANT: MIXED AIR SENSOR MUST BE LOCATED DOWNSTREAM OF THE EVAPORATOR COIL IN THE DISCHARGE AIR DUCT TO PROVIDE ECONOMIZER LOW LIMIT FUNCTION.
8. 24 VAC ONLY.
9. MUST BE ABLE TO CARRY ADDITIONAL 6 VA LOAD OF COMMERCIAL THERMOSTAT AND SUBBASE.

M12167B

T7300/Q7300 using W859D Economizer Package with H705A in two-stage heating/two-stage cooling system, defeating economizer minimum position during unoccupied periods

Section 5 - M7XXX Black Motor

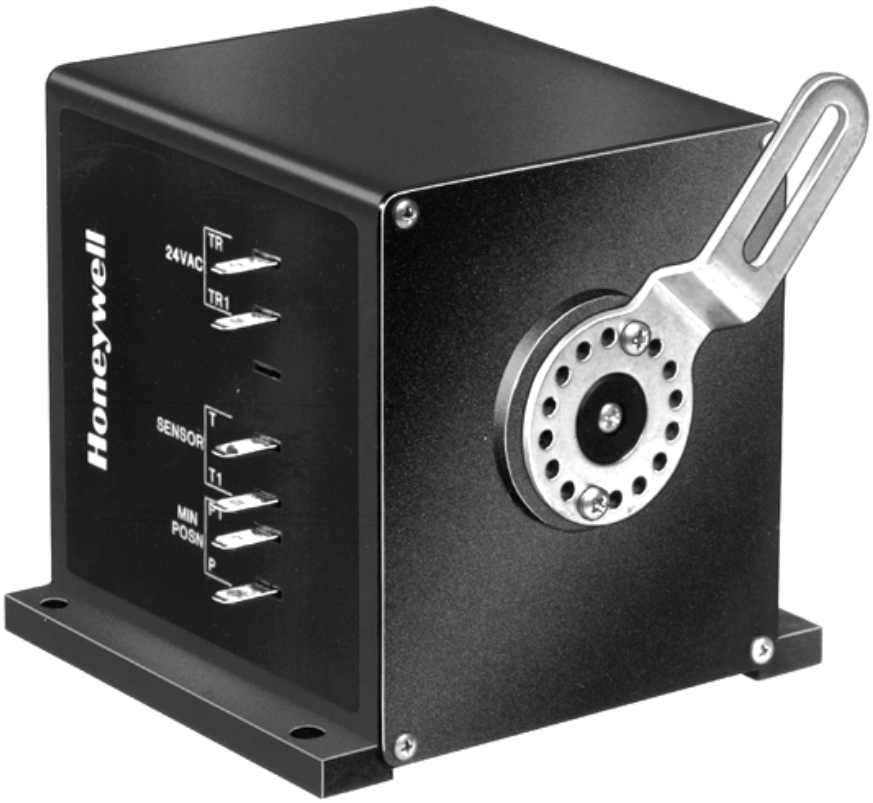

M7215, M7415, M7405 and M8405 Actuators

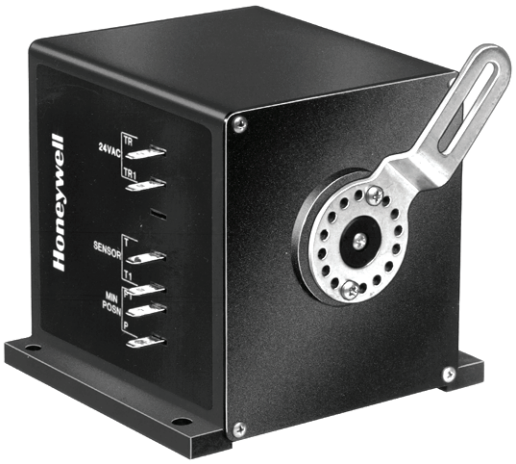

M7215 modulating motor, with 2-10 Vdc input required.

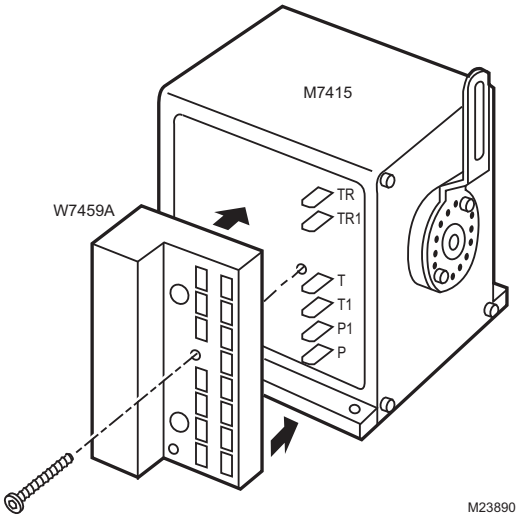

The M7XXX line of spring return actuators are:

- Low torque 25 lb-in. (2.8 N-m)
- 90 second timing in 90 degrees travel
- Rotation of 90 degrees
- Quick connect terminals for wiring connections

There are more actuators available in this series than listed on this page. Only actuators shown on this page are used with the W7459, W7210, W7212, W7215, W7220 and W7340 economizer modules. They are widely used to modulate the mixed air dampers on smaller rooftop air handlers since the operating temperature rating is -25 to 125°F (-32 to 52°C).

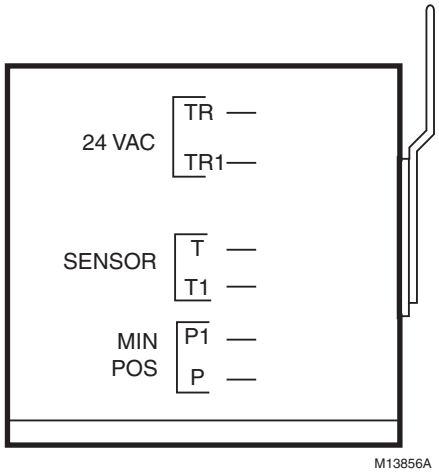

M7215 modulating motor. Used with W7212, W7213, W7214 or W7220 only

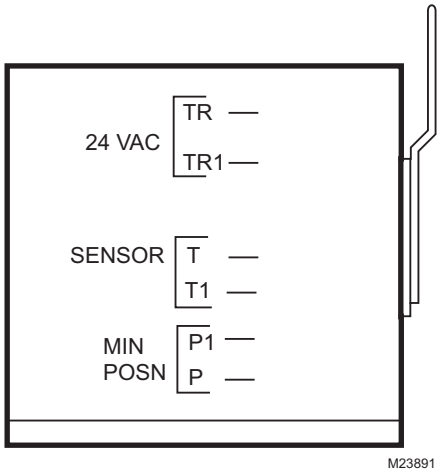

M7415 modulating motor, sensor input or controller required. Used with W7459A or D only.

NOTE: Using a black motor with a sensor for economizer changeover is no longer an acceptable method of economizer control in ASHRAE 90.1, IECC, ICC and CA Title 24. Systems with this type of changeover should be updated

to an economizer control strategy approved by the local or state authority having jurisdition.

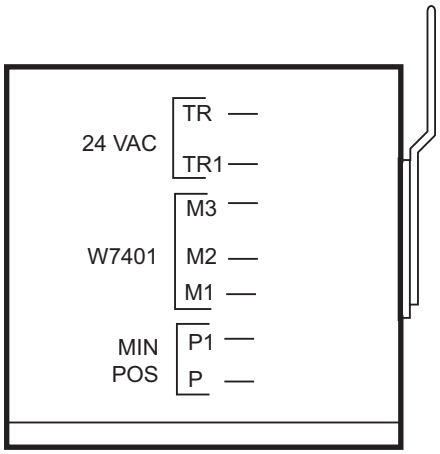

M7405 modulating motor. Used with W7459B and W7400/T7400 only.

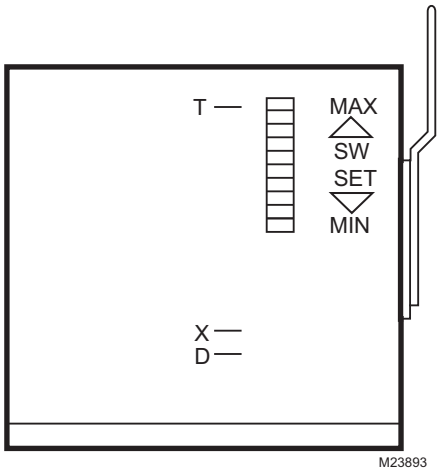

M8405 3-position actuator. Used with W7459C only.

Section 5 - M74XX Black Motor

Section 6 - W7459 Economizer Module

FOR USE WITH M7415 SERIES ACTUATORS

W7459 Enthalpy Module Components

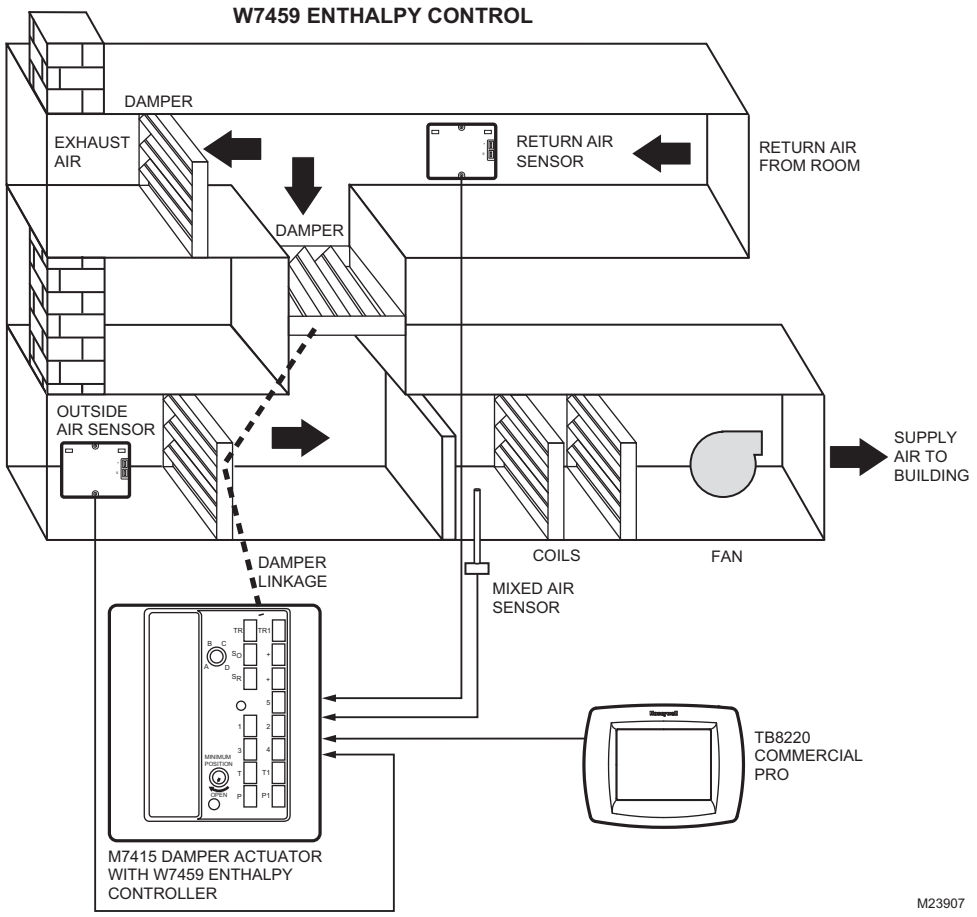

The W7459 is used in conjunction with a Honeywell actuator (M7415) and sensors to control outdoor and return air dampers free cooling using outside air. It is designed to be installed directly on the actuator.

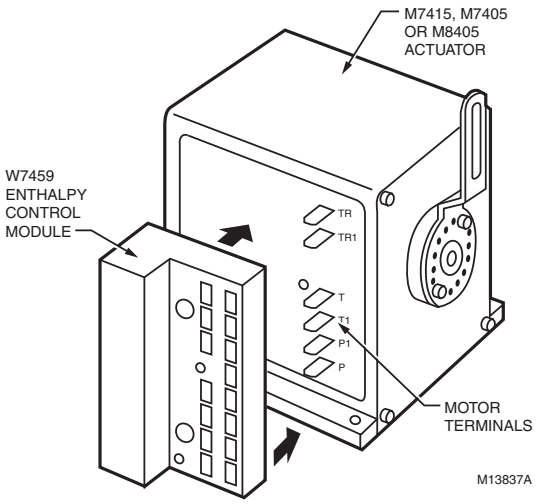

The W7459 was used with Honeywell C7400A enthalpy, C7650 or C7660 dry bulb temperature sensors and the M7415, M7405, and M8405 actuators. It had to be installed in free flowing air yet out of direct rain or sunlight. It can be used as a single or differential enthalpy control. A minimum position potentiometer is built into all W7459 modules except for the W7459C since the M8405 actuator, that it is used with, has the setting built-in. All W7459 modules can be used with remote minimum position potentiometers. See Table 1 for model capability with motors.

Table 1. Economizer Usage

Model	For use with Actuator	Discharge Air Temperature Input	Minimum Position Potentiometer	Terminals for Remote Minimum Damper Position	Output Relays
W7459A	M7415	C7510B or C7046A Sensor	Yes	Yes	2 SPDT
W7459B	M7405A	Direct digital control W7401/W7411 Logic Panel	Yes	Yes	1 SPDT
W7459C	M8405	SPST control	No. Minimum position adjustment is built into M8405 Actuator.	No	2 SPDT
W7459D[a]	M7415	C7150B or C7046A Sensor	Yes	Yes	2 SPDT

[a] W7459D has a high enthalpy limit and defaults to mechanical cooling when the outdoor enthalpy reaches the preset limit. Do not use a dry bulb sensor for a high temperature limit.

W7459A, B, C and D

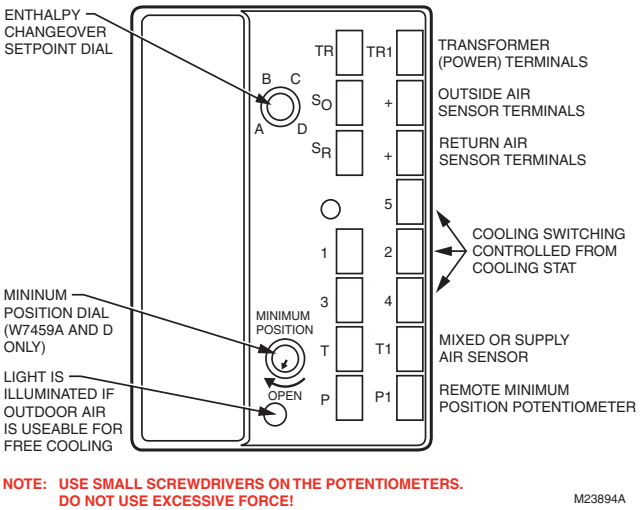

NOTE: USE SMALL SCREWDRIVERS ON THE POTENTIOMETERS. DO NOT USE EXCESSIVE FORCE!

M23894A

W7459A

W7459A or D - Uses inputs from mixed or discharge air temperature sensors, C7150 or C7046; enthalpy sensor C7400; and optional remote minimum position potentiometer Q709A or S963B. The W7459D is identical to the W7459A except for the addition of a built-in enthalpy high limit. Refer to high limit function in Table 2 and at the end of this section. Use both modules with M7415 motors.

There are four separate W7459 enthalpy logic modules for use with various M74XX series actuators. All provide enthalpy control of mixed air. The W7459B is designed for use with a legacy Honeywell direct digital controller. The W7459C uses a SPST input for the mixed air sensor.

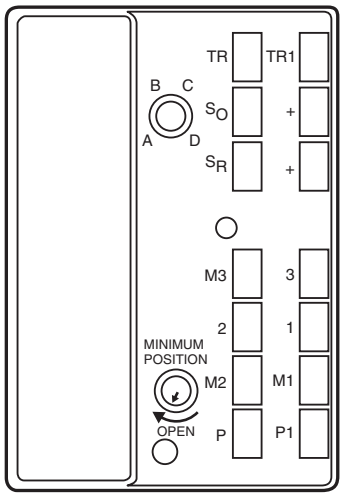

NOTE: USE SMALL SCREWDRIVERS ON THE POTENTIOMETERS. DO NOT USE EXCESSIVE FORCE!

M23895A

W7459B

W7459B - Used with Honeywell W7401 Logic Panel, enthalpy sensor C7400 or minimum position potentiometer Q709A or S963B. Use with M7405.

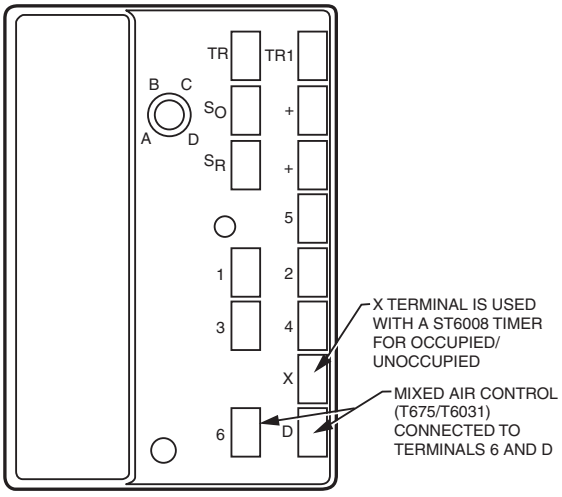

NOTE: USE SMALL SCREWDRIVERS ON THE POTENTIOMETERS. DO NOT USE EXCESSIVE FORCE!

M23896A

W7459C

W7459C - Uses input from SPST mixed or discharge air control and enthalpy sensor C7400. Used with M8405.

W7459 Enthalpy Setpoint Chart

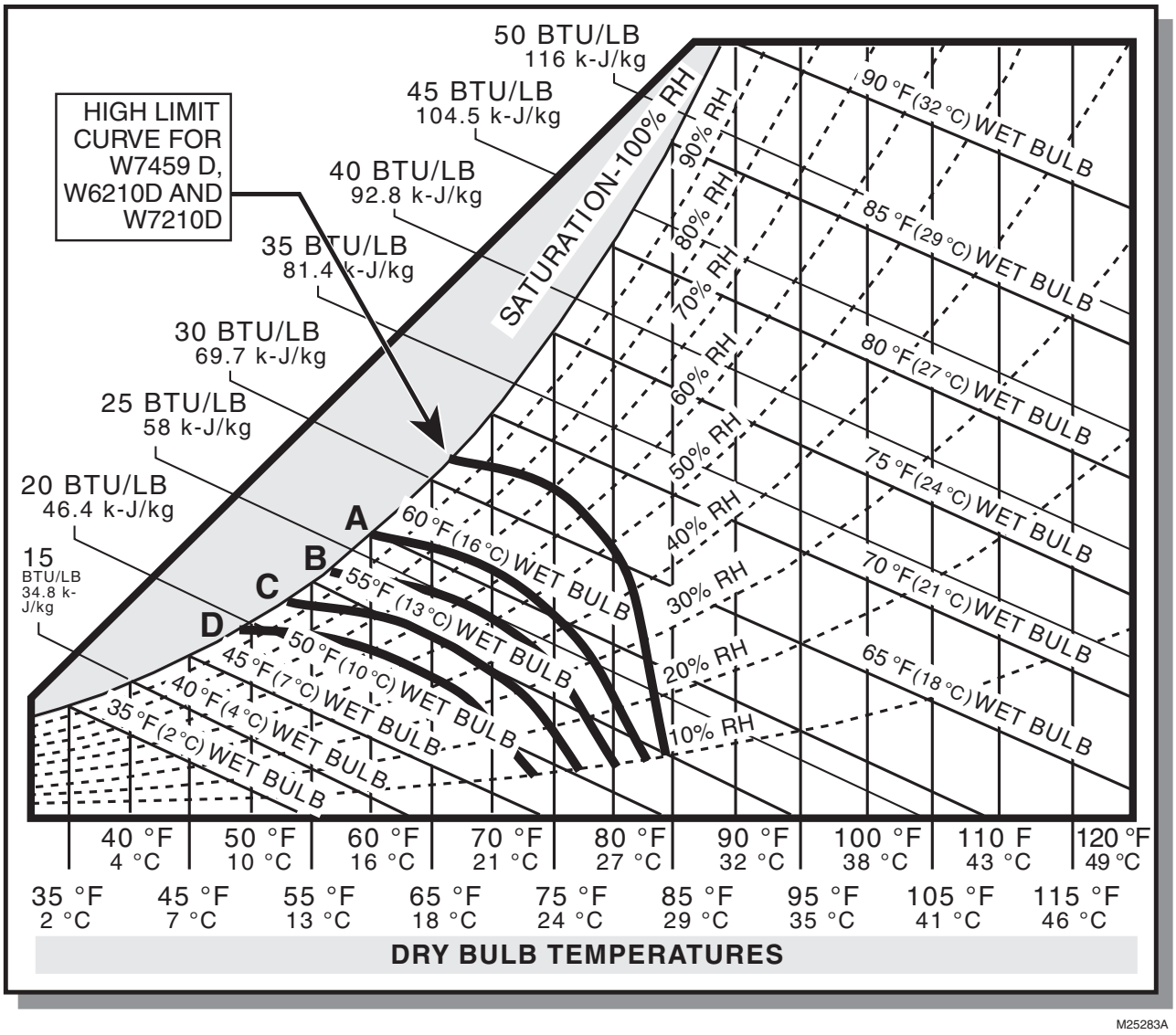

M25283A

This is the psychrometric chart for the setpoint on the W7459 enthalpy modules. It is similar to the charts for the H705 except for the enthalpy high limit line to the right of the A curve. This is a specialized limit used only in the W7459D, W6210D, W7210D and W7212 controllers. When the enthalpy of both the return and outside air is to the right of the limit line the outside air dampers are closed to the minimum position and the mechanical cooling is energized.

Control Curve	Control Point (Approximate Temperature at 50% Humidity)
A	73°F (23°C)
B	70°F (21°C)
C	67°F (19°C)
D	63°F (17°C)
Knob turned to D	For Differential Enthalpy (2 Sensor)

When using differential enthalpy the outdoor air is compared to the return air and you set the potentiometer to "D" to prevent the return air from being to the left of the enthalpy curve.

If the return air were to the left of the enthalpy curve, you would use the enthalpy curve instead of the return air conditions. For example, if the return air conditions were between D and C and the outdoor was to the right of the A AND the potentiometer was set to B, you would use the B curve instead of the return air. If the outdoor air conditions were to the left of the return air you would use the outdoor air. If the outdoor conditions are to the right of the return air conditions you use the return air.

High Limit Switching

Table 2. W7459D, W7210D and W7212 High Limit Switching.

Percent RH	Switch Over Point on Enthalpy Decreasing	Switch Over Point on Enthalpy Increasing
25	83°F ±0.5°F (28°C ±0.3°C)	85°F ±0.5°F (29°C ±0.3°C)
50	78°F ±0.5°F (26°C ±0.3°C)	80°F ±0.5°F (27°C ±0.3°C)
60	76°F ±0.5°F (24°C ±0.3°C)	78°F ±0.5°F (26°C ±0.3°C)
75	73°F ±0.5°F (23°C ±0.3°C)	75°F ±0.5°F (24°C ±0.3°C)

The W7459D, W6210D, W7210D, and W7212 include the high limit function that is not used on any other economizer modules. It is a high enthalpy limit that applies to both return and outside air. It only applies when using differential changeover, not single enthalpy. When the return and outside enthalpy both exceed the high limit curve, (refer to the psychrometric chart on the previous page) the outside air dampers are closed to the minimum position and the mechanical cooling is energized. In a standard differential enthalpy control sequence the lower of the outside and return is selected regardless of the amount of enthalpy in either.

A typical application of this limit function is a building located in a warm, humid climate with a high internal heat gain such as a laundry or kitchen. A standard differential enthalpy control circuit may have extremely warm, humid outside air being cooled just because the indoor air is temporarily higher in enthalpy. The mechanical cooling equipment might be undersized and the indoor enthalpy then remains higher than outside longer than the desired period of time. The high limit function (only available on some economizer modules) prevents this from occurring by automatically switching to return air and turning on the mechanical cooling during very high outdoor air enthalpy conditions.

W7459A Wiring Diagram

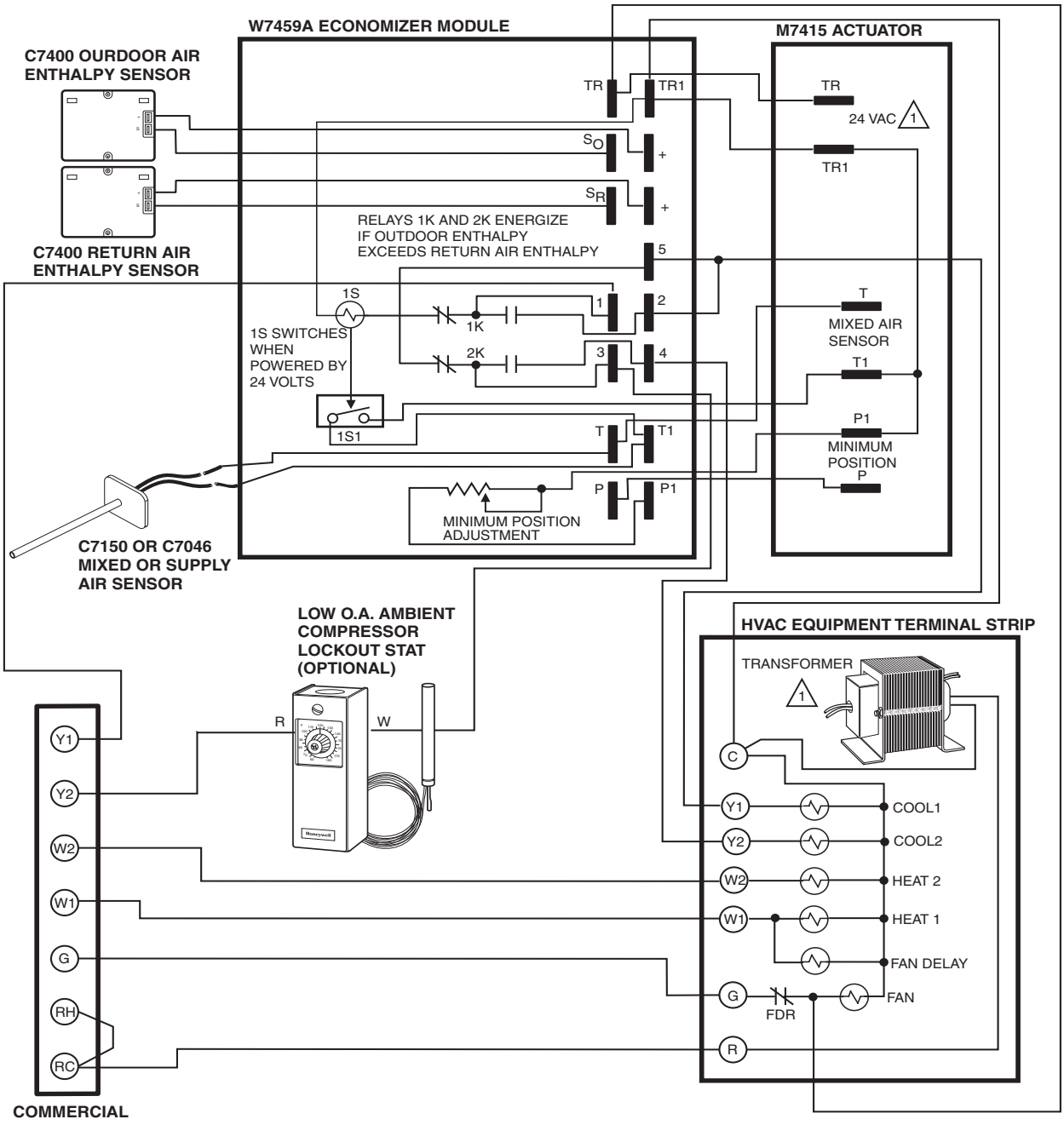

1 HONEYWELL RECOMMENDS USE OF A SINGLE LARGE TRANSFORMER FOR BOTH THE ECONOMIZER LOGIC MODULE AND THE COOLING COMMERCIAL THERMOSTAT CIRCUIT.

2 WHEN THE SUPPLY FAN IS POWERED, THE ECONOMIZER IS POWERED AND THE DAMPER IS POSITIONED TO MINIMUM POSITION. TAKE CAUTION WHEN USING THIS CONTROL SEQUENCE ON NEWER ECONOMIZERS WITH MICROPROCESSOR CONTROL. DO NOT POWER THE MICROPROCESSOR ECONOMIZERS FROM THE SUPPLY FAN, THEY NEED CONSTANT POWER.

M13819A

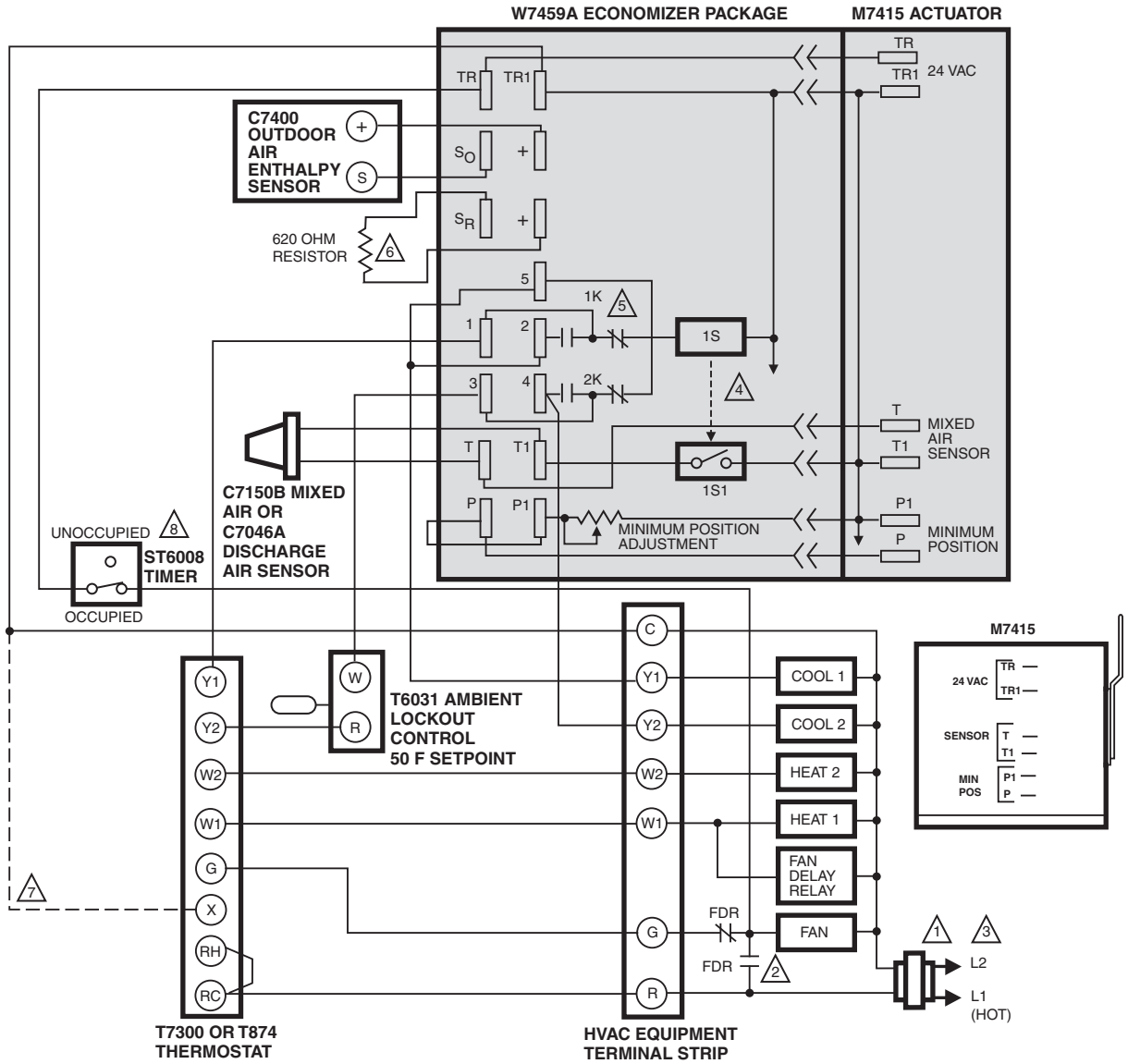

1. POWER SUPPLY. PROVIDE DISCONNECT MEANS AND OVERLOAD PROTECTION AS REQUIRED.
2. MOTOR SPRING-RETURNS CLOSED WHEN FAN IS NOT RUNNING.
3. ENSURE THAT EQUIPMENT TRANSFORMER IS SIZED TO HANDLE THE EXTRA LOAD OF THE ECONOMIZER AND ACTUATOR.
4. 1S IS AN ELECTRONIC SWITCH THAT CLOSES WHEN POWERED BY A 24 VAC INPUT.
5. RELAYS 1K AND 2K ACTUATE WHEN THE ENTHALPY SENSED BY THE C7400 IS HIGHER THAN THE ENTHALPY SETPOINT A-D.
6. FACTORY INSTALLED 620 OHM, 1 WATT, 5% RESISTOR SHOULD BE REMOVED ONLY IF A C7400 ENTHALPY SENSOR IS ADDED TO S_R AND + FOR DIFFERENTIAL ENTHALPY.
7. FOR T7300 ONLY.
8. WITH T7300, USE CONTACTS A_1 AND A_2 INSTEAD OF S7005 TIMER.

M10115C

W7459A/C7400 used in two-stage cooling system with single enthalpy changeover and with M7415 Actuator

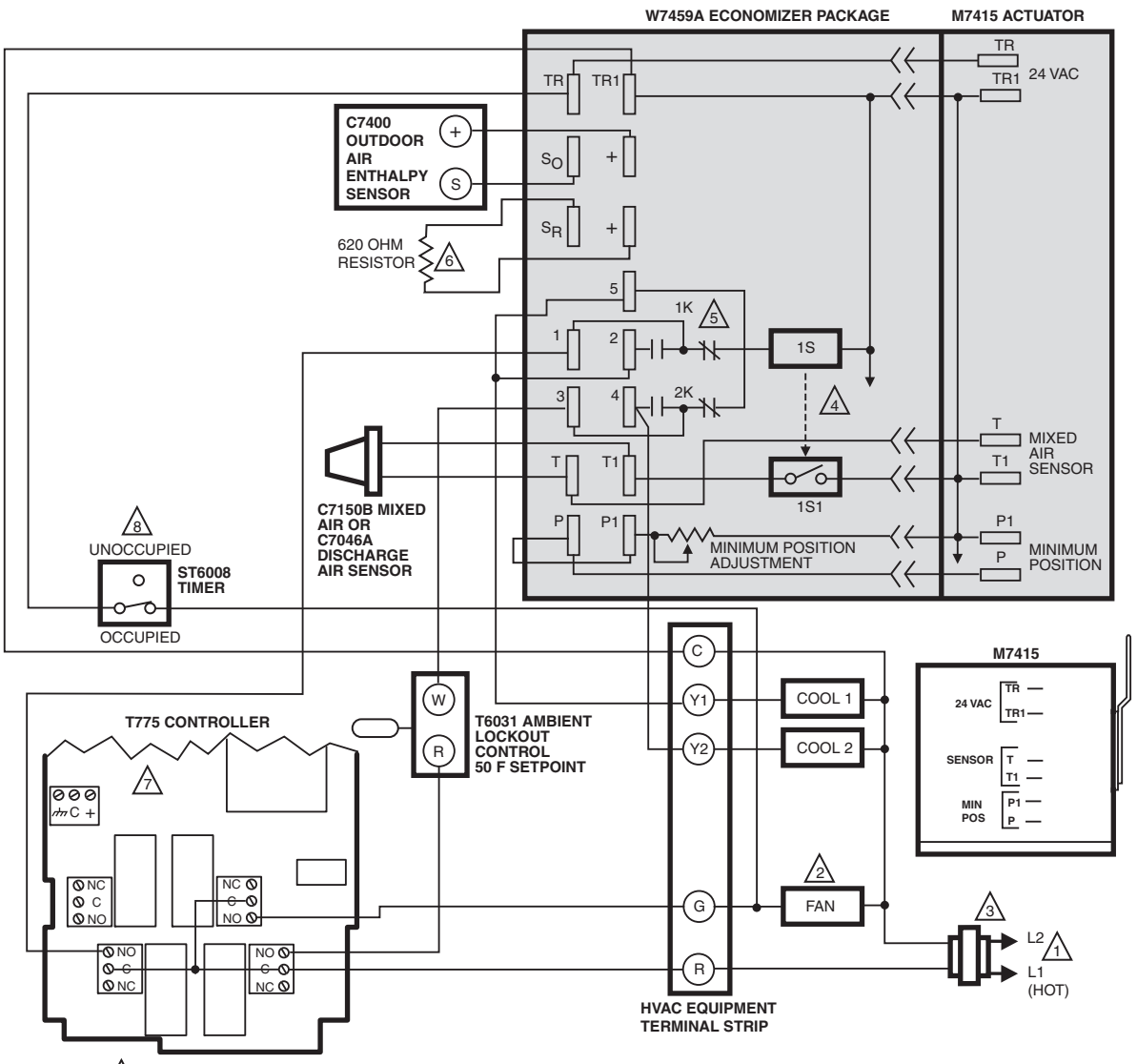

1. POWER SUPPLY. PROVIDE DISCONNECT MEANS AND OVERLOAD PROTECTION AS REQUIRED.
2. MOTOR SPRING-RETURNS CLOSED WHEN FAN IS NOT RUNNING.
3. ENSURE THAT EQUIPMENT TRANSFORMER IS SIZED TO HANDLE THE EXTRA LOAD OF THE ECONOMIZER AND ACTUATOR.
4. 1S IS AN ELECTRONIC SWITCH, WHICH CLOSES WHEN POWERED BY A 24 VAC INPUT.
5. RELAYS 1K AND 2K ACTUATE WHEN THE ENTHALPY SENSED BY THE C7400 IS HIGHER THAN THE ENTHALPY SETPOINT A-D.
6. FACTORY INSTALLED 620 OHM, 1 WATT, 5% RESISTOR SHOULD BE REMOVED ONLY IF A C7400 ENTHALPY SENSOR IS ADDED TO S_R AND + FOR DIFFERENTIAL ENTHALPY.
7. T775 REQUIRES A MINIMUM OF THREE RELAY OUTPUTS: TWO FOR COOLING AND ONE FOR FAN CONTROL.
8. T775 SERIES 2000 CAN BE PROGRAMMED TO PROVIDE TIME OF DAY CLOCK AND THE ST6008 TIMER CAN BE ELIMINATED.

M13843B

W7459A/C7400 or W7459D/C7400 used in two-stage cooling system with single enthalpy changeover, M7415 Actuator, and T775 Series 2000 Controller

Section 6 - W7459 Economizer Module

Section 7 - W6210 And W7210 Economizer Modules

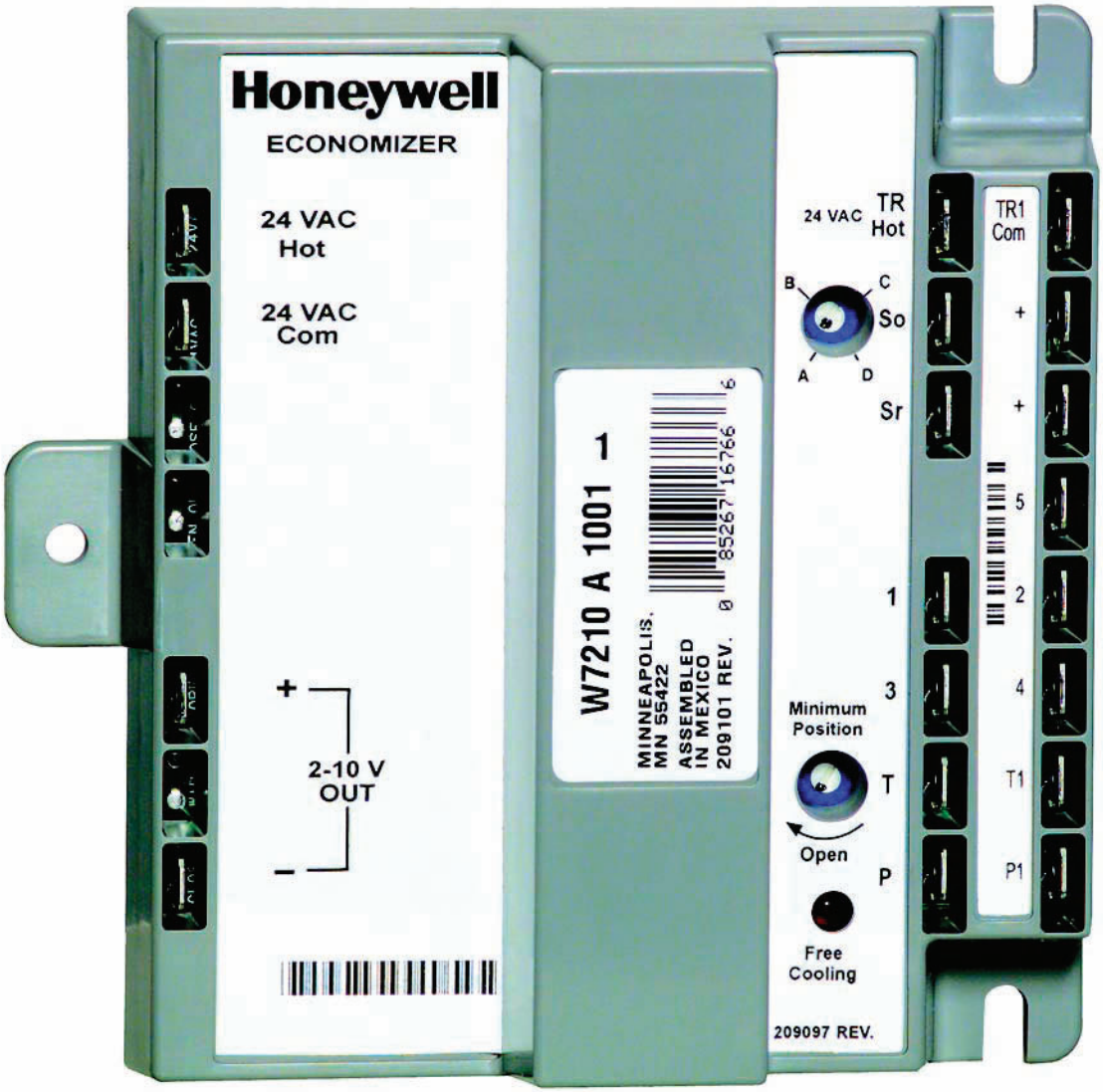

W7210 Economizer System Components

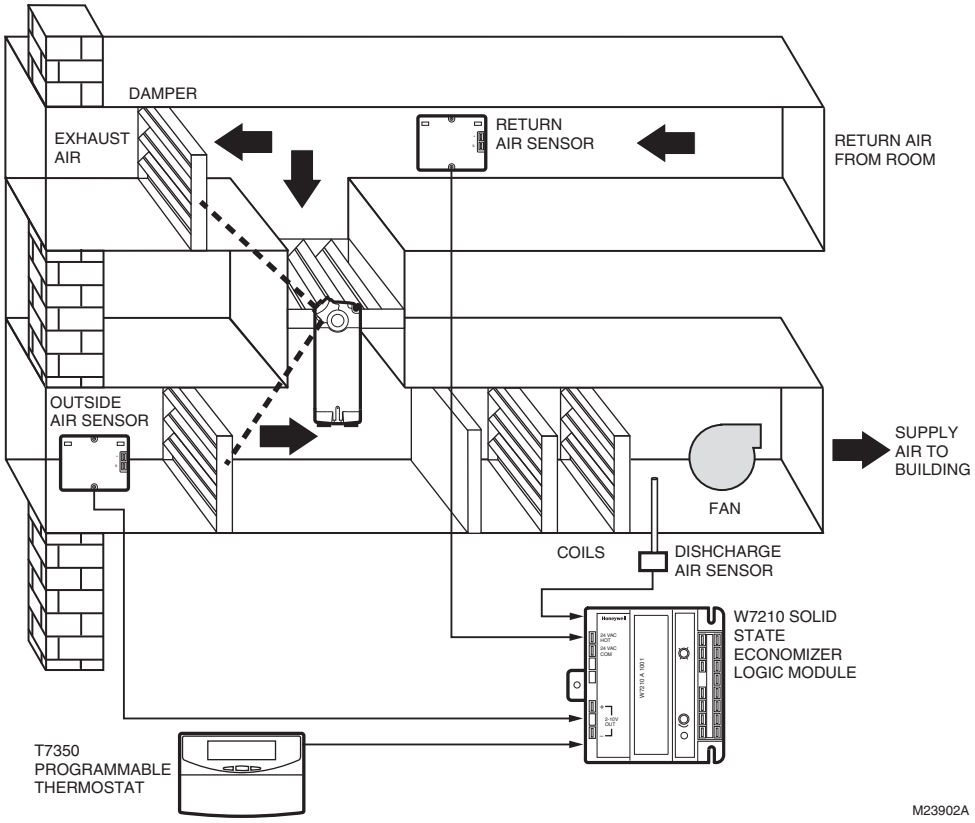

W6210 and W7210 Components

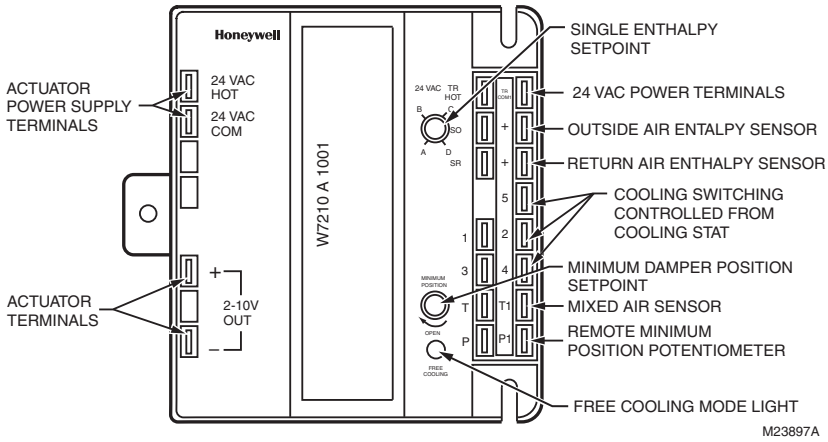

The W7210 logic modules had the identical functions as the W7459 modules with the addition of a 2-10 Vdc output for use with M7215 foot-mounted actuators or DCA's and Modutrol Motors with 2-10 Vdc control. The mixed air control circuit was in the logic module and no longer in the actuator. The actuator could also be powered with the same 24 Vac power as the logic modules provided the internal grounding of the actuator was compatible. Note some of the non-Honeywell actuators were not compatible with the M7210.

High Limit Function

There were high limit versions of these economizer logic modules, W7210D. When in the differential enthalpy mode and both the return and outside air enthalpy were above a preset level, the outside air dampers were returned to minimum position and the mechanical cooling was energized. The curve for this limit function is illustrated on the psychrometric chart as the line to the right of the A curve. Refer to high limit section of this guide for more information.

Wiring Connections

There are many possible wiring diagrams and combinations of controllers and actuators that can be used with the logic modules. Once you understand the input and output of the modules, you can usually determine how a system should be wired.

NOTE: Many user systems are wired to bypass operations and to "trick" the module into operating in a mode that it was not designed to do, these are the applications which may confuse you. When is doubt, call the unit supplier or refer to the product instructions for wiring diagrams.

W7210 Actuator Connections

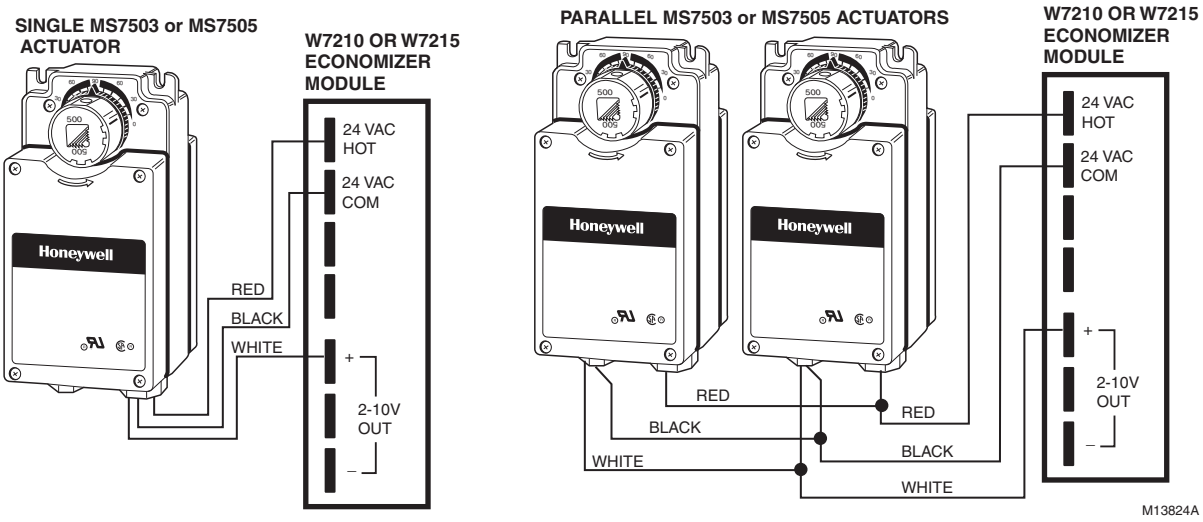

W7210 Wiring Diagrams

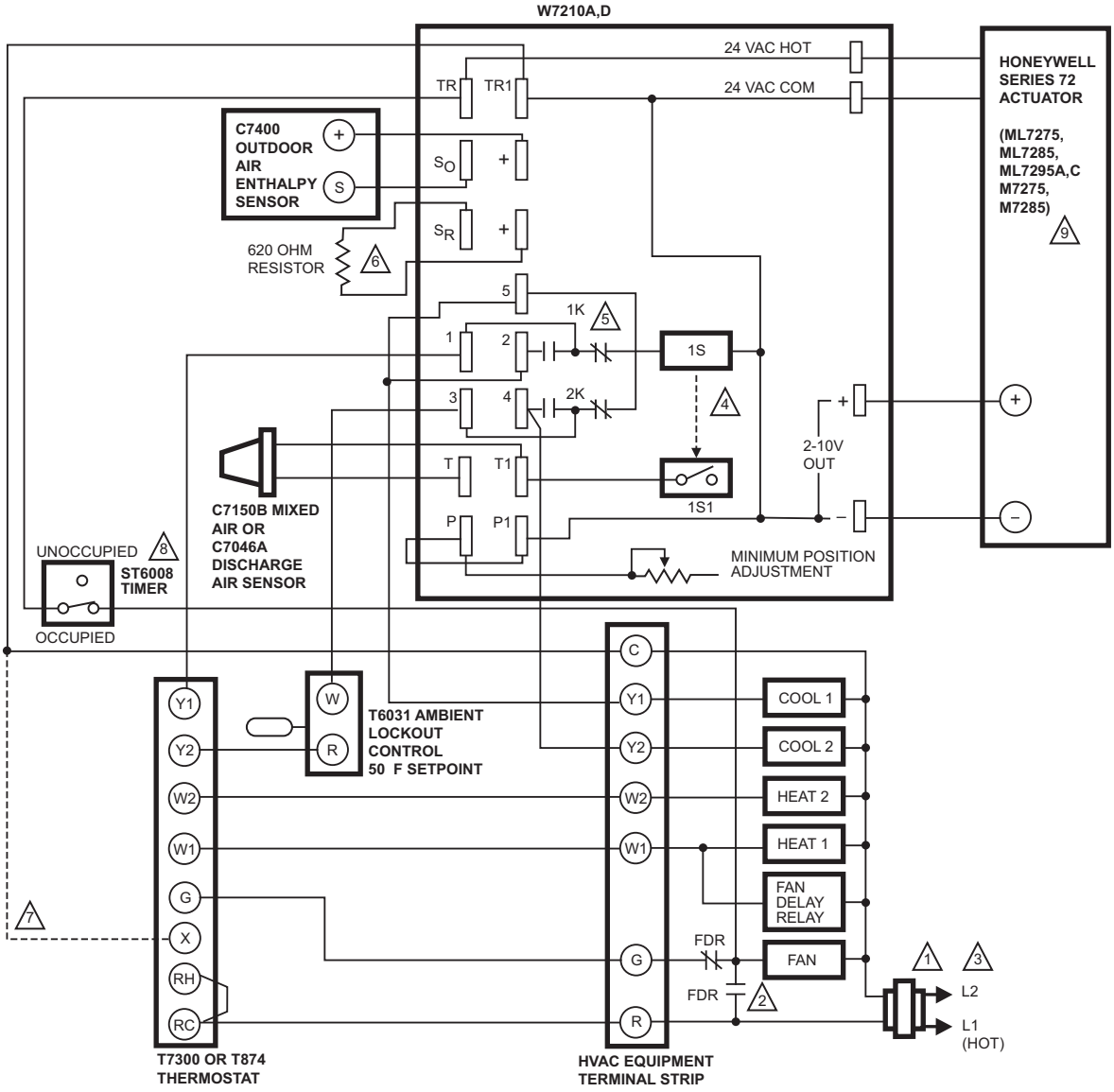

1. POWER SUPPLY. PROVIDE DISCONNECT MEANS AND OVERLOAD PROTECTION AS REQUIRED.
2. ACTUATOR SPRING-RETURNS CLOSED WHEN FAN IS NOT RUNNING.
3. ENSURE THAT EQUIPMENT TRANSFORMER IS SIZED TO HANDLE THE EXTRA LOAD OF THE ECONOMIZER AND ACTUATOR.
4. 1S IS AN ELECTRONIC SWITCH THAT CLOSES WHEN POWERED BY A 24 VAC INPUT.
5. RELAYS 1K AND 2K ACTUATE WHEN THE ENTHALPY SENSED BY THE C7400 IS HIGHER THAN THE ENTHALPY SETPOINT A-D.
6. FACTORY INSTALLED 620 OHM, 1 WATT, 5% RESISTOR SHOULD BE REMOVED ONLY WHEN A C7400 ENTHALPY SENSOR IS ADDED TO S_R AND + FOR DIFFERENTIAL ENTHALPY.
7. FOR T7300 ONLY.
8. FOR T7300, USE CONTACTS A1 AND A2 INSTEAD OF THE TIMER.
9. FOR THE ML7295A,C USE THE 4-20 MA MODEL ACTUATOR. THESE MODELS HAVE 500 OHM INPUT IMPEDENCE, WHICH ALLOWS THE ACTUATOR TO ACCEPT A 2-10 VDC SIGNAL.

M11154B

W7210A,D used in two-stage cooling system with single enthalpy changeover and Honeywell Series 72 Actuator

Section 7 - W6210 And W7210 Economizer Modules

Section 8- W6215, W7215 And W7460 Economizer Modules

W7215 System Components

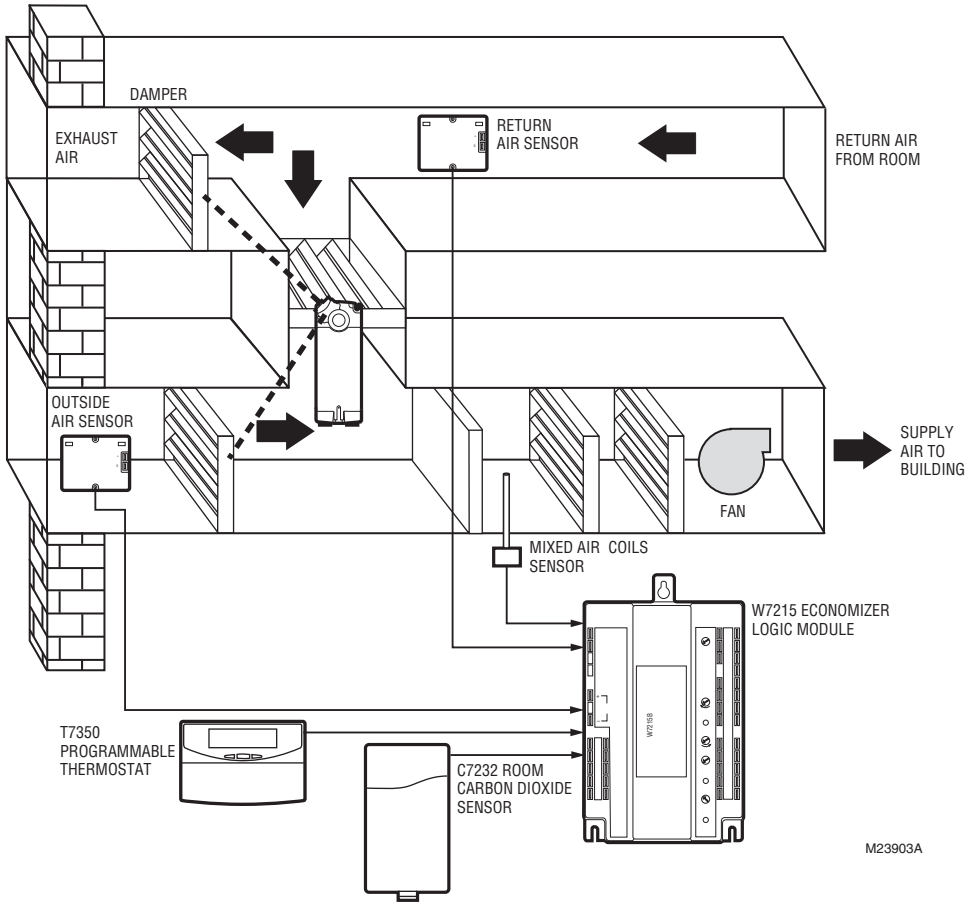

W6215, W7215 and W7460 Components

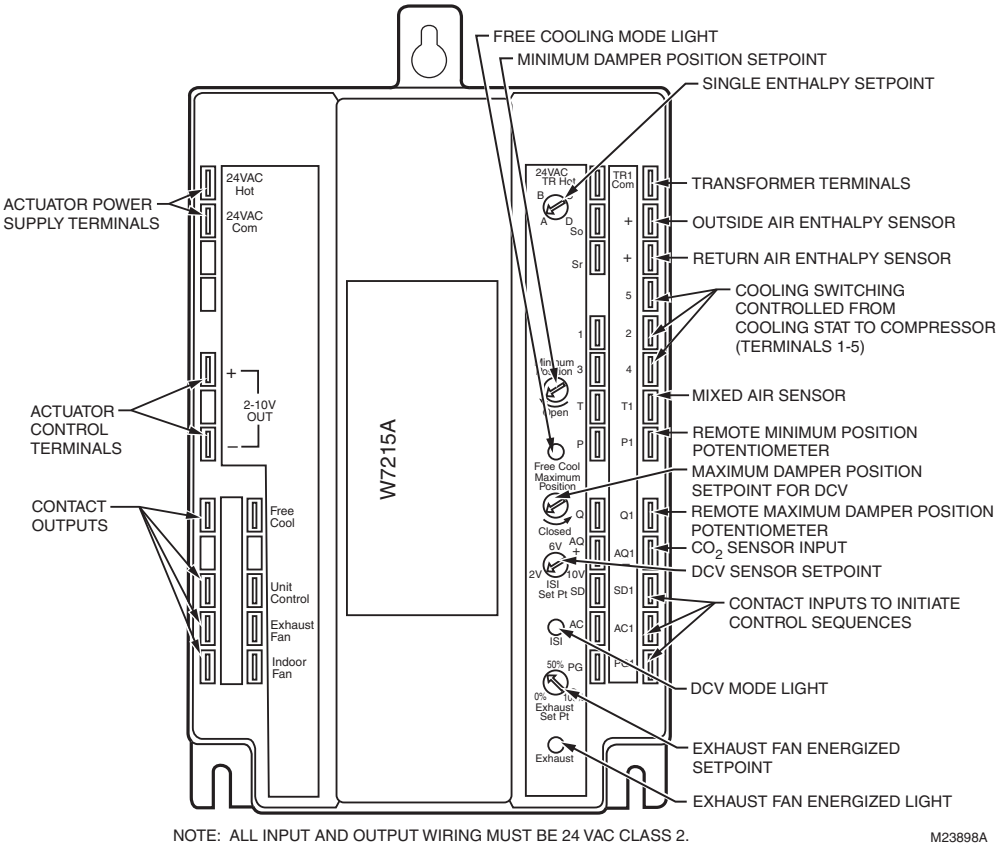

NOTE: ALL INPUT AND OUTPUT WIRING MUST BE 24 VAC CLASS 2. M23898A

The W7215A is an economizer module for use with series 72 actuators. The W7215B is similar except for an outside air content sensor input and slightly different contact inputs and outputs. The W6215A was for use with series 62 actuators but otherwise identical to the W7215A. The W7460A was for use with the M7415 actuator.

W7215B and W7460B Components

The W7215B and W7460B are equipped with outdoor air content sensor inputs. There are slight variations to the input and output terminals:

- The purge function is eliminated.
- An alarm contact output is added for when the indoor DCV and outdoor air content setpoints are simultaneously exceeded.
- The exhaust fan setpoint and exhaust indication light are eliminated.
- An outdoor air content sensor setpoint and indication light are added.

W6215, W7215, W7460 Inputs and Outputs

This series of economizer modules includes input and output contacts for use in controlling the fans and conditioning equipment on the air handler. Some of these contacts are not available on all modules.

Input and Output Applications

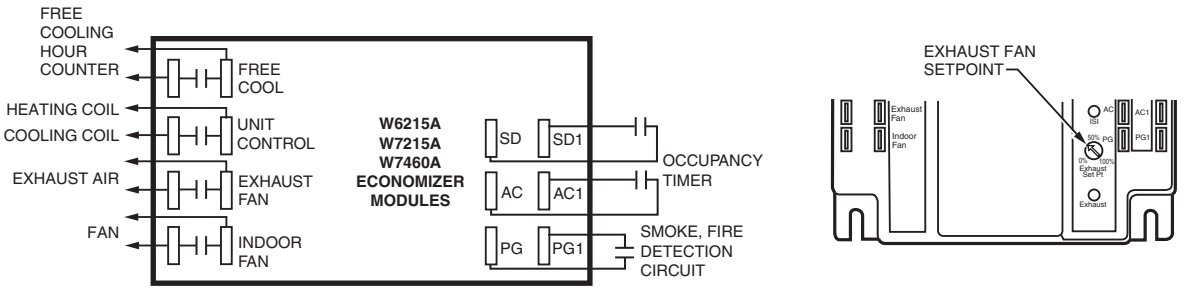

M13841A

NOT TO BE USED AS A LIFE SAFETY DEVICE

Options Available on A Models

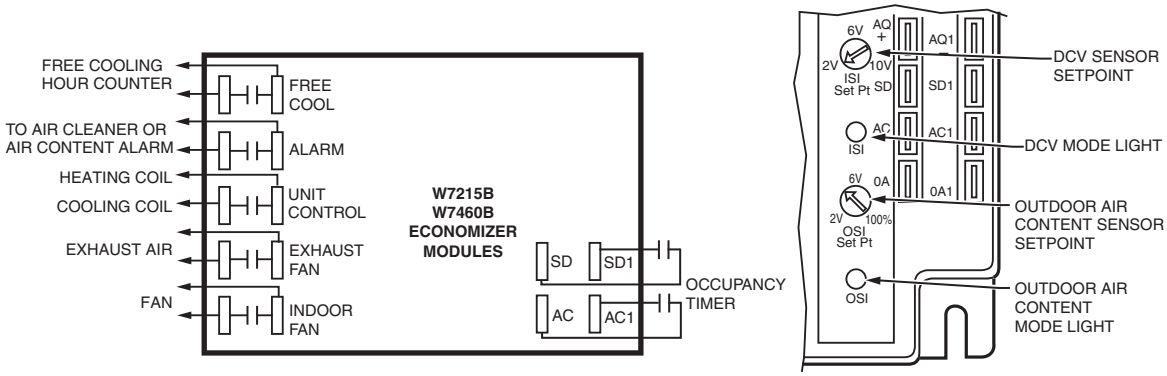

M13842A

NOT TO BE USED AS A LIFE SAFETY DEVICE

Options Available on B Models

Minimum and Maximum Settings

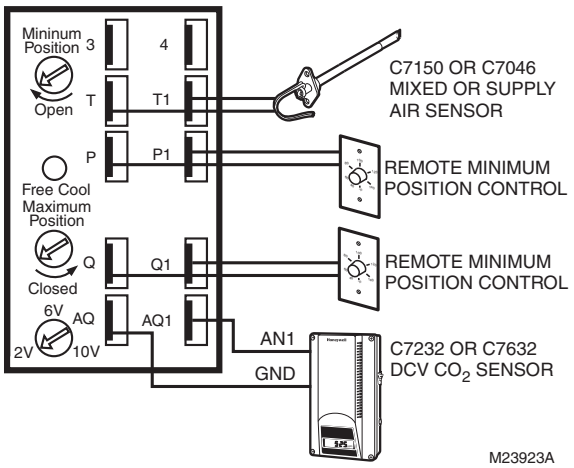

This series of economizer modules includes both minimum and maximum damper position settings. Previous economizer controls are equipped with only a minimum setting to maintain a volume of outside air for ventilation. The minimum setting on these modules is to ventilate for the building components when using DCV or to ventilate for cfm per person for maximum occupancy when not using DCV. The maximum setting is used to limit the amount of outside air brought into the air handler.

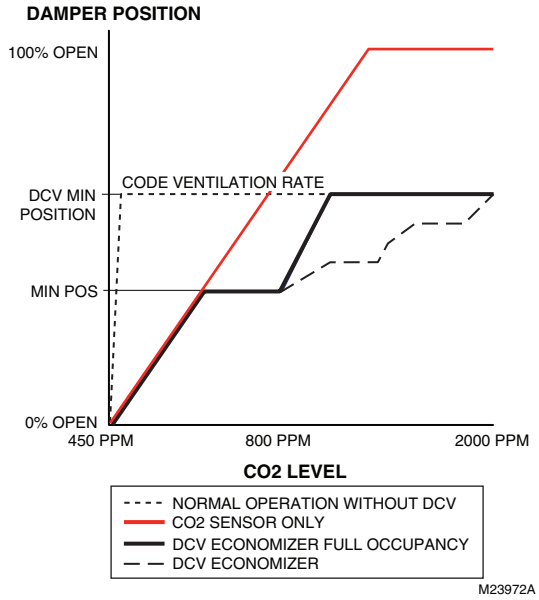

When using DCV, this is the sum of the ventilation for the building components and maximum human occupancy. See above diagram for control of dampers using DCV and minimum and maximum damper positions. When DCV is not used this setting can be used to limit the amount of outside air brought into the system.

If the dampers are being modulated as the first stage of cooling from the commercial thermostat, the DCV maximum setting is not in the circuit and the dampers can be opened fully as needed. If the dampers are being modulated from both the thermostat and the DCV sensor, the dampers will be opened to whichever is a higher signal. If the mixed air temperature decreases below 40°F (4°C) the signal from the DCV sensor is ignored and the dampers are modulated toward closed to prevent freezing of coils and other equipment in the air handling unit.

Indoor Air Content Sensor Settings

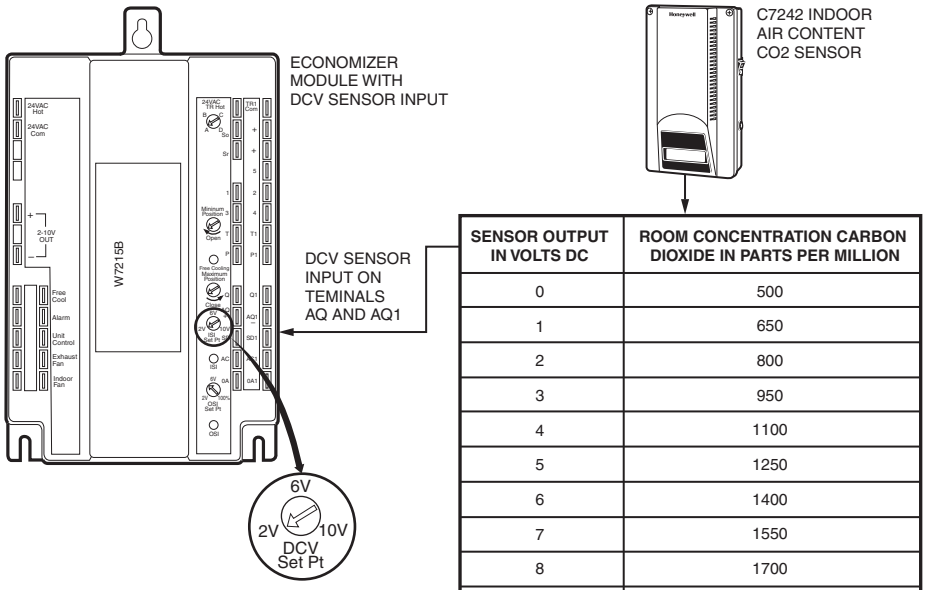

SENSOR OUTPUT IN VOLTS DC	ROOM CONCENTRATION CARBON DIOXIDE IN PARTS PER MILLION
0	500
1	650
2	800
3	950
4	1100
5	1250
6	1400
7	1550
8	1700
9	1850
10	2000

M23925A

The DCV input can be any sensor with a 2 to 10 Vdc output such as the Honeywell C7242, C7232 or C7632 carbon dioxide (CO_2)sensor. The sensor is supplied with preset configurations that can be used if they meet the application requirements. The output chart illustrated on the right side of this page is the Analog 1 configuration of startpoint and throttling range for a linear output.

Carbon Dioxide Sensor Setup

CO2 Sensors	Display	No Display	A1 Output	A2 Output
Wall Mount With Relay	C7242A1030	C7242A1048	0 Vdc = 500 ppm (2 Vdc = 800 ppm) and 10 Vdc = 2,00 ppm	Relay Output: 0 to 800 ppm = Open, More than 800 ppm = Closed, Reopens at less than 700 ppm
Wall Mount	C7242A1014	C7242A1022		Analog Sensor Mode: 0 Vdc = 500 ppm (2 Vdc = 800 ppm) and 10 Vdc = 2,000 ppm Time interval = 2 seconds
Duct Mount	C7242B1012	C7242B1020		
Outside Air	Not Available	C7232E1007		

For applications where factory configurations do not meet the application requirements the sensor may be re-configured by the installer to meet most configuration needs.

Most installers prefer to use a C7632 CO_2 sensor that does not need to be programed or adjusted when installed.

Outdoor Air Content Sensor

Outdoor Air Content Sensor	DCV	Mixed Air Damper Actuator	Outdoor Air Content Sensor Light	Alarm Contacts
Below Setpoint	Below Setpoint	Modulation based on signal from mixed air temperature sensor.	Off	Open
	Above Setpoint	Modulation between minimum and maximum positions based on signal from either mixed air or indoor air content sensors, whichever signal is higher.	Off	Open
Above Setpoint	Below Setpoint	Closed fully.	On	Open
	Above Setpoint	Modulation based on signal from mixed air temperature sensor. Terminals labeled Alarm made to energize warning light, audio alarm or air cleaner.	On	Closed

The purpose of the DCV sensor is different from that of the outdoor air content sensor. On the economizer modules equipped with outdoor air content sensors the purpose of the sensor is to keep the outside air dampers at a minimum position if the outdoor air is above its setpoint threshold. Alarm contacts on the economizer module will close if both the outdoor and indoor air (DCV) signals are above their respective setpoint thresholds.

W6215, W7215 and W7460 Actuator Usage

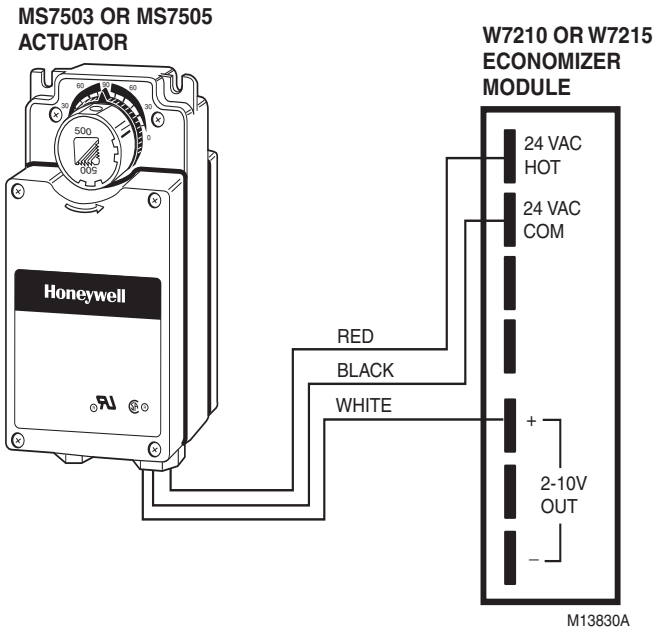

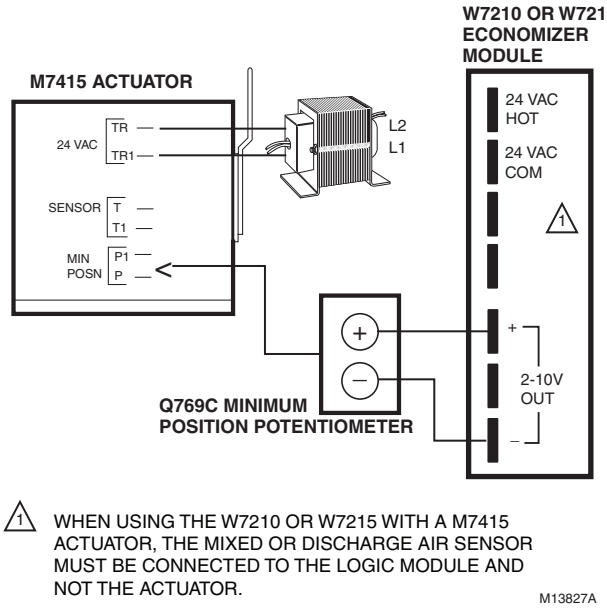

The W7460 can only be used with the M7415 actuator. The W7215 can be used with series 72 actuators (Direct Coupled Actuators, M7215 and Modutrol motors). The W6215 is only usable with series 62 actuators.

W6215, W7215 and W7460 Wiring Diagram

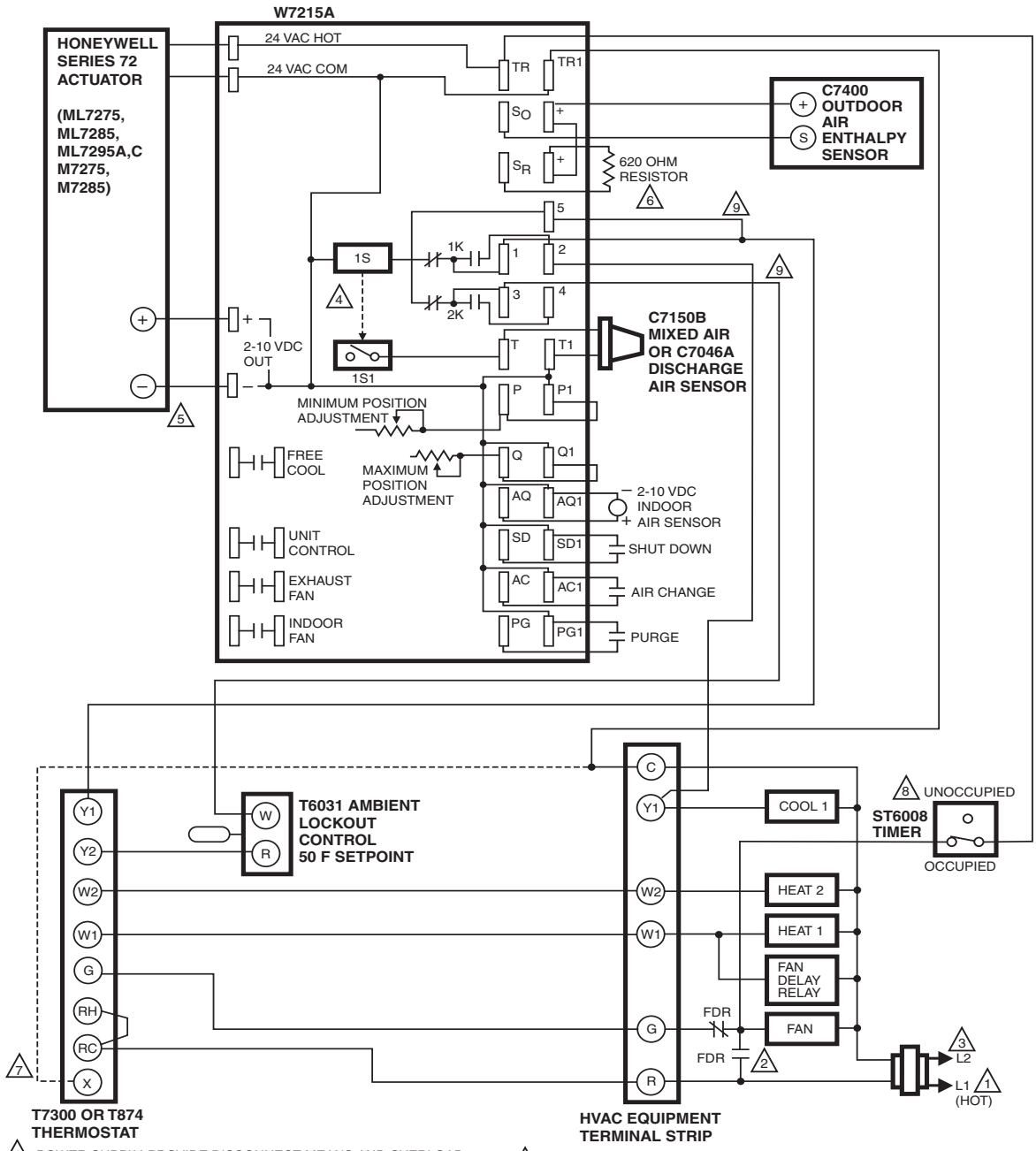

1 POWER SUPPLY. PROVIDE DISCONNECT MEANS AND OVERLOAD PROTECTION AS REQUIRED.

2 ACTUATOR SPRING-RETURNS CLOSED WHEN FAN IS NOT RUNNING.

3 ENSURE THAT TRANSFORMER IS SIZED TO HANDLE THE EXTRA LOAD OF THE ECONOMIZER AND ACTUATOR.

4 1S IS AN ELECTRONIC SWITCH THAT CLOSES WHEN POWERED BY A 24 VAC INPUT.

5 FOR THE ML7295A,C, USE THE 4-20mA MODEL ACTUATOR. THESE MODELS HAVE 500 OHM INPUT IMPEDENCE THAT ALLOWS THE ACTUATOR TO ACCEPT A 2-10 VDC SIGNAL.

6 FACTORY INSTALLED 620 OHM, 1 WATT, 5% RESISTOR SHOULD NOT BE REMOVED. DIFFERENTIAL ENTHALPY NOT RECOMMENDED FOR USE WITH SINGLE-STAGE COOLING SYSTEMS OR SINGLE-STAGE COOLING THERMOSTATS.

7 FOR T7300 ONLY.

8 FOR T7300, USE CONTACTS A1 AND A2 INSTEAD OF THE TIMER.

9 FOR TWO-STAGE COMMERCIAL THERMOSTATS ONLY.

M11804B

W7215A used in single-stage cooling system with single enthalpy changeover and Honeywell Series 72 Actuator

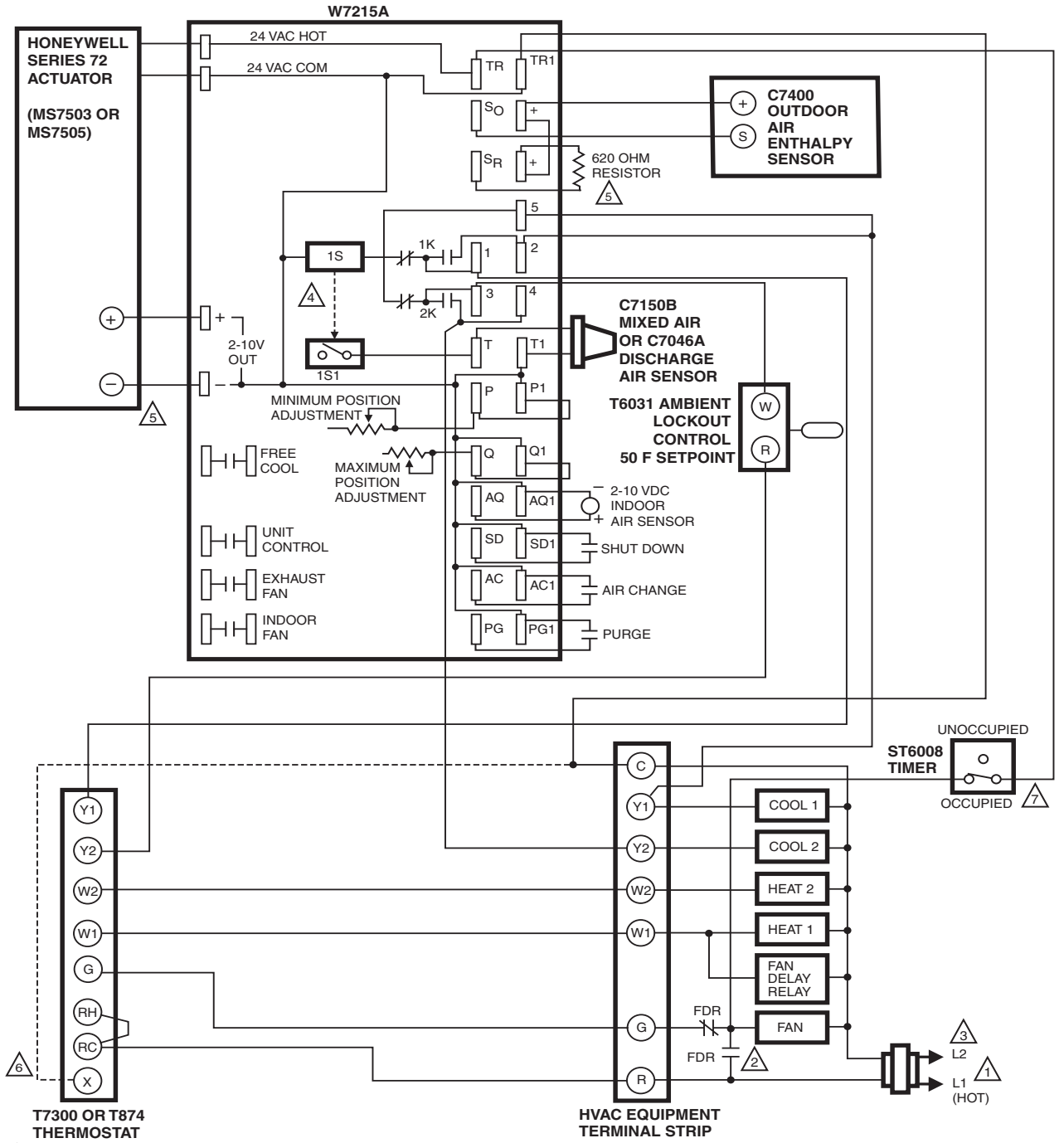

1 POWER SUPPLY. PROVIDE DISCONNECT MEANS AND OVERLOAD PROTECTION AS REQUIRED.

2 ACTUATOR SPRING-RETURNS CLOSED WHEN FAN IS NOT RUNNING.

3 ENSURE THAT TRANSFORMER IS SIZED TO HANDLE THE EXTRA LOAD OF THE ECONOMIZER AND ACTUATOR.

4 1S IS AN ELECTRONIC SWITCH THAT CLOSES WHEN POWERED BY A 24 VAC INPUT.

5 FACTORY INSTALLED 620 OHM, 1 WATT, 5% RESISTOR SHOULD BE REMOVED ONLY WHEN A C7400 ENTHALPY SENSOR IS ADDED TO S_R AND + FOR DIFFERENTIAL ENTHALPY.

6 FOR T7300 ONLY.

7 FOR T7300, USE CONTACTS A1 AND A2 INSTEAD OF THE TIMER.

M11801B

W7215A used in two-stage cooling system with Honeywell Series 72 Actuator

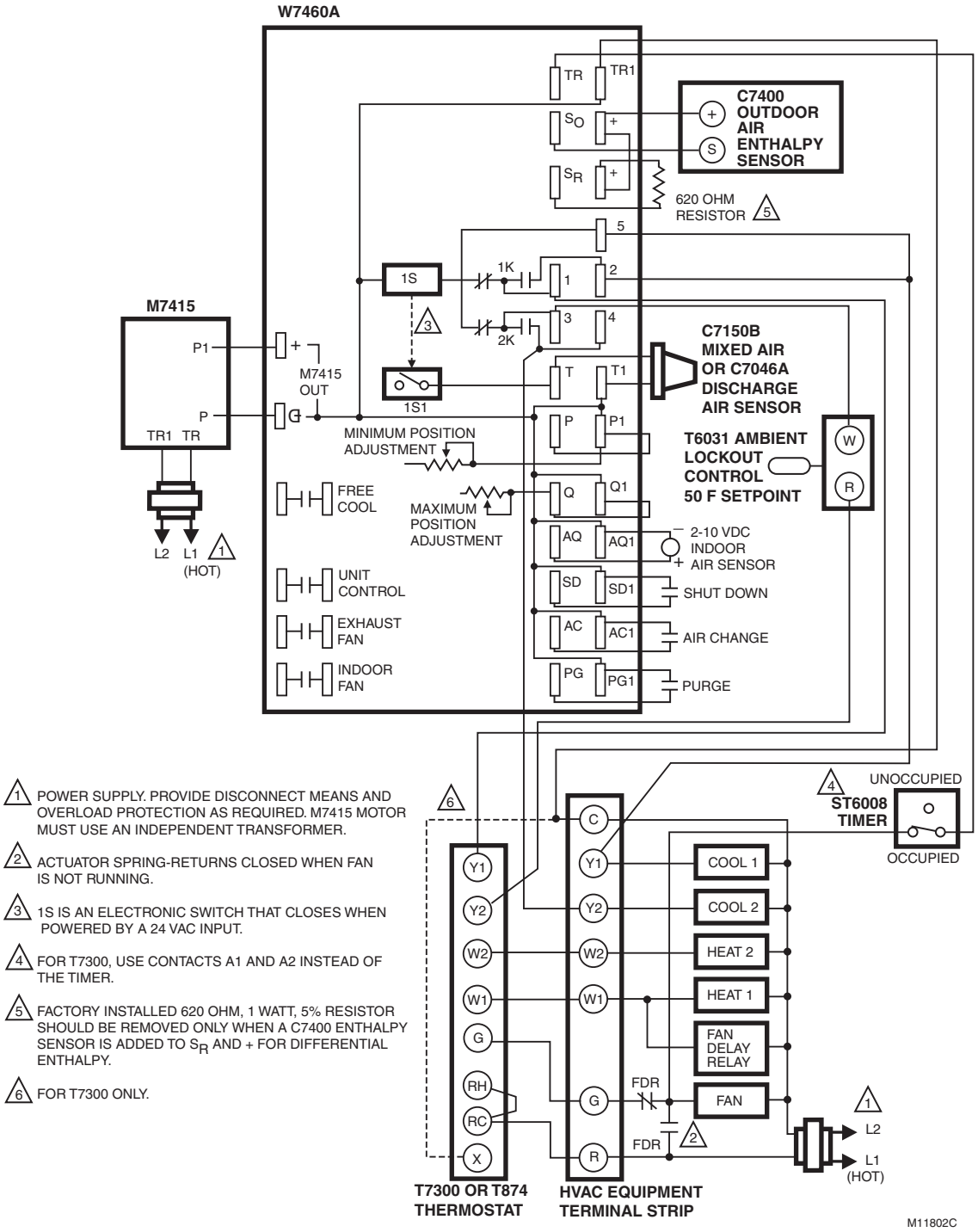

1. POWER SUPPLY. PROVIDE DISCONNECT MEANS AND OVERLOAD PROTECTION AS REQUIRED. M7415 MOTOR MUST USE AN INDEPENDENT TRANSFORMER.
2. ACTUATOR SPRING-RETURNS CLOSED WHEN FAN IS NOT RUNNING.
3. 1S IS AN ELECTRONIC SWITCH THAT CLOSES WHEN POWERED BY A 24 VAC INPUT.
4. FOR T7300, USE CONTACTS A1 AND A2 INSTEAD OF THE TIMER.
5. FACTORY INSTALLED 620 OHM, 1 WATT, 5% RESISTOR SHOULD BE REMOVED ONLY WHEN A C7400 ENTHALPY SENSOR IS ADDED TO S_R AND + FOR DIFFERENTIAL ENTHALPY.
6. FOR T7300 ONLY.

W7460A used in two-stage cooling system with M7415 Motors

Section 9 - W7212, W7213 and W7214 Economizer Modules

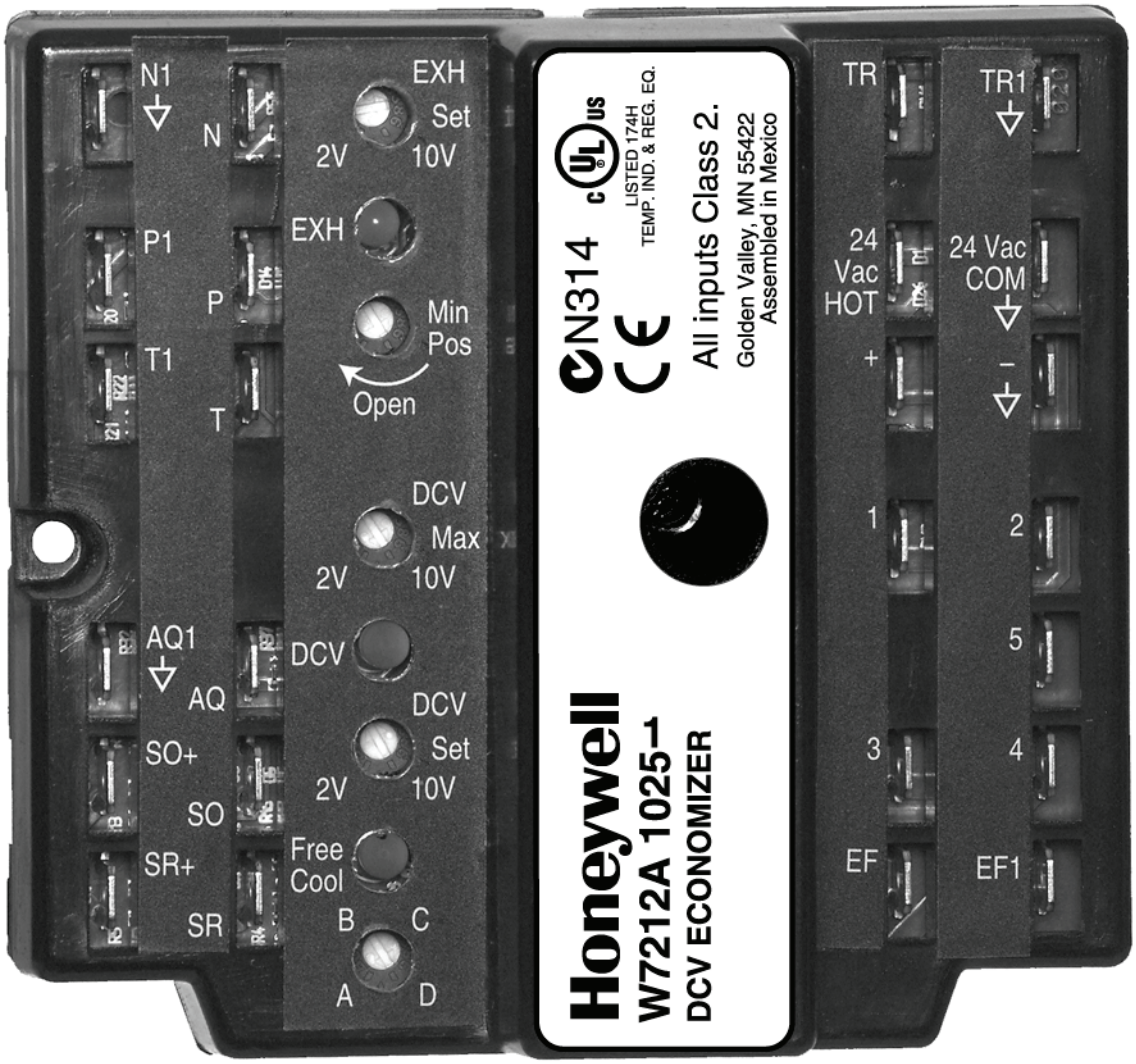

W7212 Economizer System Components

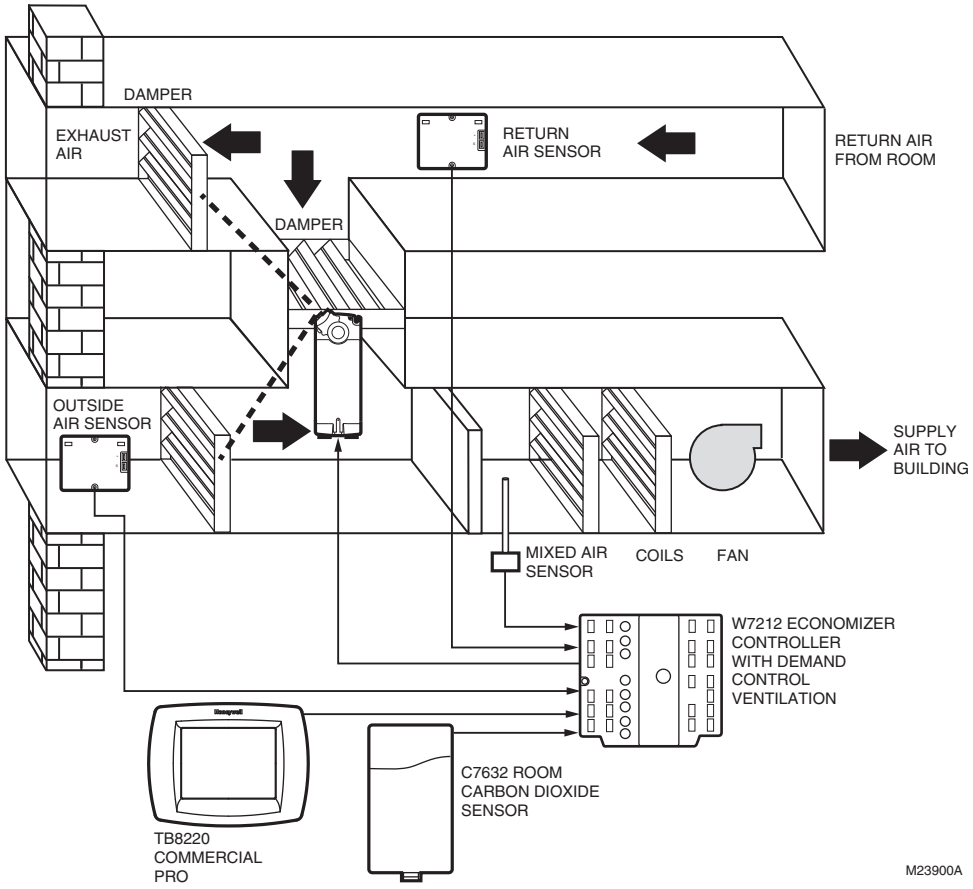

W7212, W7213, and W7214 Components

The W7212 DCV economizer logic module was the simplest and most popular analog economizer. It combined all of the benefits of the W7459 and W7210 with the some features of the W7215. It did not include shutdown, air change and purge but had an “N” terminal for occupancy. On W7213 and W7214 models N terminal is either B or O terminal for use with heat pumps.

There were three models:

- W7212A- Used with series 70 actuators including DCA’s and Modutrol Motors
- W7213A - Used with heat pumps or conventional rooftop units. B terminal energized in heating and unenergized in cooling
- W7214A - Used with heat pumps or conventional rooftop units. O terminal unenergized in heating and energized in cooling.

All models could be panel mounted or directly mounted to the M7215 motor.

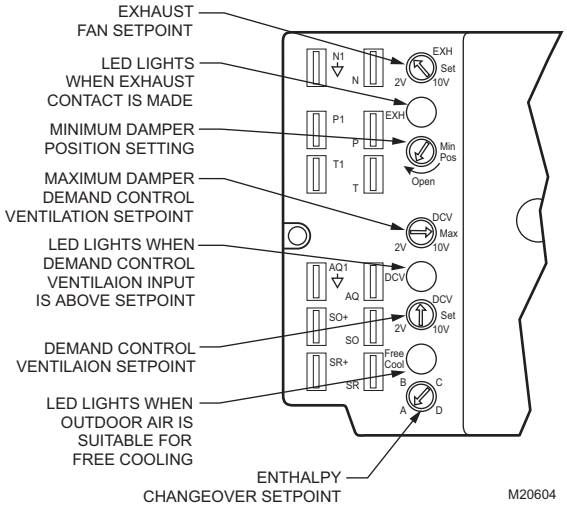

Potentiometer and LED locations (W7212 shown)

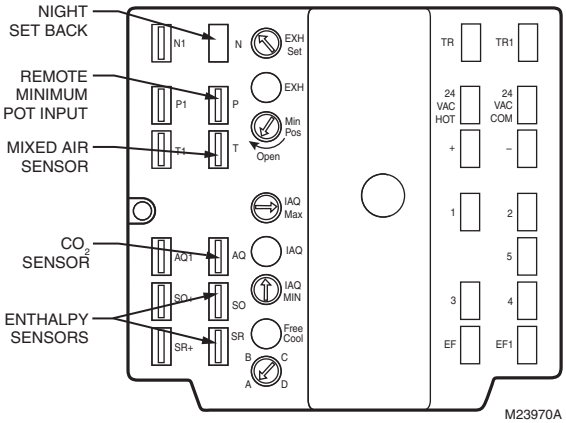

Power at the N terminal determines the Occupied/Unoccupied setting:

For the W7212:

- 24 Vac (Occupied)
- No power (Unoccupied)
- N terminal powered – Space Occupied:
  - — If No Call for cooling or bad outdoor enthalpy - dampers drive to minimum position
  - — If Call for cooling - dampers open to satisfy the mixed or discharge air sensor if outdoor air is good enthalpy
- N terminal unpowered – Space Unoccupied:
  - — If No call for cooling - damper drives closed if economizer is powered
  - — If Call for cooling - dampers open to satisfy the mixed or discharge air sensor if outdoor air is good enthalpy

All other inputs are same as other logic modules, for space consideration the enthalpy sensor terminals were moved to left side of control.

Same input for TR-TR1 for 24 Vac power to logic module and output to mechanical cooling.

Output for 2-10 Vdc and 24 Vac power to actuator is on the right side of the unit and power exhaust fan output.

The exhaust setpoint determines when the exhaust fan runs based on damper position. When the exhaust fan call is made, the module provides a 60 ±30 second delay before exhaust fan activation. This delay allows the damper to reach the appropriate position to avoid unnecessary fan overload.

EF and EF1 are 24V dry contacts only. An external line voltage contactor is required to operate the exhaust fan.

When the exhaust fan is deactivated the EF and EF1 relay opens immediately.

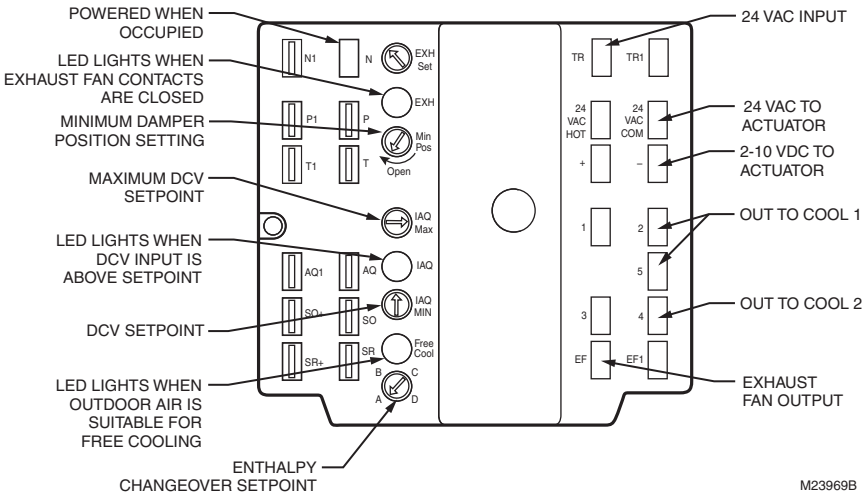

The exhaust setpoint determines when the exhaust fan runs based on damper position. Full CCW is fully closed damper position and Full CW is fully open damper position.

When the EF and EF1 contacts are made after the 60 ±30 sec. delay, the EXH LED will illuminate.

Damper minimum position and maximum position are the positions of the damper for ventilation for building contaminants and people occupancy. See section 1 for explanation of DCV and determination of damper settings.

DCV Maximum Position Adjustment

1. Disconnect mixed air sensor from terminals T and T1 and short terminals T and T1.
2. Connect a jumper between terminals AQ and SO+.
3. Connect 24 Vac across terminals TR and TR1.
4. Adjust the potentiometer on the face of the device with a screwdriver for desired maximum position.
5. If all minimum and maximum position adjustments are complete, remove the T-T1 jumper and reconnect the mixed air sensor.

When the mixed air sensor takes control based on an increased requirement for cooling, it overrides the DCV maximum position potentiometer and can drive the damper full-open.

If the mixed air temperature drops to 45°F, the mixed air sensor overrides the DCV and fully closes the damper to protect from freezing the hot or chilled water coils. Control returns to normal once the mixed air temperature rises to 48°F.

DCV setpoint is the same as the W7215. The setpoint is based on the output of the CO_2 sensor (e.g., 0-10 Vdc output for CO_2 ppm of 500-1500 ppm where 0 Vdc = 500 ppm and 10 Vdc = 1500 ppm. If setpoint is 1000 ppm or 6 Vdc, then the OA damper will begin to module open when output from CO_2 sensor is 6 Vdc). DCV LED light will illuminate when CO_2 level is above setpoint.

Using Multiple CO2 sensors on the AQ-AQ1 terminals for zones

You can add up to five (5) CO_2 sensors from different spaces to the W7212 economizer. The CO_2 sensor with the highest call will take precedence and the outdoor dampers will drive open based on the highest CO_2 sensor output OR the call for free cooling for the economizer. The other four (4) remaining spaces will be ventilated to the same level unless there is a mechanical ventilation limit in the system. There must be one schottky diode (BAT43 or IN5819) in series with the + from the sensor to the + (AQ) terminal on the W7212. Each sensor must have the diode in series. Each C7232 sensor puts out about 0.2 volts more than is put on the AQ+ line due to the inherent 0.2 volt drop across each diode. The AQ+ line will be 0.2 V lower than the highest C7232 output. When that output crosses the threshold set on the DCV set pot, the motor will drive towards open. You need to be aware that the AQ+ line will never reach 10 V but will max at near 9.8 V due to the diodes.

Free cool LED illuminates when outdoor air is suitable for free cooling whether Y1 from the commercial thermostat is calling for cooling or not.

The W7212 uses the electronic A, B, C, D and high enthalpy curves on the psychrometric chart.

Minimum Position Adjustment

The following provides basic guidelines for minimum position selection and adjustment:

IMPORTANT

Adjust the minimum position potentiometer to allow the minimum amount of outdoor air for building effluents, as required by local codes, to enter the building. This procedure requires use of a quality thermometer capable of reading to 0.5°F (0.25°C).

NOTE: Make minimum position adjustments with at least a 10°F (-12°C) temperature difference between outdoor and return air.

1. Calculate the appropriate mixed air temperature, see the Equation below.
2. Disconnect mixed air sensor from terminals T and T1.
3. Place a jumper across terminals T and T1.
4. Ensure that either the factory-installed jumper is in place across terminals P and P1 or, if remote damper position is required, that it is wired according to the image below, turned fully clockwise.

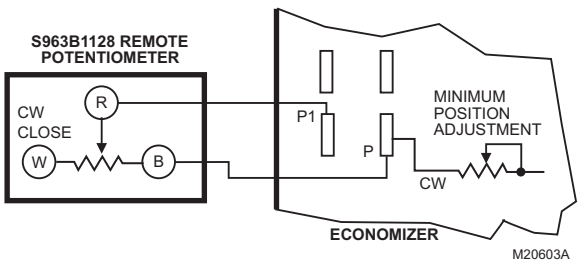

S963B1128 Remote Potentiometer used with logic module for remote damper control

5. Connect 24 Vac across terminals TR and TR1.
6. Carefully adjust the potentiometer on the face of the device with a small screwdriver until the mixed air temperature reaches the calculated value.

   NOTE: Ensure that the sensed air is well mixed.

7. If all minimum and maximum position adjustments are complete, remove the T-T1 jumper and reconnect the mixed air sensor.

Formula to aid minimum position adjustment

$(T_O \times OA) + (T_R \times RA) = T_M$

Where:
T_O = Outdoor air temperature
OA = Percent of outdoor air
T_R = Return air temperature
RA = Percent of return air
T_M = Resulting mixed air temperature

NOTE: The following sample calculation uses only Fahrenheit temperature.

EXAMPLE: Assume local codes require 10% outdoor air during occupied conditions, outdoor air is 60°F and return air is 75°F. Under these conditions, what is the temperature of the mixed air?

(0.1 × 60°F) + (0.9 × 75°F) =

6.0°F + 67.5°F = 73.5°F

Mixed air will be 73.5°F when OA is 60°F and RA is 75°F with 10% outdoor air.

Dry bulb changeover

Single or differential economizing can be accomplished using temperature instead of enthalpy. With any of the analog economizers you need to use a C7660 dry bulb sensor with a 4mA or 20 mA output to the economizers for single (referential) changeover. The sensor determines if the outdoor air is above or below the selected setpoint and either sends a 4 mA signal (NOT OK to economize) or a 20mA signal (OK to economize) to the logic module.

For differential changeover you need to use a C7650 sensor in the outdoor air and a C7650 sensor in the return air. CAUTION: You cannot use a C7760 sensor in the outdoor air and one in the return air for differential control, the system will not work.

See the sensor section of this manual for additional explanation of the sensor operation.

W7212, W7213, and W7214 Wiring Diagram

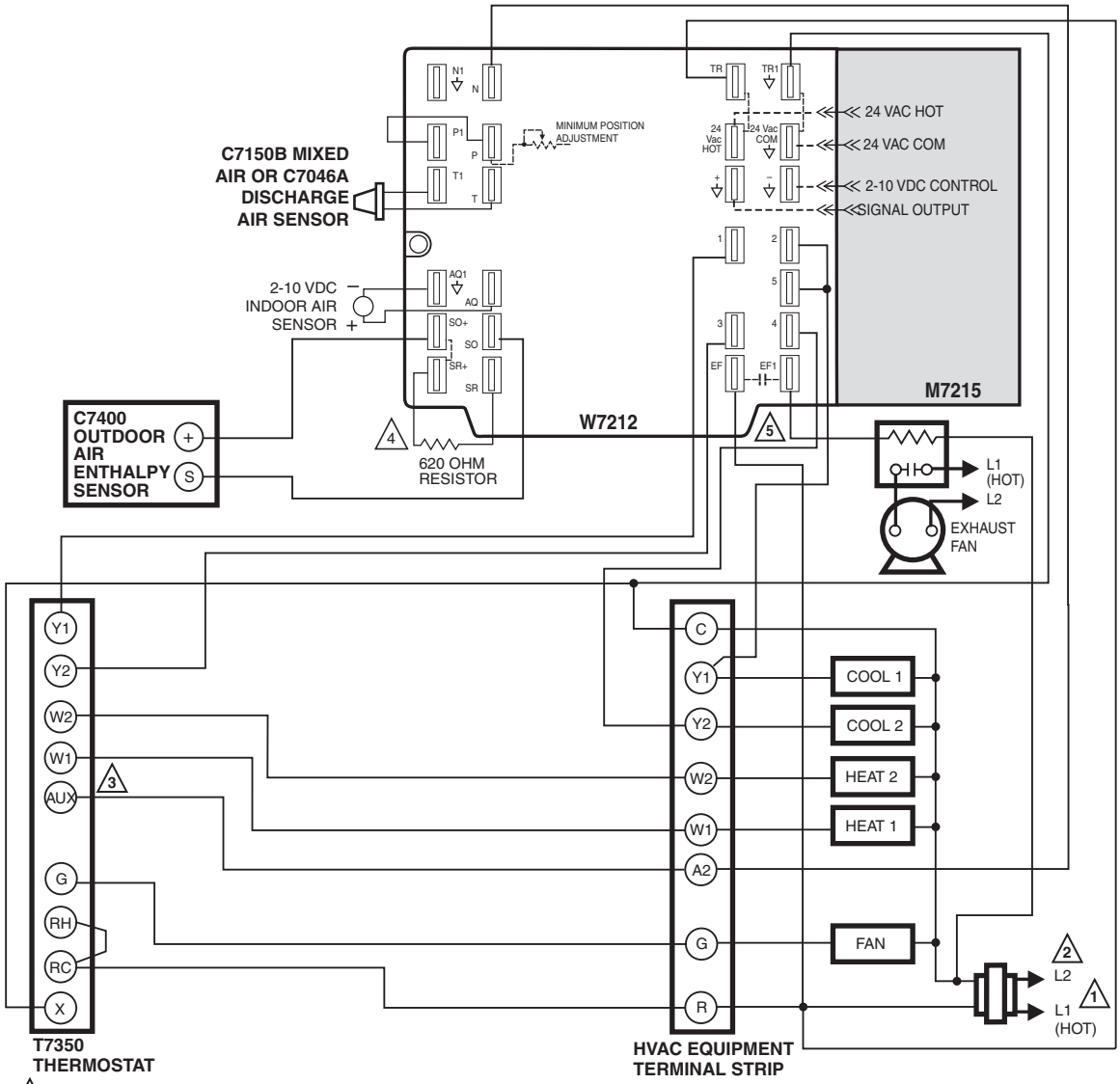

1. POWER SUPPLY. PROVIDE DISCONNECT MEANS AND OVERLOAD PROTECTION AS REQUIRED.
2. ENSURE THAT TRANSFORMER IS SIZED TO HANDLE THE EXTRA LOAD OF THE ECONOMIZER AND ACTUATOR. THE SAME TRANSFORMER CAN BE USED FOR THE COMMERCIAL THERMOSTAT AND ACTUATOR.
3. IF SEPARATE HEATING AND COOLING TRANSFORMERS ARE USED, REMOVE JUMPER AT THERMOSTAT. T7350 - TERMINAL “AUX” IS POWERED BY THE HEATING TRANSFORMER (RH). IF POWERING THE ECONOMIZER TERMINAL “N” WITH THE THERMOSTAT TERMINAL “AUX”, BE SURE THE ECONOMIZER IS POWERED BY THE SAME TRANSFORMER AS TERMINAL “AUX”. IF NOT, USE AN ISOLATION RELAY TO POWER “N”.
4. FACTORY INSTALLED 620 OHM, 1 WATT, 5% RESISTOR SHOULD NOT BE REMOVED. DIFFERENTIAL ENTHALPY NOT RECOMMENDED FOR USE WITH SINGLE-STAGE COOLING SYSTEMS OR SINGLE-STAGE COOLING THERMOSTATS.
5. EF AND EF1 ARE DRY CONTACTS IN THE LOGIC MODULE.

M13657C

W7212 used with M7215 Damper Motor and T7350 Thermostat

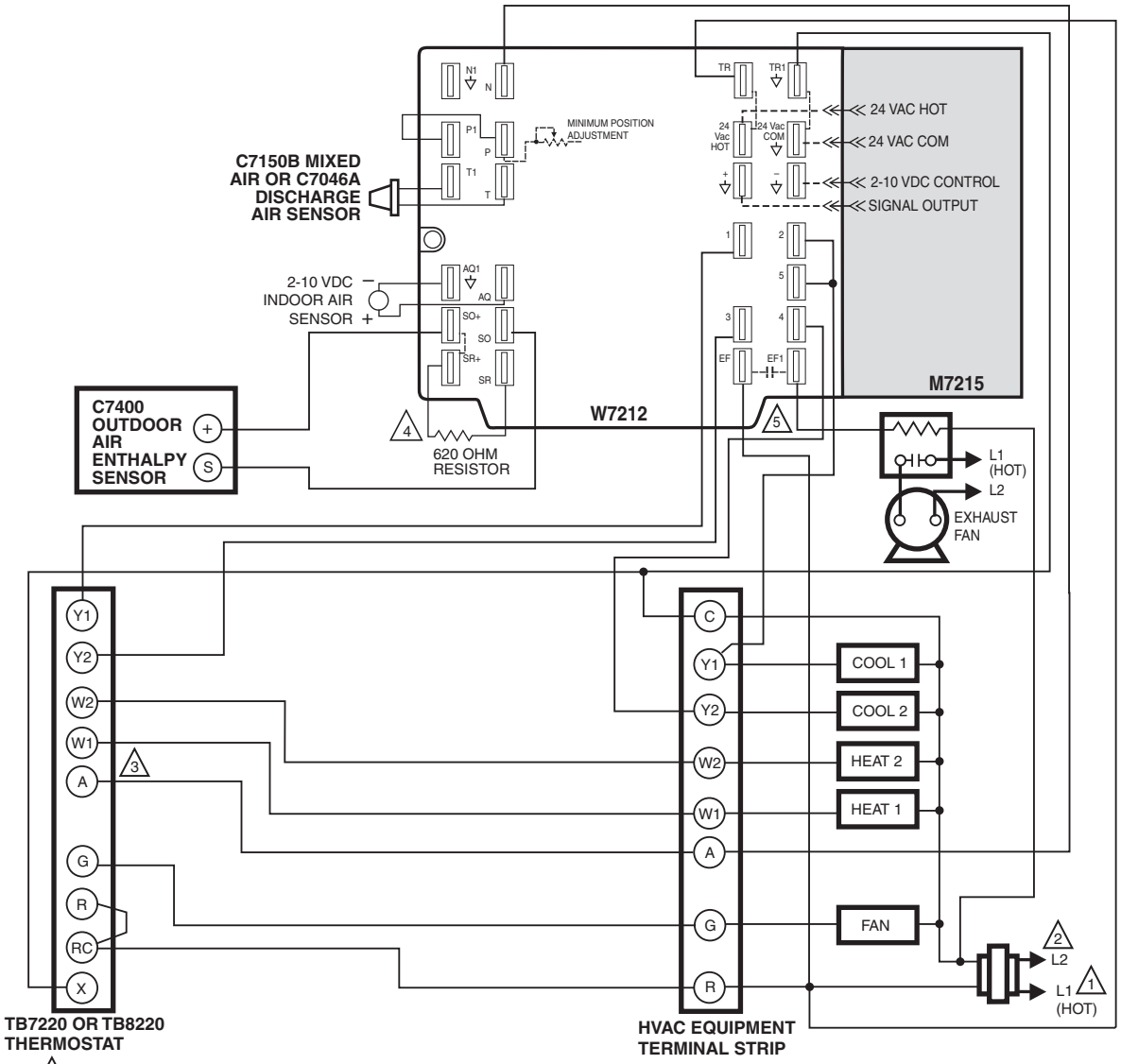

1. POWER SUPPLY. PROVIDE DISCONNECT MEANS AND OVERLOAD PROTECTION AS REQUIRED.
2. ENSURE THAT TRANSFORMER IS SIZED TO HANDLE THE EXTRA LOAD OF THE ECONOMIZER AND ACTUATOR. THE SAME TRANSFORMER CAN BE USED FOR THE COMMERCIAL THERMOSTAT AND ACTUATOR.
3. IF SEPARATE HEATING AND COOLING TRANSFORMERS ARE USED, REMOVE JUMPER AT THERMOSTAT.
   TB7220 - TERMINAL "A" IS POWERED BY THE COOLING TRANSFORMER (RC).
   TB8220 - TERMINAL "A" IS POWERED BY THE HEATING TRANSFORMER (R).
   IF POWERING THE ECONOMIZER TERMINAL "N" WITH THE THERMOSTAT TERMINAL "A", BE SURE THE ECONOMIZER IS POWERED BY THE SAME TRANSFORMER AS TERMINAL "A". IF NOT, USE AN ISOLATION RELAY TO POWER "N".
4. FACTORY INSTALLED 620 OHM, 1 WATT, 5% RESISTOR SHOULD NOT BE REMOVED. DIFFERENTIAL ENTHALPY NOT RECOMMENDED FOR USE WITH SINGLE-STAGE COOLING SYSTEMS OR SINGLE-STAGE COOLING THERMOSTATS.
5. EF AND EF1 ARE DRY CONTACTS IN THE LOGIC MODULE.

M13658C

W7212 used with M7215 Damper Motor and TB7220 or TB8220 Thermostats

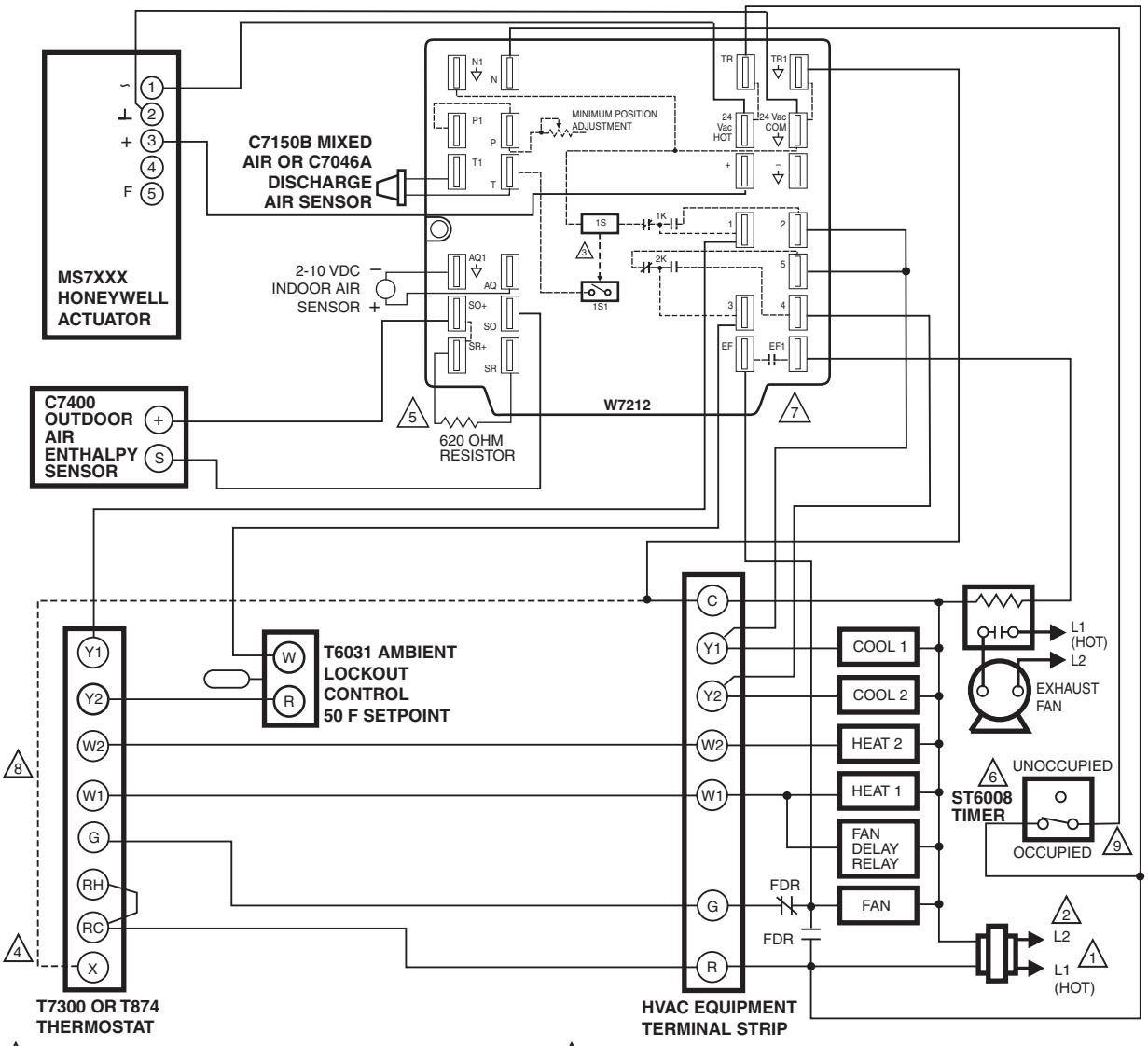

1 POWER SUPPLY. PROVIDE DISCONNECT MEANS AND OVERLOAD PROTECTION AS REQUIRED.

2 ENSURE THAT TRANSFORMER IS SIZED TO HANDLE THE EXTRA LOAD OF THE ECONOMIZER AND ACTUATOR.

3 1S IS AN ELECTRONIC SWITCH THAT CLOSES WHEN POWERED BY A 24 VAC INPUT.

4 FOR T7300 ONLY

5 FACTORY INSTALLED 620 OHM, 1 WATT, 5% RESISTOR SHOULD BE REMOVED ONLY WHEN A C7400 ENTHALPY SENSOR IS ADDED TO SR AND SR+ FOR DIFFERENTIAL ENTHALPY.

6 USE THE FOLLOWING CONTACTS INSTEAD OF TIMER
FOR T7300, USE A1 AND A2 TERMINALS.
FOR T7350 USE AUX TERMINAL.
FOR TB7220 OR TB8220 USE A TERMINAL
THE TERMINALS ARE CONNECTED WHEN THERMOSTAT IS IN THE OCCUPIED MODE.

7 EF AND EF1 ARE DRY CONTACTS IN THE LOGIC MODULE.

8 SEE WIRING DIAGRAMS FIGS 9 AND 10 FOR T7350 AND TB7220/TB8220.

9 TIME CLOCK IS AN OPTION TO USING OCCUPIED CONTACTS ON THE COMMERCIAL THERMOSTAT.

M13660B

W7212A used in two-stage cooling system with Honeywell Series 72 Actuator and time clock for occupancy

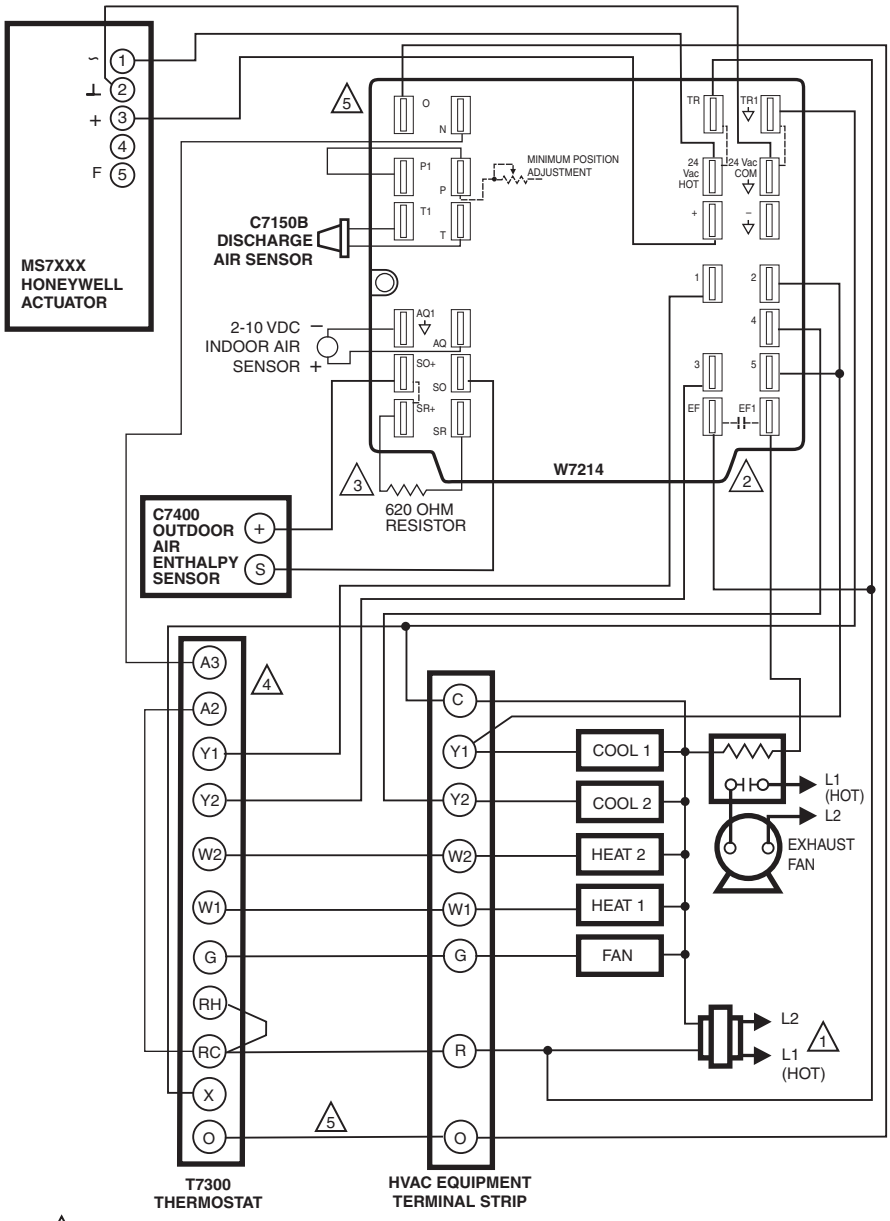

1 POWER SUPPLY. PROVIDE DISCONNECT MEANS AND OVERLOAD PROTECTION AS REQUIRED.

2 EF AND EF1 ARE DRY CONTACTS IN THE LOGIC MODULE.

3 FACTORY INSTALLED 620 OHM, 1 WATT, 5% RESISTOR SHOULD BE REMOVED ONLY WHEN A C7400 ENTHALPY SENSOR IS ADDED TO SR AND SR+ FOR DIFFERENTIAL ENTHALPY.

4 T7300 TERMINALS A2 AND A3 ARE CONNECTED WHEN THERMOSTAT IS IN THE UNOCCUPIED MODE. SEE T7350 AND TB7220/TB8220 WIRING.

5 W7213: B TERMINAL
W7214: O TERMINAL

M19618E

W7213, W7214 controlling heat pump system

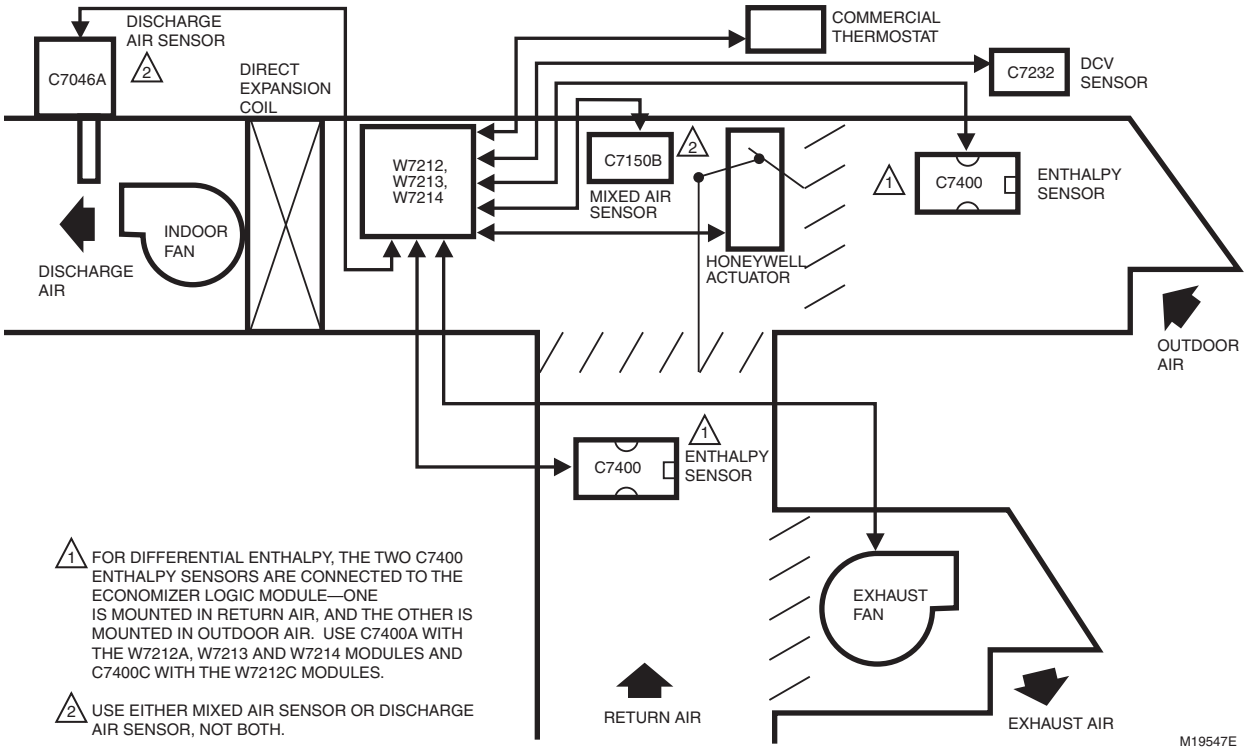

Representative locations of connected economizer system devices

Section 9 - W7212, W7213 and W7214 Economizer Modules

Section 10 - W7340 and W7345 Economizer Module

W7340 Economizer System Components

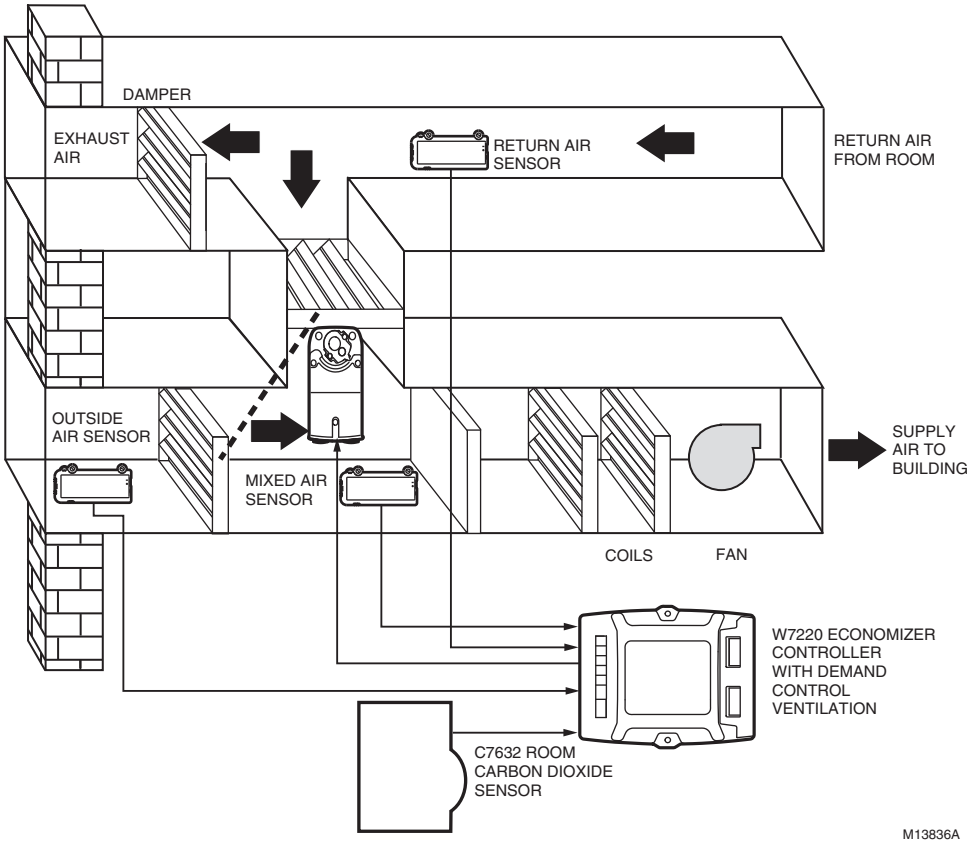

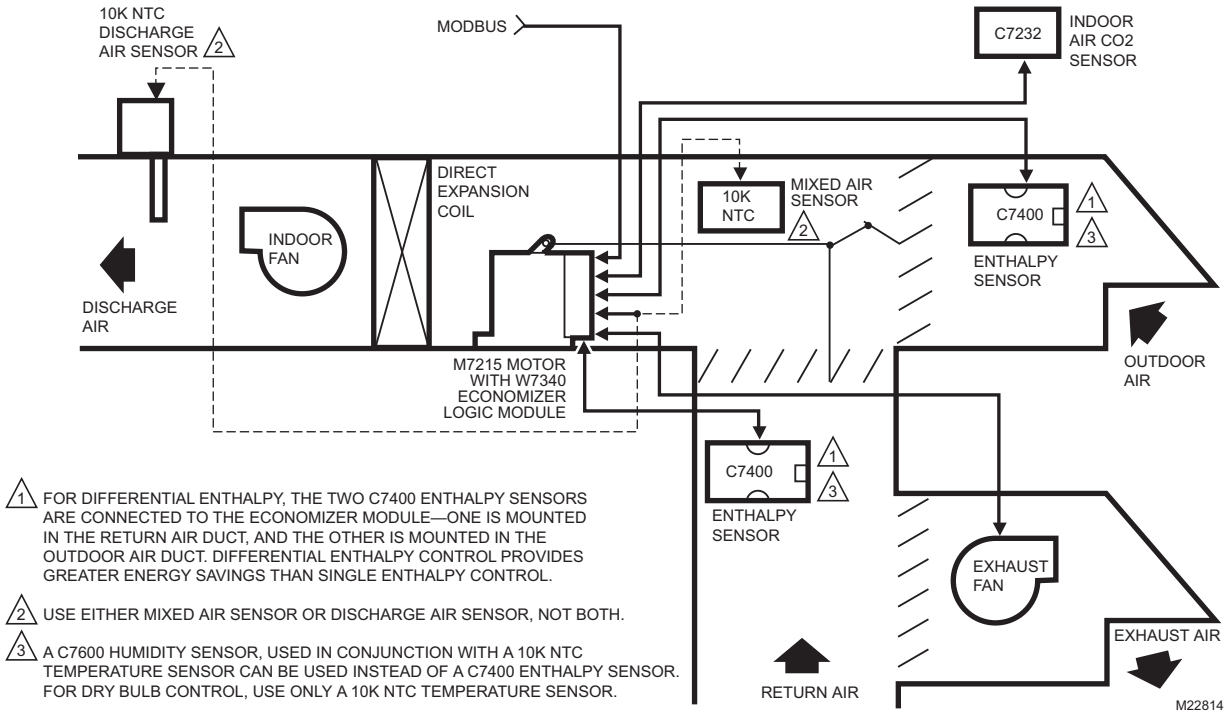

1 FOR DIFFERENTIAL ENTHALPY, THE TWO C7400 ENTHALPY SENSORS ARE CONNECTED TO THE ECONOMIZER MODULE—ONE IS MOUNTED IN THE RETURN AIR DUCT, AND THE OTHER IS MOUNTED IN THE OUTDOOR AIR DUCT. DIFFERENTIAL ENTHALPY CONTROL PROVIDES GREATER ENERGY SAVINGS THAN SINGLE ENTHALPY CONTROL.

2 USE EITHER MIXED AIR SENSOR OR DISCHARGE AIR SENSOR, NOT BOTH.

3 A C7600 HUMIDITY SENSOR, USED IN CONJUNCTION WITH A 10K NTC TEMPERATURE SENSOR CAN BE USED INSTEAD OF A C7400 ENTHALPY SENSOR. FOR DRY BULB CONTROL, USE ONLY A 10K NTC TEMPERATURE SENSOR.

Representative Locations of Connected W7340 Economizer System Devices

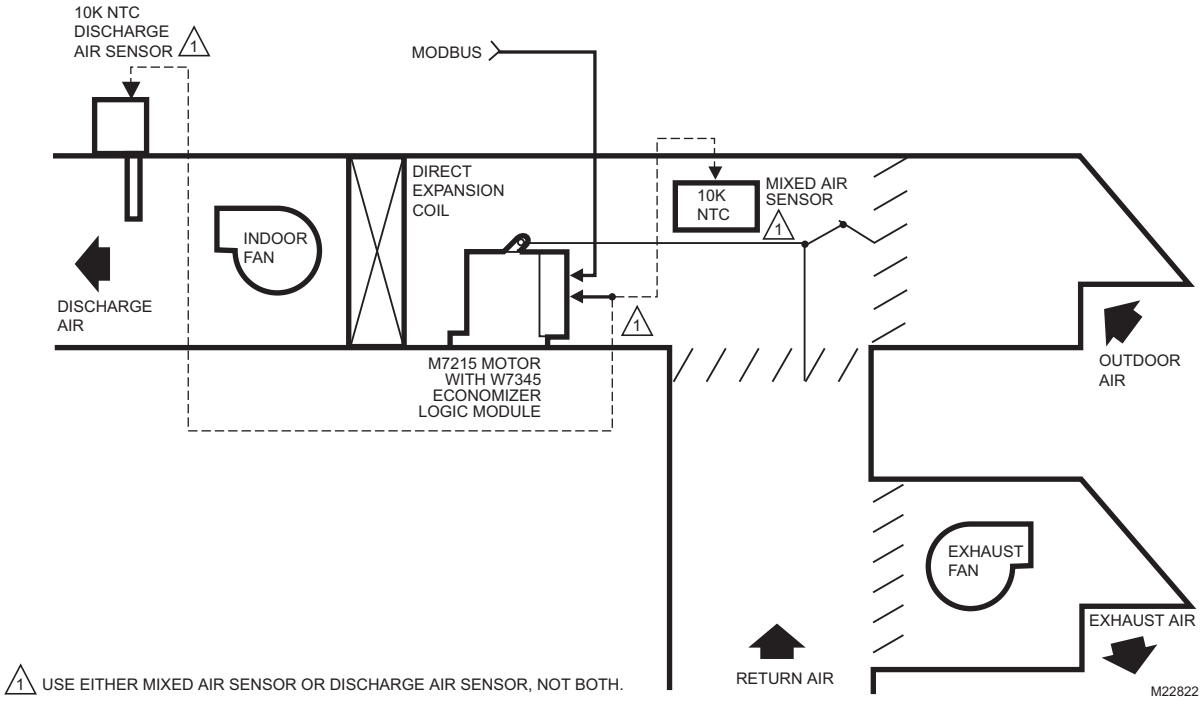

1 USE EITHER MIXED AIR SENSOR OR DISCHARGE AIR SENSOR, NOT BOTH.

Representative Locations of Connected W7345 Economizer System Devices

W7340 and W7345 Components

The W7340 is a full enthalpy economizer used in a Trane unit to provide a totally integrated control system.

The W7345 provides temperature (OAT) control only; it does not have an option for a RAT, DCV sensor or exhaust control.

The W7340, when wired as shown below responds to a signal from a modified Modbus command. This system uses C7400 Solid State Enthalpy Changeover Sensor(s). The C7400 Enthalpy Sensors respond to both dry bulb temperature and humidity, allowing use of outdoor air at higher temperatures for free cooling when humidity is low.

The logic module functions as a first stage of cooling and provides maximum energy savings during the cooling cycle. The logic module automatically locks out free cooling during heating and holds the outdoor air damper at the DCV minimum setting.

Table 1 details the input/output (I/O) logic of the W7340. The logic module energizes the Unit Control and Indoor Fan contacts, and operates according to Table 1.

Table 1. W7340 Economizer I/O Logic.

Inputs					Outputs		
	Enthalpy[a]				Compressor		
DCV	Outdoor	Return	Y1[b]	Y2[b]	Stage 1	Stage 2	Damper
Below set	High	Low	On	On	On	On	Minimum position
			On	Off	On	Off	
	Low	High	On	On	On	Off	Modulating[c]
			On	Off	Off	Off	
Above set	High	Low	On	On	On	On	Modulating[d]
			On	Off	On	Off	
	Low	High	On	On	On	Off	Modulating[e]
			On	Off	Off	Off	

[a] For single enthalpy control, the module compares outdoor enthalpy to the ABCDE setpoint.

[b] If both stages of cooling are off, the system is off and the damper is:
- **— At DCV minimum position if DCV is below setpoint.**
- **— Modulating if DCV is above setpoint.**

[c] Modulation based on mixed air sensor signal, modulating between DCV minimum position and 100% open.

[d] Modulation based on DCV signal, limited by minimum position.

[e] Modulation based on the greater of the DCV and mixed air sensor signals.

W7340 only

To measure enthalpy, the logic module accepts signals from either:
- C7600C Humidity and 10K NTC temperature sensors.
- or a C7400 Enthalpy Sensor.
- OR from the Trane controller via modified Modbus communications link.

When using C7400 Enthalpy Sensors; connect the enthalpy sensors to the humidity sensor terminals; leave the temperature sensor terminals empty.
- Use C7400A sensor with W7340A or W7340B.
- Use a C7400C sensor with W7340C.

The local method (changing configuration from Modbus) of configuring the Economizer for enthalpy or humidity sensors is:
- Short out the external minimum damper position terminals during the first three seconds after boot-up will cause the LED to go solid on within 5 seconds.
- Maintain the short for another 5 seconds will cause LED to flash quick pulses, indicating the type of configuration.
- 2 pulses between off periods indicates the Economizer is configured for Humidity sensors. 3 pulses means it is configured for Enthalpy sensors.

The configuration can be toggled between Humidity and Enthalpy by releasing the short for approximately 5 seconds, until the LED goes solid again, and then reapplying the short for another 5 seconds.

The toggling is indicated by the new LED flash sequence. This can be performed as many times as desired, and the most recent configuration will be saved when the short is removed for over 10 seconds.

Demand Control Ventilation (DCV) Sensor Input (W7340 only)

The DCV sensor can be any sensor that provides a 2-10 Vdc output over a range of 500 to 1500 ppm of CO_2. The DCV signal modulates the outdoor damper to provide ventilation based on occupancy.

The W7340A and B modules do not have the ability to set the outdoor air damper to a maximum position for DCV, they incorporate a minimum position setting that defaults to 20% but can be overridden using the on-board pot or the modified Modbus communication link to a maximum of 50% open.

The maximum position sets the damper position to a position that the damper goes to if the CO_2 sensor fails. If the minimum position set point is higher than the DCV maximum position, on sensor failure, the damper goes to the higher of the two of DCV maximum and minimum position setting.

There is no limit on the damper position on a call from the CO_2 sensor (DCV). It can go 100% open.

The W7340C DCV economizer logic module has the ability to set DCV minimum damper and minimum position. The DCV minimum position is set to ventilate the building contaminants and the minimum position is set to ventilate for the building contaminants and the building occupants. The installer sets the damper DCV minimum position and the minimum position based on the design occupancy and cfm of outdoor air requirements for the space. The damper will modulate open between the DCV minimum damper position and the minimum position based on input from a CO_2 sensor. The damper will not drive 100% open on a call for ventilation, but can drive 100% open on a call for cooling. If the CO_2 sensor fails the damper

will drive to the minimum position ventilating for building contaminants and the building occupants.

The W7340C does not have a separate potentiometer to select the new DCV minimum damper position. The following procedure allows the installer to set the new DCV minimum position.

DCV Minimum and Minimum Position Damper Set Up

Set up instructions for W7340C DCV damper positions:

1. Remove RAT sensor from RAT terminals.
2. Connect CO_2 sensor to DCV terminals.
3. Apply power to economizer logic module.
4. Wait 10 to 15 seconds for the CO_2 sensor to initialize. Short RAT terminals.
5. Remove CO_2 sensor from DCV terminals.
6. DCV LED will blink 2 times. If LED does not blink, cut power to economizer logic and repeat steps 1-5.
7. Set DCV minimum position using MIN POS/DCV MIN potentiometer.
8. Remove RAT short.
9. DCV minimum position is saved to memory and DCV LED blinks 5 times.
10. Turn off power to economizer logic module.
11. Connect RAT sensor.
12. Turn power on to economizer logic module.
13. Set minimum position using MIN POS/ DCV MIN

IMPORTANT

Steps 3-8 must be completed within 3 minutes after power up otherwise the configuration process will be terminated, no changes will be saved and you will need to repeat steps 1-13.

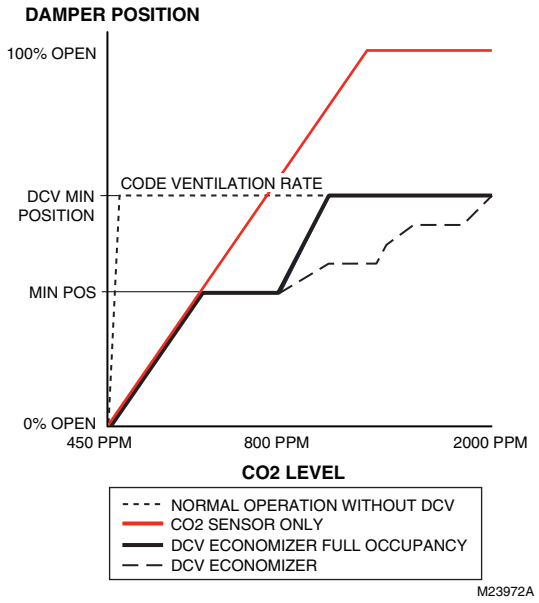

W7340 Demand Control Ventilation

Unlike the W7215 and W7212, which have minimum position for the Building contaminants and DCV maximum for the total ventilation required by design, the W7340C has different labels for the same functions. DCV minimum is the same as the W7212 minimum position and the minimum position for W7340C is the DCV maximum on the W7212.

It is VERY IMPORTANT to know the difference between the various suppliers equipment as what they are referring to in their control language. If the W7340 or W7345 unit is not black in color then the economizer controller is not made by Honeywell and the operation of the unit may not follow the description in this manual. Contact the OEM of the equipment for operation.

Settings and Adjustment

W7345

Potentiometers located on the face of the W7345, provide adjustments for Minimum Damper Position parameters (see below).

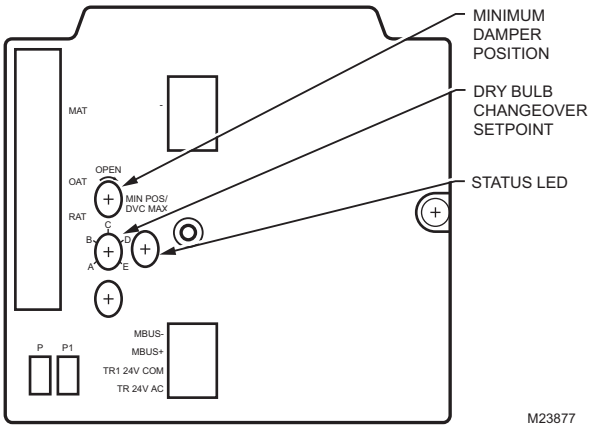

Location of W7345 potentiometers and LED

W7340

Using the DCV potentiometer, the setpoint can be adjusted until three minutes after powering the device. Through the Modbus, the DCV setpoint can be modified at any time. If the DCV potentiometer is changed after the three minute power-up time, no change to the DCV setpoint will occur unless power is removed from the device then reapplied.

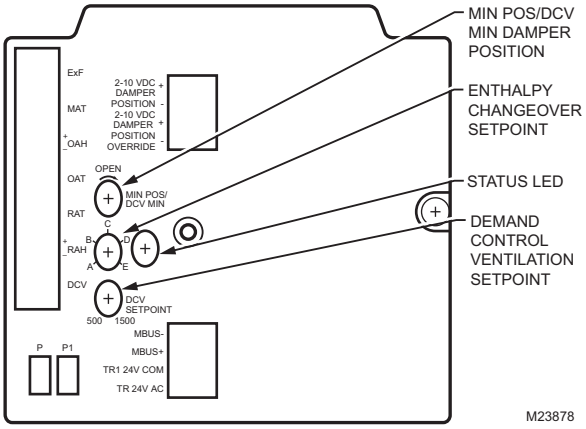

Location of W7340 potentiometers and LED

If the mixed air temperature drops to 45°F (7°C), the mixed air sensor overrides the DCV sensor and closes the damper to DCV minimum position to protect the hot or chilled water coils from freezing. When the mixed air temperature rises to 48°F (9°C), control reverts to normal operation.

Exhaust Setpoint (W7340 only)

The exhaust setpoint determines when the exhaust fan will run based on the damper position, this function is the same as the exhaust setpoint on the W7215 and W7212 except, as shipped from the factory, the W7340 uses an exhaust setpoint of 25%. When the damper position is greater than 25% open (from fully closed), the logic module calls for exhaust. When the damper position is below 22% open, the exhaust relay is de-energized.

The W7340C has an E curve in addition to the A, B, C and D curves. See the chart below showing location of E curve on Psychrometric chart.

CONTROL CURVE	CONTROL POINT APPROX. °F (°C) AT 50% RH
A	73 (23)
B	70 (21)
C	67 (19)
D	63 (17)
E	55 (13)

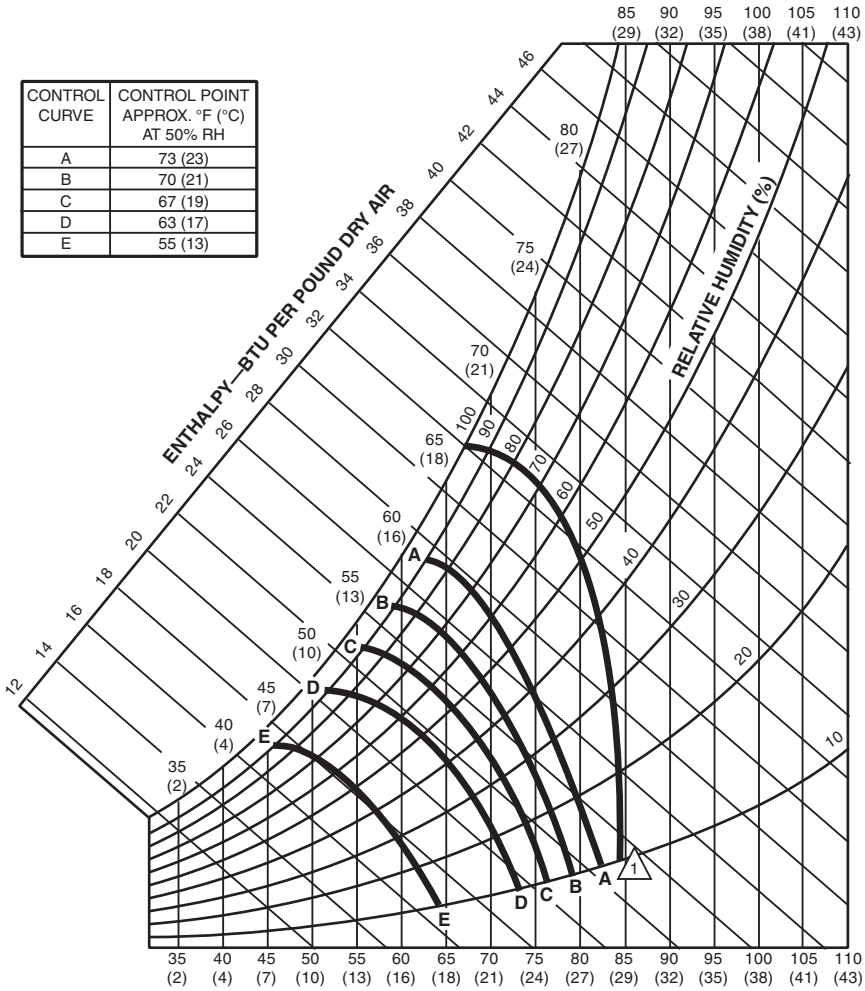

W7340 Performance Characteristics for Enthalpy Changeover Settings

Wiring for W7340 and W7345

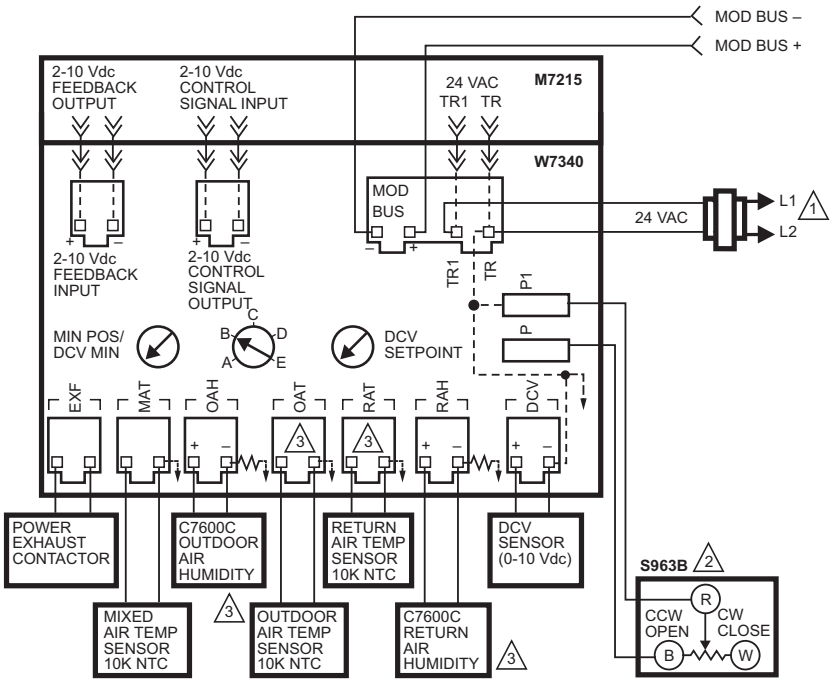

1 PROVIDE DISCONNECT MEANS AND OVERLOAD PROTECTION AS REQUIRED.

2 OPTIONAL REMOTE MINIMUM POSITION POTENTIOMETER.

3 WHEN USING C7400 ENTHALPY SENSORS, CONNECT THE ENTHALPY SENSOR TO THE HUMIDITY SENSOR TERMINALS. LEAVE THE TEMPERATURE SENSOR TERMINALS EMPTY.

M23875

W7340 Typical Wiring

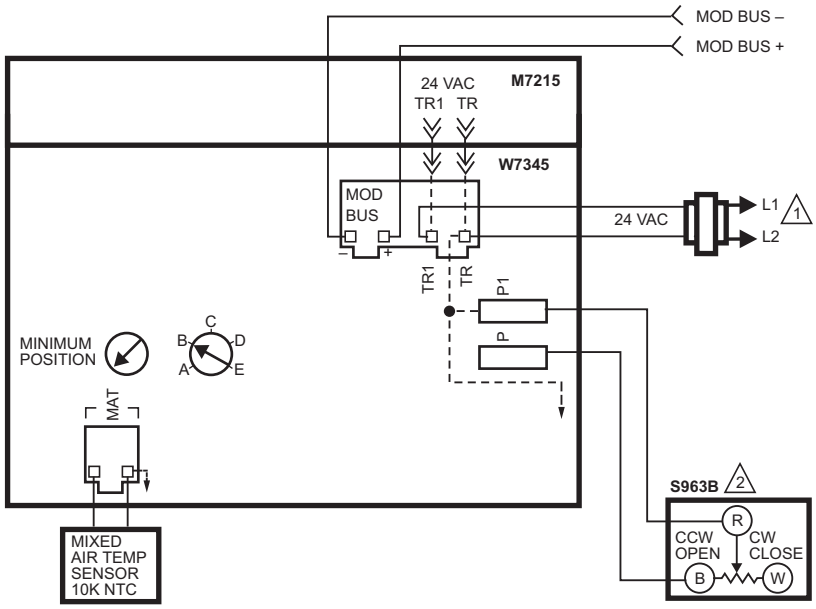

1 PROVIDE DISCONNECT MEANS AND OVERLOAD PROTECTION AS REQUIRED.

2 OPTIONAL REMOTE MINIMUM POSITION POTENTIOMETER.

M23876

W7345 Typical Wiring.

Section 11 - W7220 JADE™ Economizer Module

W7220 Economizer System Components

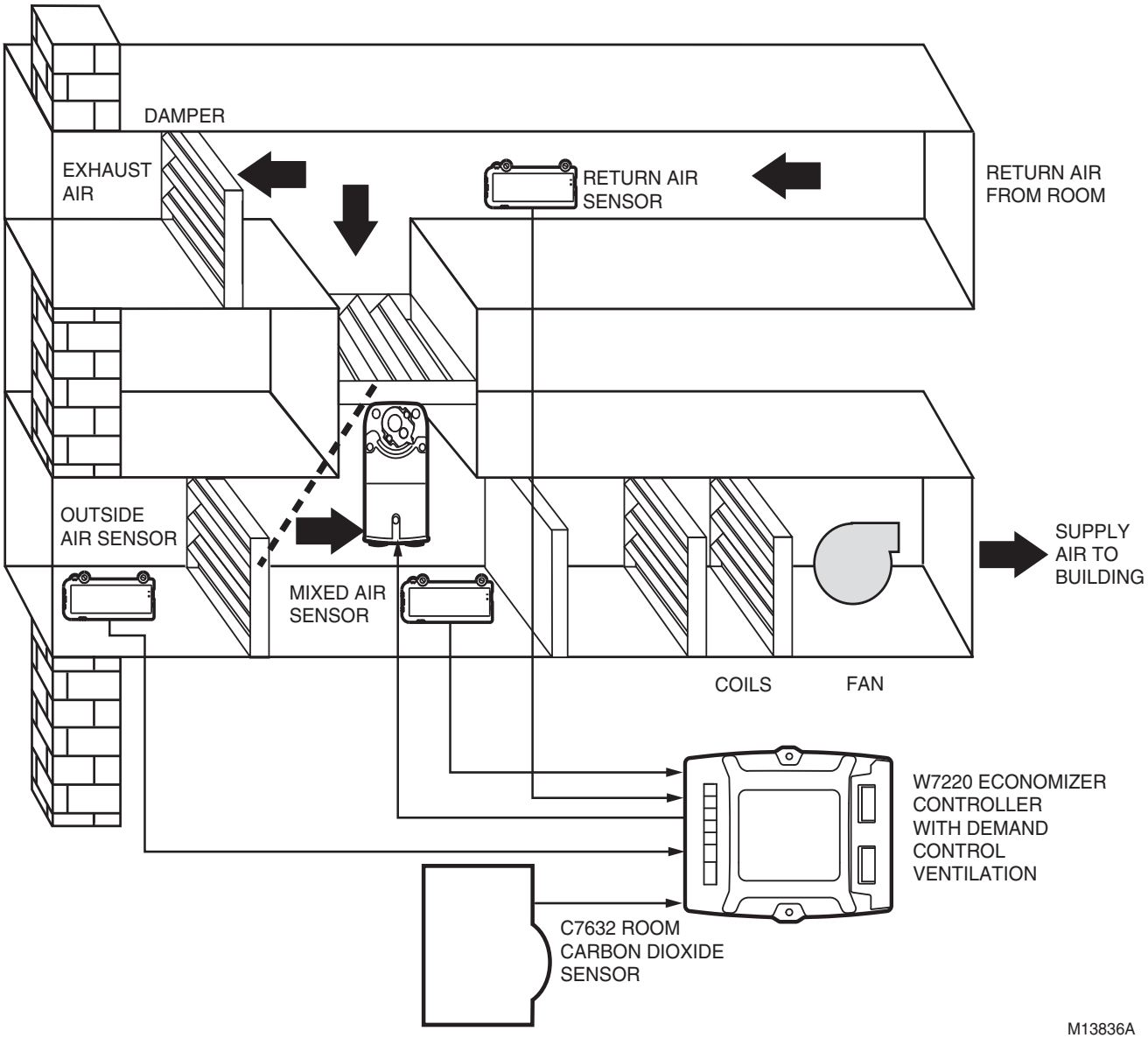

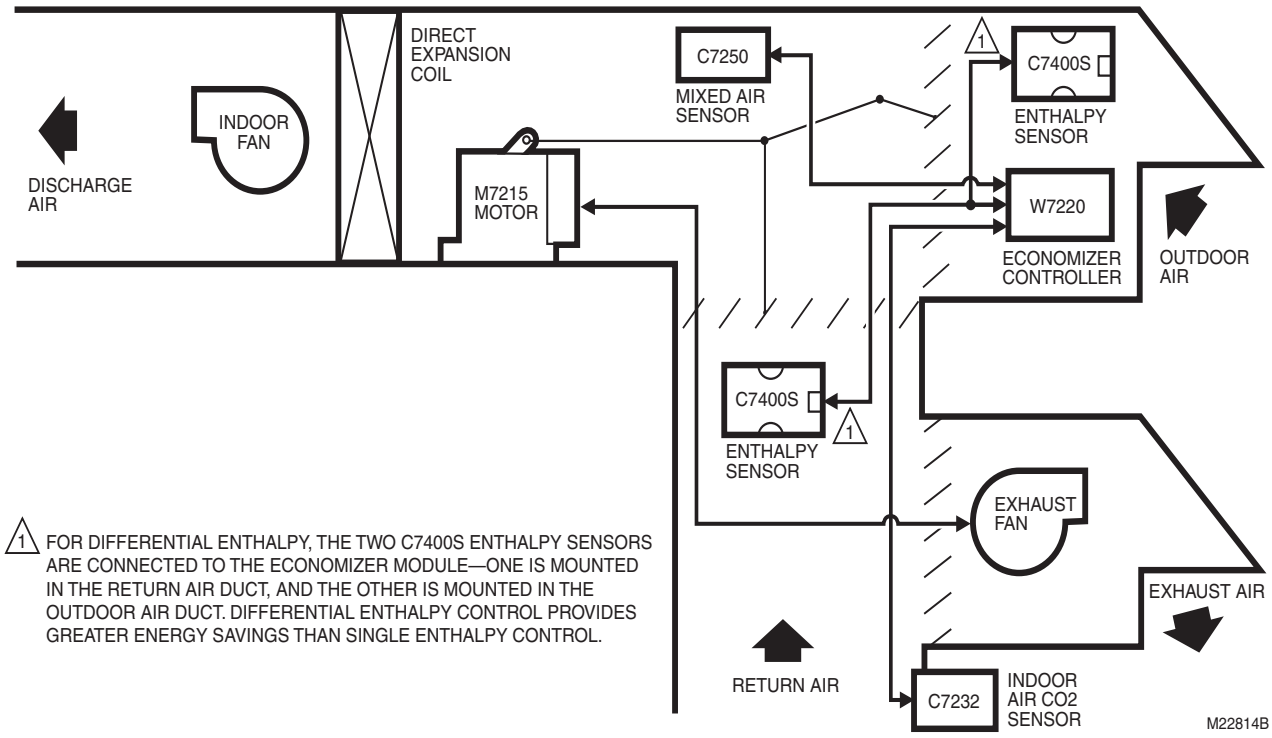

1 FOR DIFFERENTIAL ENTHALPY, THE TWO C7400S ENTHALPY SENSORS ARE CONNECTED TO THE ECONOMIZER MODULE—ONE IS MOUNTED IN THE RETURN AIR DUCT, AND THE OTHER IS MOUNTED IN THE OUTDOOR AIR DUCT. DIFFERENTIAL ENTHALPY CONTROL PROVIDES GREATER ENERGY SAVINGS THAN SINGLE ENTHALPY CONTROL.

Representative Locations of Connected W7220 Economizer System Devices

W7220 Components

The W7220 is a full function economizer used to provide a totally integrated control system.The JADE™ Economizer System is an expandable economizer control system, which includes a W7220 Economizer Module (controller) with an LCD and keypad. The W7220 can be configured with optional sensors.The W7220 Economizer Module can be used as a standalone economizer module wired directly to a commercial set back space thermostat and sensors to provide outdoor air dry-bulb economizer control.

The W7220 Economizer Module can be connected to optional Sylk Bus sensors for single or differential enthalpy control. The W7220 Economizer Module provides power and communications on the Sylk Bus for the Sylk Bus sensors.

The W7220 Economizer Module automatically detects sensors by polling the Sylk Bus to determine which sensors are present. If a sensor loses communications after it has been detected, the W7220 Economizer indicates a device fail error on its LCD.

System Components

The JADE™ Economizer System includes an Economizer Module, 20k mixed air sensor, damper actuator, an optional CO_2 sensor, and either a 20k outdoor air temperature sensor or Sylk Bus sensors for measuring Outdoor Air and return air enthalpy, temperature, and humidity.

Economizer Module

This is the core of the JADE™ Economizer System and includes the user interface for the system. The W7220 Economizer Module provides the basic inputs and outputs to provide simple economizer control. When used with the optional Sylk Bus sensors, the Economizer Module provides more advanced economizer functionality.

Sylk Bus Sensors (optional)

The Sylk Bus Sensor is a combination temperature and humidity sensor which is powered by and communicates on the Sylk Bus to the JADE™ economizer. Up to three sensors may be configured with the JADE™ Economizer Module.

CO_2 Sensor (optional)

A CO_2 sensor (non-communicating or non-Sylk Bus) can be added for Demand Control Ventilation (DCV).

JADE™ will be in the “set up” mode for the first 60 minutes after powered. If a sensor for OA air or Sylkbus device (sensor, actuator) is disconnected during the set up mode, the JADE™ will not alarm that failure. The MA sensor is a system “critical” sensor, if the MA sensor is removed during the set up mode, the JADE™ will alarm. After 60 minutes the JADE™ controller will change to operation mode and all components removed or failed will alarm in the operation mode.

Sensor Location and Mounting

The JADE™ Economizer W7220 uses digital sensors for control. The C7250 temperature sensors (MA[a] and OA[b]) are 20k NTC. A MA sensor is required for all applications and is mounted in the mixed air section of a rooftop unit either directly to the sheet metal using self tapping sheet metal screws or in the air stream using the duct mounting kit. Duct mount kit is part number 50053060-001. Optional OA, RA[c] and DA[d] Sylkbus sensors communicate withthe W7220 on the two-wire communication bus and can either be wired using a two pin header or using a side connector.

Each Sylkbus sensor includes a two pin side connector with the packaging. The SKU number of the Sylkbus sensor is C7400S. All OA, RA and DA sensors are the same SKU number. The sensor is set for the appropriate type of sensing using the three position DIP switch located on the sensor. OA position is OFF, OFF, OFF; RA is ON, OFF, OFF and DA is OFF, ON, OFF. During installation the sensors are set for the usage desired.

NOTE: The protective film on the dip switch is only necessary during the factory assembly process. Simply push through the film to set the dip switches; this will not harm the device.

Once installed, a sensor can be changed to a different application by simply changing the DIP switch setting.

[a] MA = Mixed Air

[b] OA = Outdoor Air

[c] RA = Return Air

[d] DA = Discharge Air

WIRING

Module wiring in the field is terminated to the four screw terminal blocks located on the left and right sides of the unit. Module wiring at the OEM factory is terminated via the header pin terminals located on the left and right sides. The header terminal pins and the terminal blocks have common terminations for the appropriate input or output.

Use Fig. 1 and Tables 1 and 2 to locate the wiring terminals for the economizer module.

NOTE: The four terminal blocks are removable. You can slide out each terminal block, wire it, and then slide it back into place.

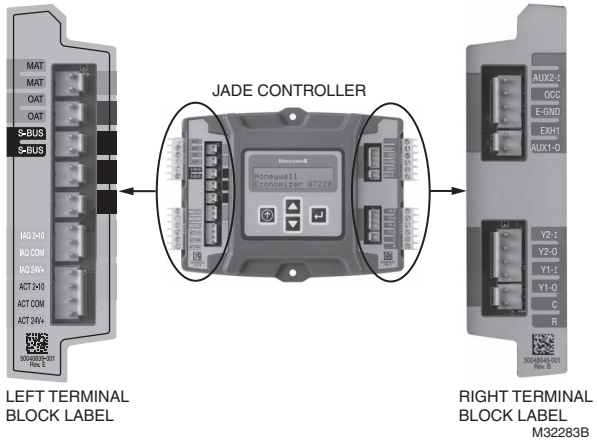

Fig. 1. W7220 Economizer module terminal connection labels.

Table 1. Economizer Module - Left hand terminal blocks.

Label	Type	Description
Top Left Terminal Block		
MAT MAT	20k NTC and COM	Mixed Air Temperature Sensor (polarity insensitive connection)
OAT OAT	20k NTC and COM	Outdoor Air Temperature Sensor (polarity insensitive connection)
S-BUS S-BUS	SYLK Bus	Sylk Bus sensor (polarity insensitive connection)
Bottom Left Terminal Block		
IAQ 2-10	2-10 Vdc	Air Quality Sensor Input (e.g. CO_2 sensor)
IAQ COM	COM	Air Quality Sensor Common
IAQ 24V	24 Vac	Air Quality Sensor 24 Vac Source
ACT 2-10	2-10 Vdc	Damper Actuator Output (2-10 Vdc)
ACT COM	COM	Damper Actuator Output Common
ACT 24V	24 Vac	Damper Actuator 24 Vac Source
	NA	The last terminal is not used

Table 2. Economizer Module - Right hand terminal blocks.

Label	Type	Description
Top Right Terminal Block		
	n/a	The first terminal is not used
AUX2 I	24 Vac IN	Shut Down (SD) or Heat (W) Conventional only or Heat Pump Change over (O/B) in Heat Pump mode.
OCC	24 Vac IN	Occupied / Unoccupied Input
E-GND	EGND	Earth Ground - System Required
EXH1	24 Vac OUT	Exhaust Fan 1 Output
AUX1 O	24 Vac OUT	Programmable: Exhaust fan 2 output or ERV or System Alarm output.
Bottom Right Terminal Block		
Y2-I	24 Vac IN	Y2 in - Cooling Stage 2 Input from space thermostat
Y2-O	24 Vac OUT	Y2 out - Cooling Stage 2 Output to stage 2 mechanical cooling
Y1-I	24 Vac IN	Y1 in - Cooling Stage 1 Input from space thermostat
Y1-O	24 Vac OUT	Y1 out - Cooling Stage 1 Output to stage 1 mechanical cooling
C	COM	24 Vac Common
R	24 Vac	24 Vac Power (Hot)

Actuator Wiring Options:

1. The JADE™ economizer controller can only have one (1) communicating actuator connected to it.
2. Up to four (4) non-communicating and two (2) 2-position actuators (1 each on EXH1 and AUX1 O)
3. One (1) communicating and up to four (4) non-communicating and two (2) 2-position actuators (1 each on EXH1 and AUX1 O). When using a 2-position actuator on the AUX1 O, the AUX1 O must be programmed for Exh2 and the % open is the % open of the outdoor damper when the 2-pos actuator opens. Connect 24 V to Exh1 and/or AUX1 O and ground to the JADE™ “C” terminal.

CO_2 Sensor Wiring

When using the C7232 Honeywell CO_2 sensors the black and brown common wires are internally connected and only one is connected to “IAQ COM” on the JADE™. Use the power from the JADE™ to power the CO_2 sensor OR make sure the ground for the power supplies are common. See wiring diagram below for the C7232 and C7632 wiring diagrams.

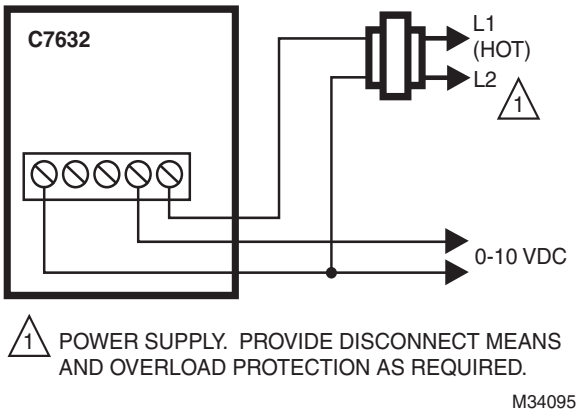

Fig. 2. Wiring for C7232

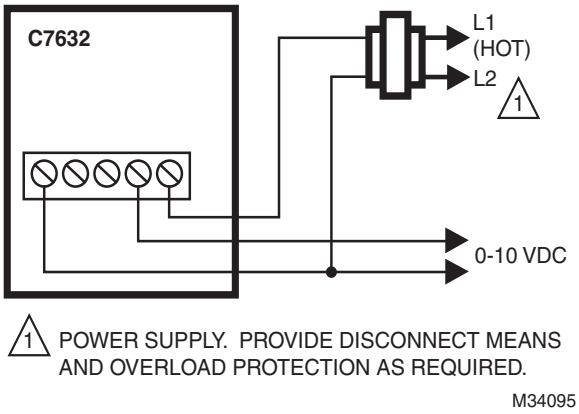

Fig. 3. Wiring for C7632

Wiring Application Examples

This section describes the wiring configurations for the JADE™ Economizer system. The configurations are:

—“Stand-alone Economizer”

—“Economizer with Sylk Bus Sensors” on page 116

Stand-alone Economizer

The most basic configuration is the stand-alone Economizer (see Fig. 4 and Fig. 6). A stand-alone Economizer is directly wired to sensors, actuators, thermostat, and mechanical controls in the roof top unit. It does not require Sylk Bus communications.

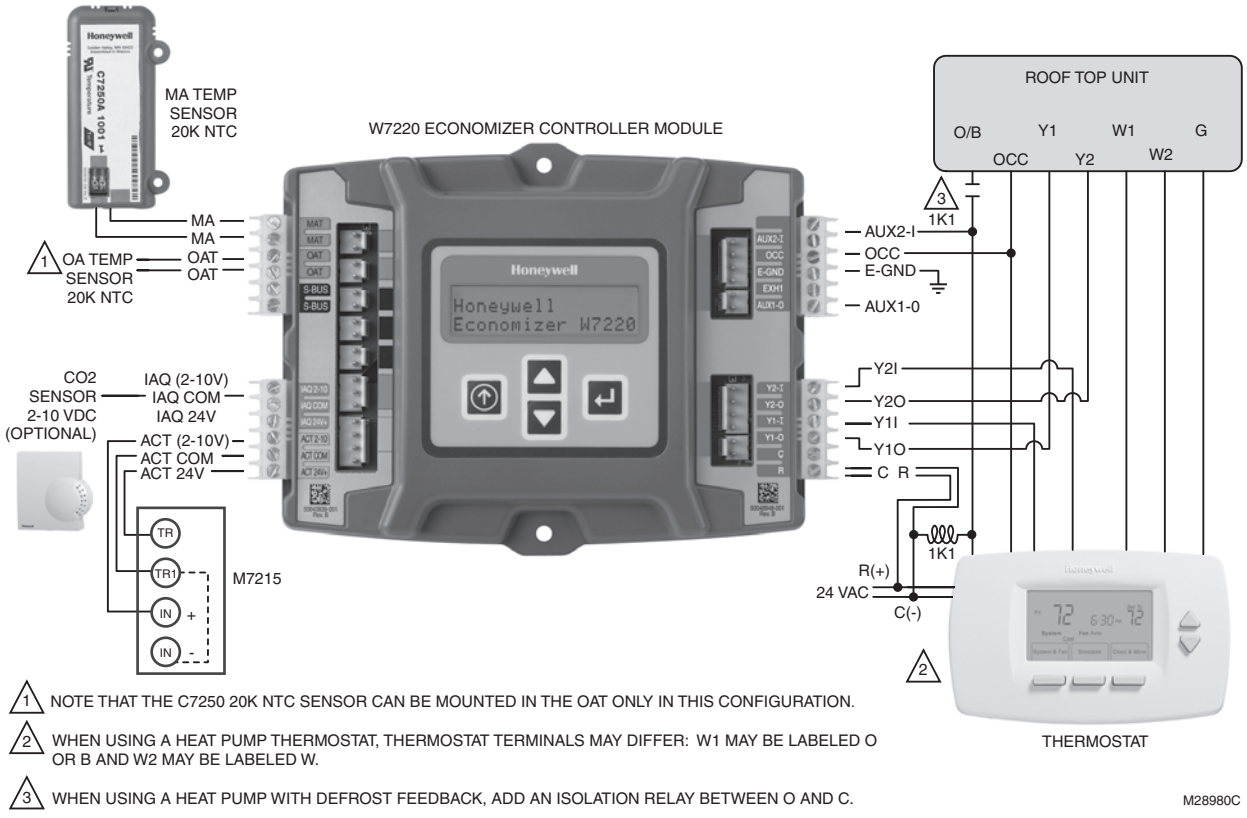

Fig. 4. Stand-alone dry bulb Economizer configuration with black motor M7215.

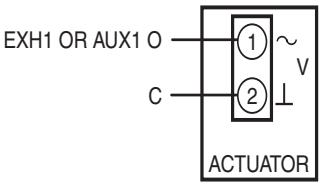

NOTE: ON/OFF ACTUATORS CAN BE USED ON THE EXH1 OR AUX1 O TERMINAL WITH GROUND TO THE C TERMINAL. WHEN PROGRAMMING THE EXH1 OR AUX1 O, THE % IS THE PERCENT OPEN POSITION OF THE OUTDOOR AIR DAMPER WHEN THE EXH1 OR AUX1 O TERMINAL IS ENERGIZED AND THE 2-POS DAMPER GOES OPEN. IF USING THE AUX1 O TERMINAL PROGRAM AUX1 O FOR EXH2.

M33409

Fig. 5. 2-position actuator.

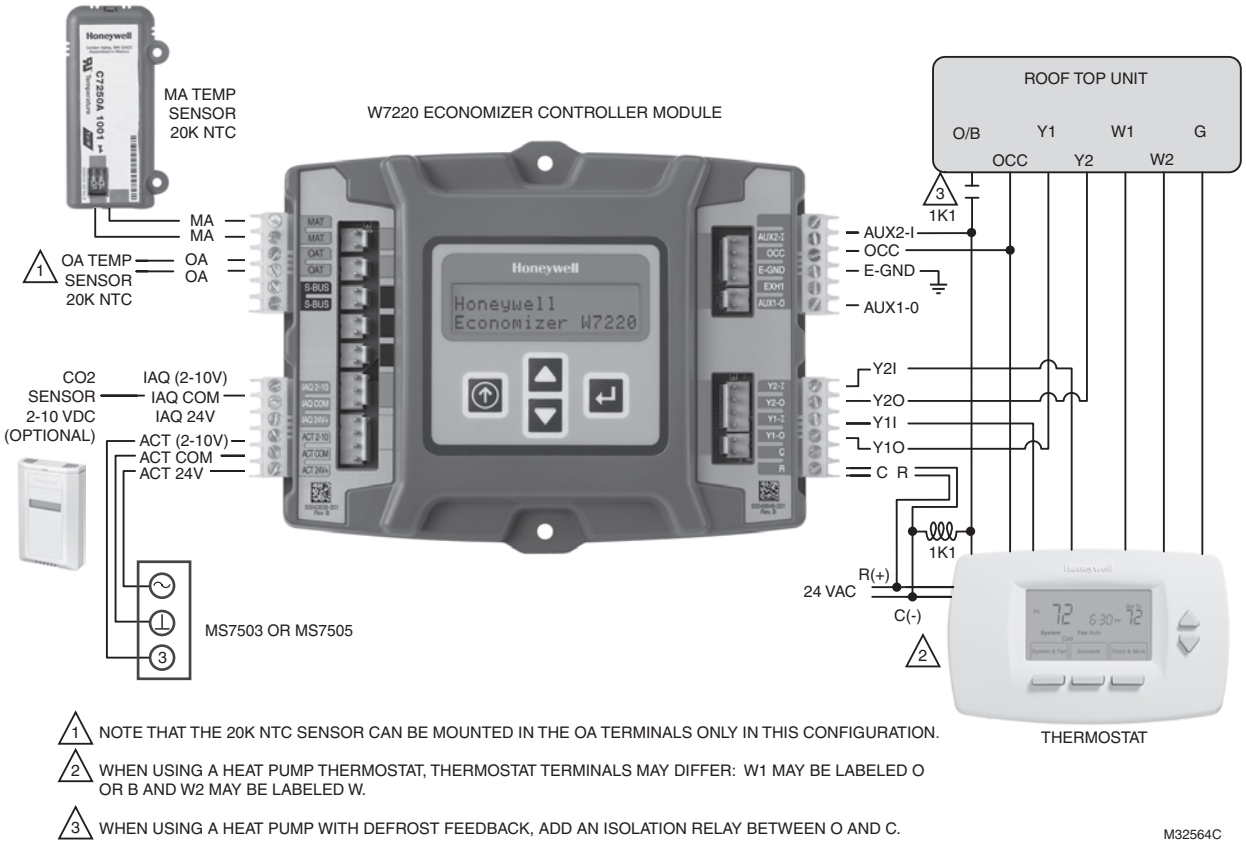

Fig. 6. Stand-alone dry-bulb Economizer configuration with Honeywell MS7503 or MS7505 Direct Coupled Actuator.

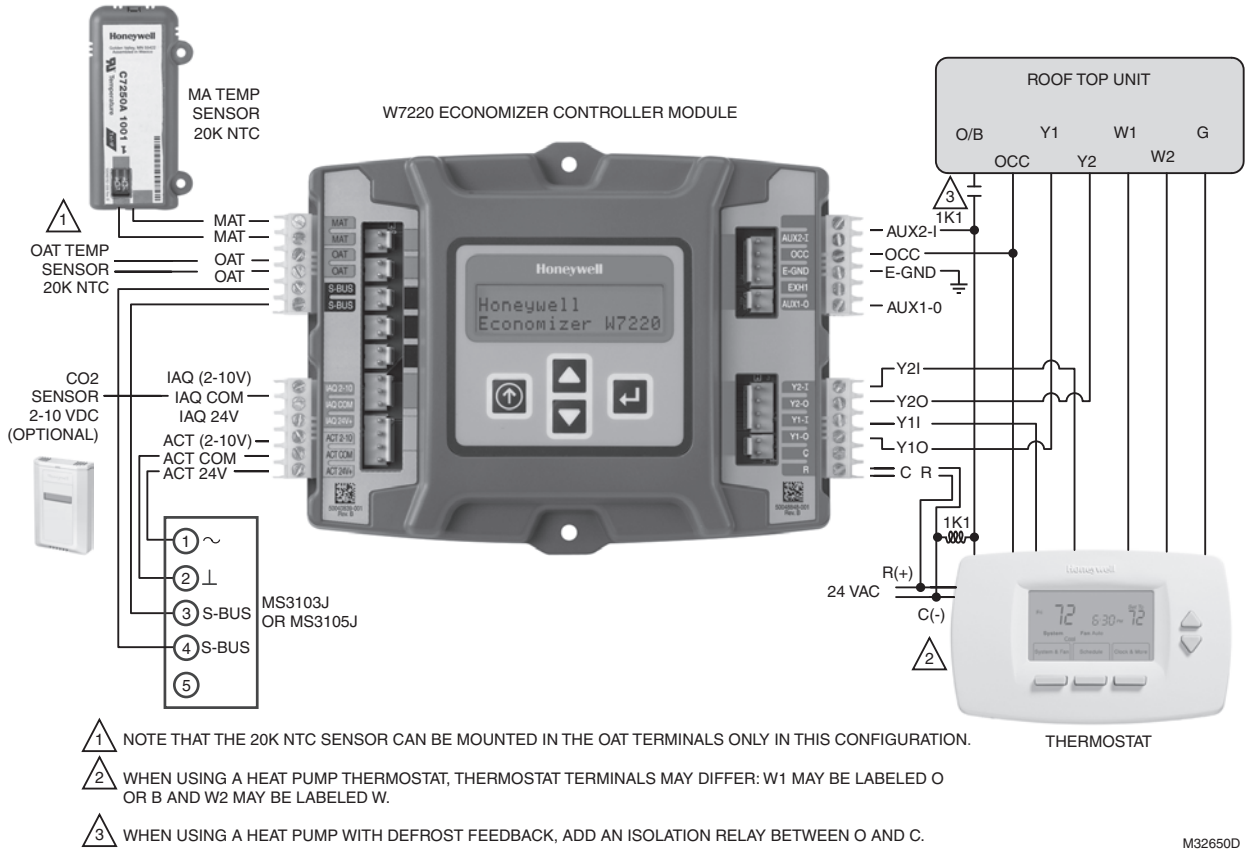

Fig. 7. Stand-alone dry-bulb Economizer configuration with Honeywell MS3103J or MS3105J communicating actuators.

Economizer with Sylk Bus Sensors

A standalone economizer with Sylk Bus sensors has additional sensors attached using Sylk Bus communications (see Fig. 8, Fig. 9 and Fig. 10). The Sylk Bus reduces wiring requirements while providing additional functionality.

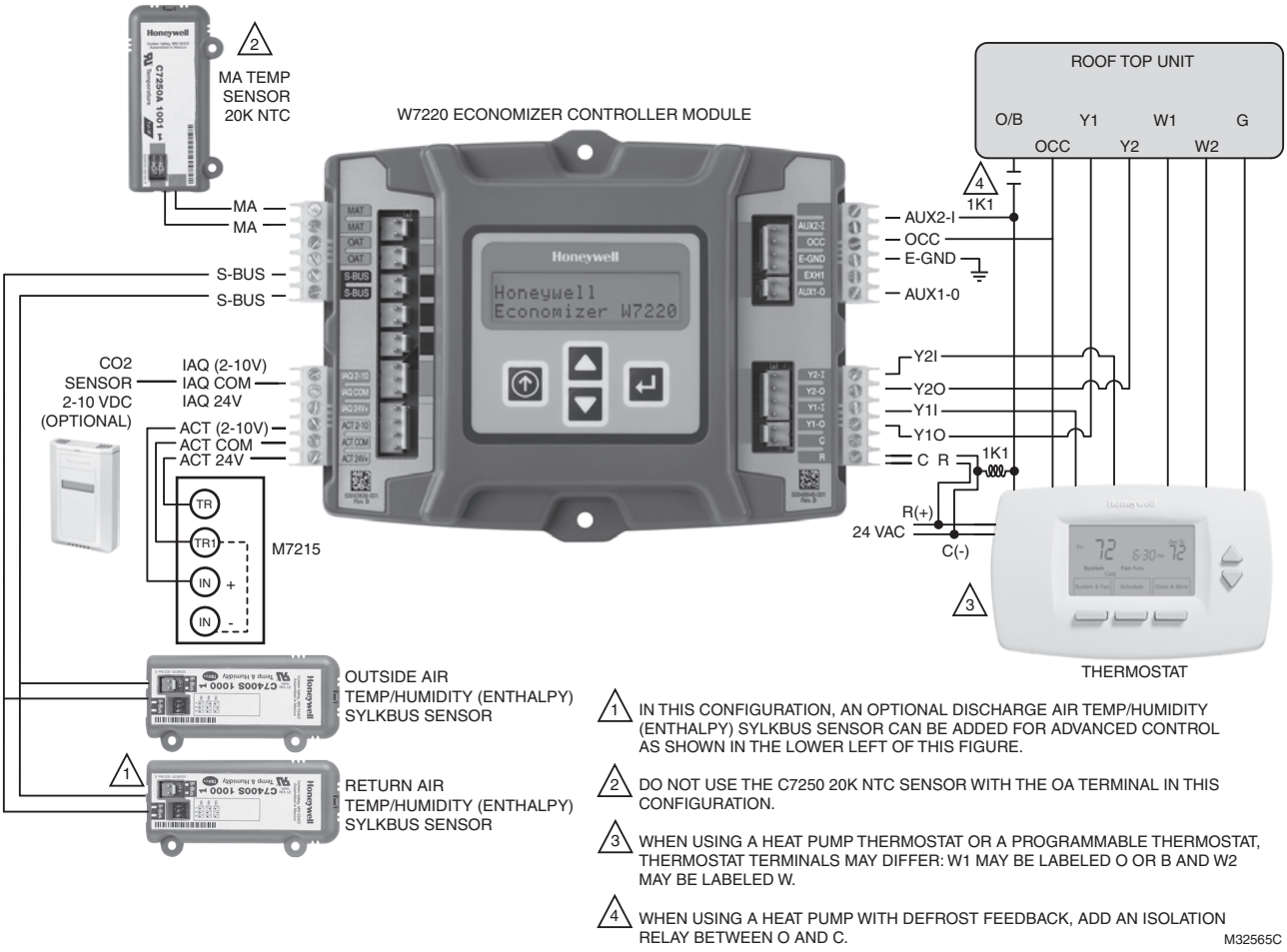

Fig. 8. Economizer with Sylk Bus sensors for enthalpy configuration with Honeywell M7215 black motor.

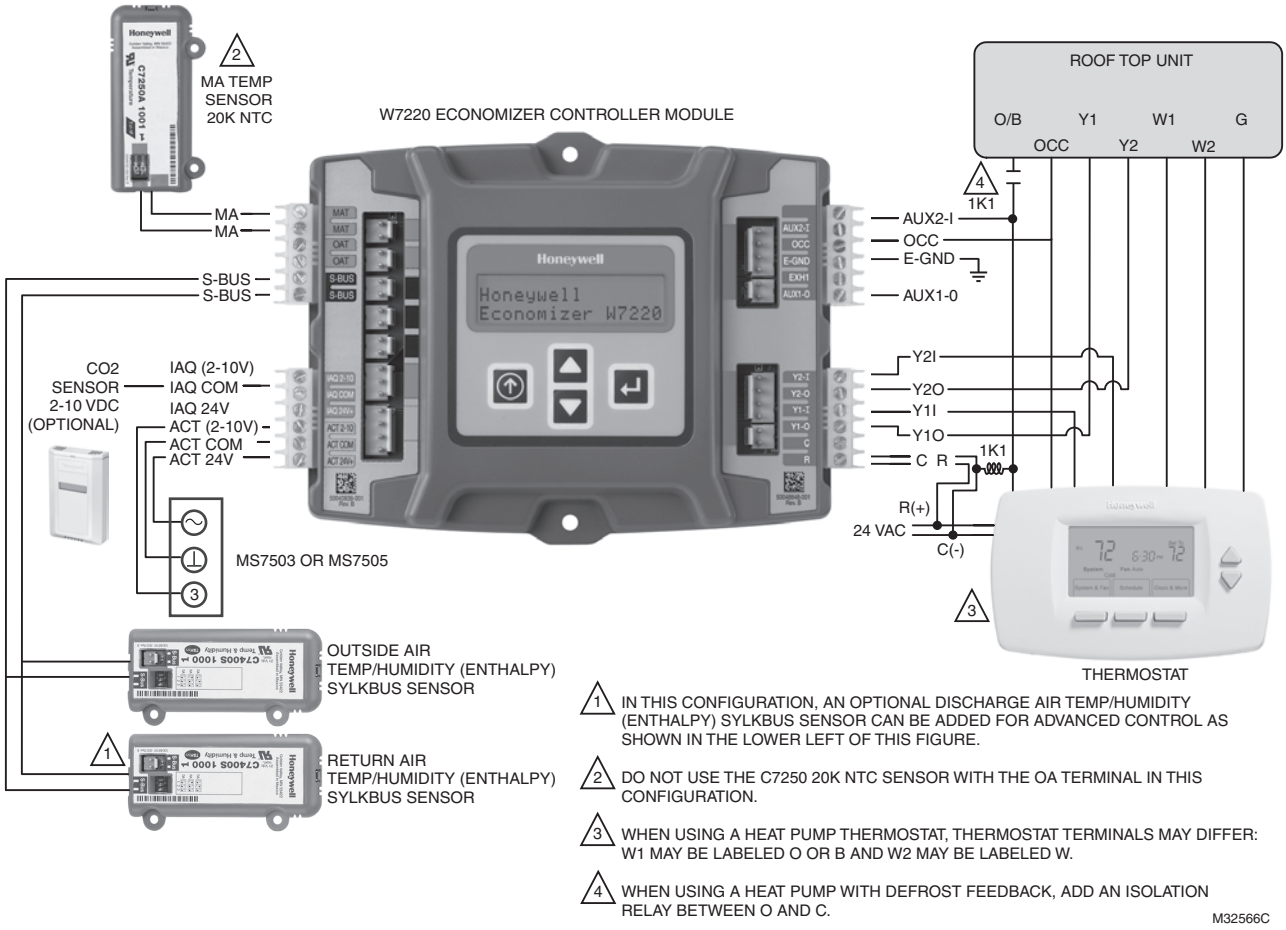

Fig. 9. Economizer with Sylk Bus sensors for enthalpy configuration with a Honeywell MS7503 or MS7505 Direct Coupled Actuator.

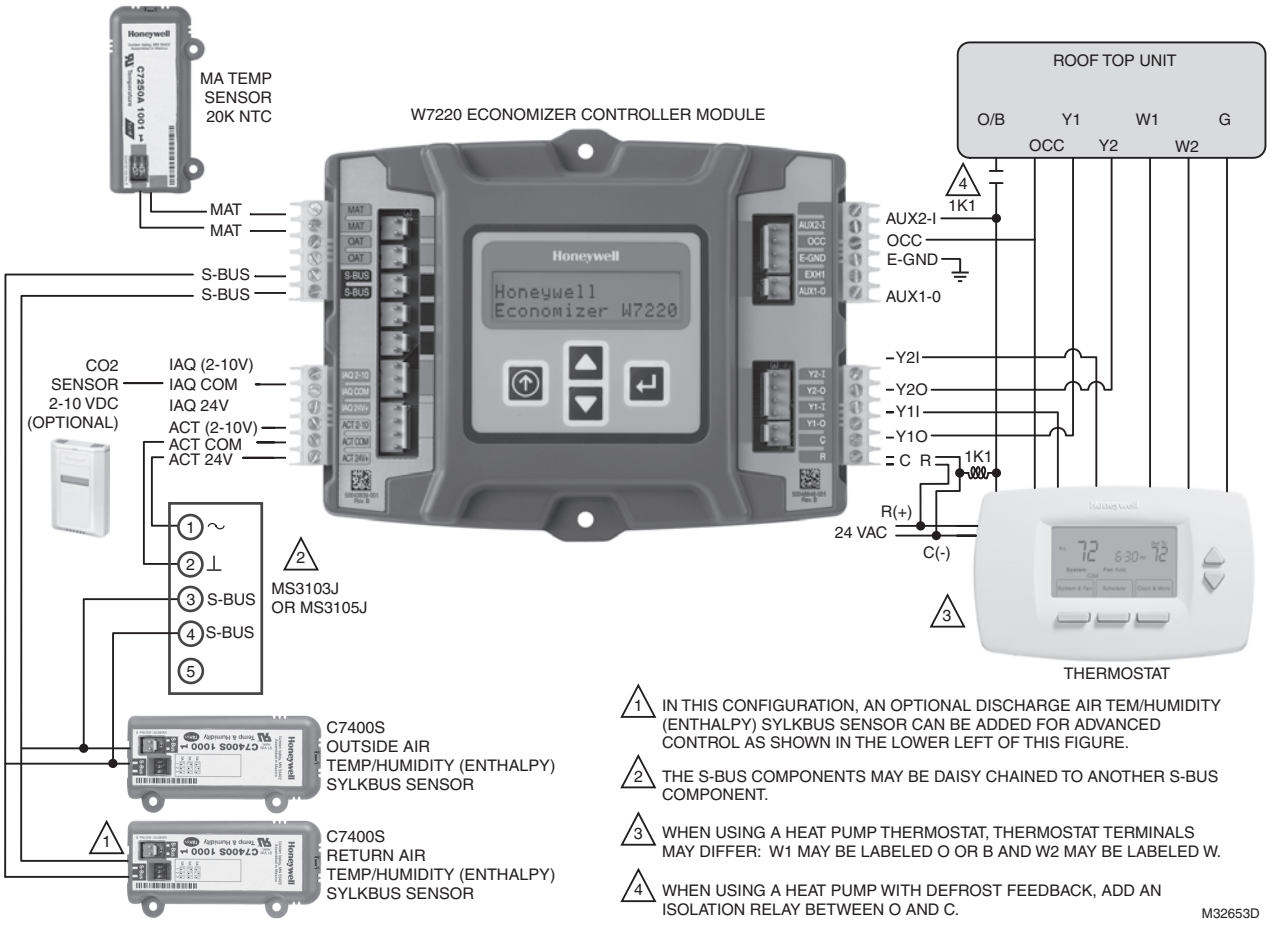

Fig. 10. Economizer with Sylk Bus sensors for enthalpy configuration with a Honeywell MS3103J or MS3105J communicating actuators.

User Interface

The user interface consists of an LCD display and a 4-button keypad on the front of the Economizer module. The LCD is a 16 character by 2 line dot matrix display.

Keypad

The four navigation buttons illustrated in Fig. 11 are used to scroll through the menus and menu items, select menu items, and to change parameter and configuration settings.

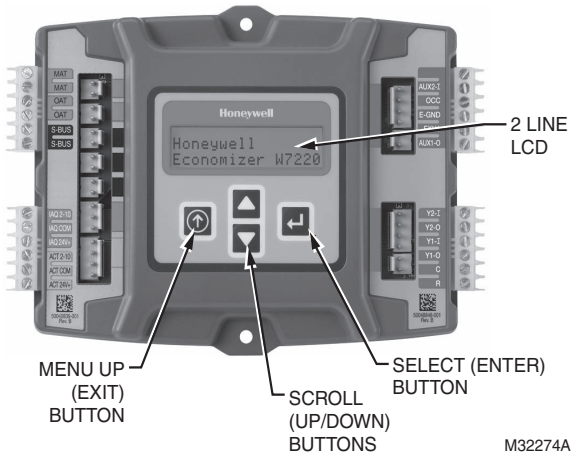

Fig. 11. Economizer LCD and Keypad Layout.

Using the Keypad with Menus

To use the keypad when working with menus:

- Press the ▲ button to move to the previous menu.
- Press the ▼ button to move to the next menu.
- Press the ↵ button (Enter) to display the first item in the currently displayed menu.
- Press the ⓘ button (Menu up) to exit a menu's item and return to the list of menus.

Menu Structure

Table 3 on page 121 illustrates the complete hierarchy of menus and parameters for the JADE™ Economizer system.

The Menus in display order are:

- STATUS
- SETPOINTS
- SYSTEM SETUP
- ADVANCED SETUP
- CHECKOUT
- ALARMS

Your menu parameters will be different depending on your configuration. For example, if you do not have a DCV (CO2) sensor, then none of the DCV parameters appear and only MIN POS will display. If you have a CO2 sensor, the DCV MIN and DCV MAX will appear AND if you have 2 speed fan DCV MIN (high and low speed) and DCV MAX (high and low speed will appear).

Table 3. Menu Structure

Menu	Parameter	Parameter Default Value	Parameter Range and Increments	Notes
STATUS	ECON AVAIL	NO	YES/NO	YES = economizing available; the system can use Outdoor Air for free cooling when required.
	ECONOMIZING	NO	YES/NO	YES = Outdoor Air being used for 1st stage cooling.
	OCCUPIED	NO	YES/NO	YES = OCC signal received from space thermostat or unitary controller. YES = 24 Vac on terminal OCC No = 0 Vac on terminal OCC.
	HEAT PUMP	n/ac	COOL HEAT	Displays COOL or HEAT when system is set to heat pump (nonconventional)
	COOL Y1-IN	OFF	ON/OFF	Y1-I signal from space thermostat or unitary controller for cooling stage 1. ON = 24 Vac on term Y1-I OFF = 0 Vac on term Y1-I
	COOL Y1-OUT	OFF	ON/OFF	Cool Stage 1 Relay Output to mechanical cooling (Y1-OUT terminal).
	COOL Y2-IN	OFF	ON/OFF	Y2-I signal from space thermostat or unitary controller for second stage cooling. ON = 24 Vac on term Y2-I OFF = 0 Vac on term Y2-I
	COOL Y2-OUT	OFF	ON/OFF	Cool Stage 2 Relay Output to mechanical cooling (Y2-OUT terminal).
	MA TEMP	_ _._ ºF	-40 to 150 ºF	Displays value of measured mixed air from MAT sensor. Displays --.- if not connected, short, or out-of-range. Always 3F above MA LO Setpoint.
	DA TEMP	_ _._ ºF	-40 to 150 ºF	Displays when Discharge Air Sylk Bus sensor is connected and displays measured discharge air temperature. Displays --.-°F if sensor sends invalid value, if not connected, short or out-of-range.
	OA TEMP	_ _._ ºF	-40 to 140 ºF	Displays measured value of outdoor air temperature. Displays --°F if sensor sends invalid value, if not connected, short or out-of-range.
	OA HUM	_ _ %	0 to 100%	Displays measured value of outdoor humidity from QA Sylkbus sensor. Displays --% if not connected, short, or out- of-range.
	RA TEMP	_ _._ ºF	0 to 140 ºF	Displays measured value of return air temperature from RAT sensor. Displays --°F if sensor sends invalid value, if not connected, short or out-of-range.
	RA HUM	_ _ %	0 to 100%	Displays measured value of return air humidity from RA Sylkbus sensor. Displays --% if sensor sends invalid value, if not connected, short or out-of-range.

Table 3. Menu Structure

Menu	Parameter	Param-eter Default Value	Parameter Range and increments	Notes
STATUS	IN CO2	_ _ _ ppm	0 to 2000 (3500) ppm	Displays value of measured CO2 from CO2 sensor. Invalid if not connected, short or out-of-range. May be adjusted in Advanced menu by Zero offset and Span
	DCV STATUS	n/a	ON/OFF	Displays ON if above setpoint and OFF if below setpoint, and ONLY if a CO2 sensor is connected.
	DAMPER OUT	2.0V	2.0 to 10.0 V	Displays output position to the damper actuator.
	ACT POS	n/a	0 to 100%	Displays actual position of actuator.
	ACT COUNT	n/a	1 to 65,535	Displays number of times actuator has cycled. 1 Cycle equals the sum of 180° of movement in any direction.
	ACTUATOR	n/a	OK/Alarm (on Alarm menu)	Displays Error if voltage or torque is below actuator range
	EXH1 OUT	OFF	ON/OFF	Output of EXH1 terminal. ON = 24 Vac Output; OFF = No Output.
	EXH2 OUT	OFF	ON/OFF	Output of AUX1 O terminal Displays ON when damper position reaches programmed percentage setpoint ON = 24 Vac Output, OFF = No Output; displays only if AUX1 O = EXH2
	ERV	OFF	ON/OFF	Output of AUX1 O terminal, ON = 24 Vac Output, OFF = No Output; displays only if AUX1 O = ERV
	MECH COOL ON	0	0, 1, or 2	Displays stage of mechanical cooling that is active.
	FAN SPEED	n/a	LOW or HIGH	Displays speed of fan on a 2-speed fan unit
	W (HEAT IN)	n/a	ON/OFF	Displays status of heat on a 2-speed fan unit.
SET-POINTS	MAT SET	53ºF	38 to 70 ºF; increment by 1	Setpoint determines where the economizer will modulate the OA damper to maintain the mixed air temperature.
	LOW T LOCK	32ºF	-45 to 80 ºF; increment by 1	Setpoint determines outdoor temperature when the mechanical cooling cannot be turned on. Commonly referred to as the Compressor lockout.
	DRYBLB SET	63ºF	48 to 80 ºF; increment by 1	Setpoint determines where the economizer will assume outdoor air temperature is good for free cooling; e.g.; at 63 ºF unit will economizer at 62 ºF and below and not economize at 64 ºF and above. There is a a 2 ºF deadband.

Table 3. Menu Structure (cont'd.)

Menu	Parameter	Parameter Default Value	Parameter Range and increments	Notes
SET-POINTS	ENTH CURVE	ES3	ES1, ES2, ES3, ES4, or ES5	Enthalpy boundary "curves" for economizing using single enthalpy. See "" on page 19 and Product Data sheet form 63-2700 for description of enthalpy curves.
	DCV SET	1100ppm	500 to 2000 ppm increment by 100	Displays ONLY if a CO2 sensor is connected. Setpoint for Demand Control Ventilation of space. Above the setpoint, the OA dampers will modulate open to bring in additional OA to maintain a space ppm level below the setpoint.
	MIN POS	2.8 V	2 to 10 Vdc	Displays ONLY if a CO2 sensor is NOT connected. With 2-speed fan units MIN POS L (low speed fan) and MIN POS H (high speed fan) settings are required. Default for MIN POS L is 3.2V and MIN POS H is 2.8V
	VENTMAX	2.8 V	2 to 10 Vdc or 100 to 9990 cfm increment by 10	Displays only if a CO2 sensor is connected. Used for Vbz (ventilation max cfm) setpoint. Displays 2 to 10 V if <3 sensors (RA,OA and MA). In AUTO mode dampers controlled by CFM With 2-speed fan units VENTMAX L (low speed fan) and VENTMAX H (high speed fan) settings are required. Default for VENTMAX L is 3.2V and VENTMAX H is 2.8V
	VENTMIN	2.25 V	2 to 10 Vdc or 100 to 9990 cfm increment by 10	Displays only if CO2 sensor is connected. Used for Va (ventilation min cfm) setpoint. Displays 2 to 10 V if <3 sensors (RA,OA and MA). Va is only set if DCV is used. This is the ventilation for less than maximum occupancy of the space. In AUTO mode dampers controlled by CFM With 2-speed fan units VENTMIN L (low speed fan) and VENTMIN H (high speed fan) settings are required. Default for VENTMIN L is 2.5V and VENTMIN H is 2.25V
	ERV OAT SP	32ºF	0 to 50 ºF; increment by 1	Only when AUX1 O = ERV
	EXH1 SET	50%	0 to 100%; increment by 1	Setpoint for OA damper position when exhaust fan 1 is powered by the economizer. With 2-speed fan units Exh1 L (low speed fan) and Exh1 H (high speed fan) settings are required. Default for Exh1 L is 65% and Exh1 H is 50%

Table 3. Menu Structure (cont'd.)

Menu	Parameter	Parameter Default Value	Parameter Range and Increments	Notes
SET-POINTS	EXH2 SET	75%	0 to 100%; increment by 1	Setpoint for OA damper position when exhaust fan 2 is powered by the economizer. Only used when AUX1 O is set to EHX2. With 2-speed fan units Exh2 L (low speed fan) and Exh2 H (high speed fan) settings are required. Default for Exh2 L is 80% and Exh2 H is 75%
SYSTEM SETUP	INSTALL	01/01/11		Display order = MM/DD/YY Setting order = DD, MM, then YY.
	UNITS DEG	ºF	ºF or ºC	Sets economizer controller in degrees Fahrenheit or Celsius.
	EQUIPMENT	CONV	CONV HP	CONV = conventional. HP O/B = Enables Heat Pump mode. Use AUX2 I for Heat Pump input from thermostat or controller.
	AUX2 I	n/a	Shutdown (SD) Heat (W1) HP(O) HP(B)	In CONV mode: SD = Enables configuration of shutdown (default); W = Informs controller that system is in heating mode. **NOTE: If using 2-speed fan mode, you must program CONV mode for W. Shutdown is not available in the two-speed fan mode.** In HP O/B mode: HP(O) = energize heat pump on Cool (default); HP(B) = energize heat pump on Heat.
	FAN SPEED	1 speed	1 speed/ 2 speed	Sets economizer controller for operation of 1 speed or 2 speed supply fan **NOTE: 2-speed fan option also needs Heat (W1) programmed in AUX 2 In.**
	FAN CFM	5000cfm	100 to 15000 cfm; increment by 100	This is the capacity of the RTU. The value is found on the label from the RTU manufacturer.
	AUX1 OUT	NONE	NONE ERV EXH2 SYS	• NONE = not configured (output is not used) • ERV= Energy Recovery Ventilatord • EXH2 = second damper position relay closure for second exhaust fan. • SYS = use output as an alarm signal
	OCC	INPUT	INPUT or ALWAYS	When using a setback thermostat with occupancy out (24 Vac), the 24 Vac is input "INPUT" to the OCC terminal. If no occupancy output from the thermostat then change program to "ALWAYS" OR ad a jumper from terminal R to OCC terminal.
	FACTORY DEFAULT	NO	NO or YES	Resets all set points to factory defaults when set to YES. LCD will briefly flash YES and change to NO but all parameters will change to factory default values.

Table 3. Menu Structure (cont'd.)

Menu	Parameter	Parameter Default Value	Parameter Range and Increments	Notes
ADVANCED SETUP	MA LO SET	45ºF	35 to 55 ºF; increment by 1º	Temp to activate Freeze Protection (close damper and alarm if temp falls below setup value). Always 3F below MA Setpoint.
	FREEZE POS	CLO	CLO MIN	Damper position when freeze protection is active (closed or MIN POS).
	CO2 ZERO	0ppm	0 to 500 ppm; increment by 10	CO2 ppm level to match CO2 sensor start level.
	CO2 SPAN	2000ppm	1000 to 3000 ppm; increment by 50	CO2 ppm span to match CO2 sensor.
	STG3 DLY	2.0h	0 min, 5 min, 15 min, then 15 min intervals. Up to 4h or OFF	Delay after stage 2 for cool has been active. Turns on 2nd stage of mechanical cooling when economizer is 1st stage and mechanical cooling is 2nd stage. Allows three stages of cooling, 1 economizer and 2 mechanical. OFF = no Stage 3 cooling.
	SD DMPR POS	CLO	CLO OPN	Indicates shutdown signal from space thermostat or unitary controller. When controller receives 24 Vac input on the SD terminal in conventional mode, the OA damper will open if programmed for OPN and OA damper will close if programmed for CLO. All other controls, e.g., fans, etc. will shut off.
	DCVCAL ENA	MAN	MAN (manual) AUTO	Turns on the DCV automatic control of the dampers. Resets ventilation based on the RA, OA and MA sensor conditions. Requires all sensors (RA, OA, MA and CO2). This operation is not operable with a 2-speed fan unit.
	MAT T CAL	0.0 F°	+/-2.5F°	Allows for the operator to adjust for an out of calibration temperature sensor
	OA T CAL	0.0F°	+/-2.5F°	Allows for the operator to adjust for an out of calibration temperature sensor
	OA H CAL	0% RH	+/-10% RH	Allows for the operator to adjust for an out of calibration humidity sensor
	RA T CAL	0.0F°	+/-2.5F°	Allows for the operator to adjust for an out of calibration temperature sensor
	RA H CAL	0% RH	+/-10% RH	Allows for the operator to adjust for an out of calibration humidity sensor
	DA T CAL	0.0 F°	+/-2.5F°	Allows for the operator to adjust for an out of calibration temperature sensor
	2SP FAN DELAY	5 Minutes	0 to 20 minutes in 1 minute increments	When in economizing mode this is the delay for the high speed fan to try to satisfy the call for second stage cooling before the first stage mechanical cooling is enabled.

Table 3. Menu Structure (cont'd.)

Menu	Parameter	Parameter Default Value	Parameter Range and Increments	Notes
CHECK-OUT	DAMPER VMIN-HS	n/a	n/a	Positions damper to VMIN position.
	DAMPER VMAX-HS (LS)	n/a	n/a	Positions damper to VMAX position. With 2-speed fan units the damper will position to VMAX low speed fan.
	DAMPER OPEN	n/a	n/a	Positions damper to the full open position. Exhaust fan contacts enable during the DAMPER OPEN test. Make sure you pause in this mode to allow for exhaust contacts to energize due to the delay in the system.
	DAMPER CLOSE	n/a	n/a	Positions damper to the fully closed position.
	CONNECT Y1-O	n/a	n/a	Closes the Y1-O relay (Y1-O). See CAUTION on page 24
	CONNECT Y2-O	n/a	n/a	Closes the Y2-O relay (Y2-O). See CAUTION on page 24
	CONNECT AUX1-O	n/a	n/a	Energizes the AUX1-O output. If AUX1-O setting is: • NONE – no action taken • ERV – 24 Vac out. Turns on or signals an ERV that the conditions are not good for economizing but are good for ERV operation.g • SYS – 24 Vac out. Issues a system alarm.
	CONNECT EXH1	n/a	n/a	Closes the power exhaust fan 1 relay (EXH1)
ALARMS	MA T SENS ERR	n/a	n/a	Alarms display only when they are active. The menu title "ALARMS (_)" includes the number of active alarms in parenthesis ().
	CO2 SENS ERR	n/a	n/a	
	OA T SENS ERR	n/a	n/a	
	DA ENTHL ERR	n/a	n/a	
	SYS ALARM	n/a	n/a	When AUX1-O is set to SYS and there is any alarm (e.g., failed sensors, etc.), the AUX1-O terminal has 24 Vac out.
	ACT UNDER V	n/a	n/a	Voltage received by Actuator is above expected range
	ACT OVER V	n/a	n/a	Voltage received by Actuator is below expected range
	ACT STALLED	n/a	n/a	Actuator stopped before achieving commanded position
	NOTE: The alarms listed are examples. Additional alarms display depending on the parameter settings and configuration.			

Time-out and Screensaver

When no buttons have been pressed for 10 minutes, the LCD displays a screen saver which cycles through the Status items. Each Status item displays in turn and cycles to the next item after 5 seconds.

Sequence of Operation

Table 4. Dry Bulb Operation No DCV (CO2 sensor) - 1 Speed Fan.

DCV	OA Good to economize?	Y1-I	Y2-I	FAN SPD	Y1-O	Y2-O	Occupied	Unoccupied
None	No	Off	Off	High	0-v/Off	0-v/Off	MIN POS	Closed
		On	Off	High	24-v/On	0-v/Off	MIN POS	Closed
		On	On	High	24-v/On	24-v/On	MIN POS	Closed
None	Yes	Off	Off	High	0-v/Off	0-v/Off	MIN POS	Closed
		On	Off	High	0-v/Off	0-v/Off	MIN POS to Full-Open	Closed to Full-Open
		On	On	High	24-v/On	0-v/Off[a]	MIN POS to Full-Open	Closed to Full-Open

[a] With stage 3 delay (STG3 DLY) in Advanced setup menu can turn on 2nd stage of mechanical cooling Y2 –O after the delay if the call for Y1-I and Y2-I have not been satisfied.

Table 5. Dry Bulb Operation With DCV (CO_2 sensor) - 1 Speed Fan.

DCV	OA Good to economize?	Y1-I	Y2-I	FAN SPD	Y1-O	Y2-O	Occupied	Unoccupied
Below CO2 set	No	Off	Off	High	0-v/Off	0-v/Off	VENTMIN	Closed
		On	Off	High	24-v/On	0-v/Off	VENTMIN	Closed
		On	On	High	24-v/On	24-v/On	VENTMIN	Closed
	Yes	Off	Off	High	0-v/Off	0-v/Off	VENTMIN	Closed
		On	Off	High	0-v/Off	0-v/Off	VENTMIN to Full-Open	Closed to Full-Open
		On	On	High	24-v/On	0-v/Off[a]	VENTMIN to Full-Open	Closed to Full-Open
Above CO2 set	No	Off	Off	High	0-v/Off	0-v/Off	VENTMIN to VENTMAX	Closed
		On	Off	High	24-v/On	0-v/Off	VENTMIN to VENTMAX	Closed
		On	On	High	24-v/On	24-v/On	VENTMIN to VENTMAX	Closed
	Yes	Off	Off	High	0-v/Off	0-v/Off	VENTMIN to VENTMAX	Closed
		On	Off	High	0-v/Off	0-v/Off	VENTMIN to Full-Open	Closed to Full-Open
		On	On	High	24-v/On	0-v/Off[a]	VENTMIN to Full-Open	Closed to Full-Open

[a] With stage 3 delay (STG3 DLY) in Advanced setup menu can turn on 2nd stage of mechanical cooling Y2 –O after the delay if the call for Y1-I and Y2-I have not been satisfied.

Table 6. Enthalpy Operation No DCV (CO_2 sensor) - 1 Speed Fan.

DCV	OA Good to economize?	Y1-I	Y2-I	FAN SPD	Y1-O	Y2-O	Occupied	Unoccupied
None	No	Off	Off	High	0-v/Off	0-v/Off	MIN POS	Closed
		On	Off	High	24-v/On	0-v/Off	MIN POS	Closed
		On	On	High	24-v/On	24-v/On	MIN POS	Closed
None	Yes	Off	Off	High	0-v/Off	0-v/Off	MIN POS	Closed
		On	Off	High	0-v/Off	0-v/Off	MIN POS to Full-Open	Closed to Full-Open
		On	On	High	24-v/On	0-v/Off[a]	MIN POS to Full-Open	Closed to Full-Open

[a] With stage 3 delay (STG3 DLY) in Advanced setup menu can turn on 2nd stage of mechanical cooling Y2 –O after the delay if the call for Y1-I and Y2-I have not been satisfied.

Table 7. Enthalpy Operation With DCV (CO_2 sensor) - 1 Speed Fan.

DCV	OA Good to economize?	Y1-I	Y2-I	FAN SPD	Y1-O	Y2-O	Occupied	Unoccupied
Below set	No	Off	Off	High	0-v/Off	0-v/Off	VENTMIN	Closed
		On	Off	High	24-v/On	0-v/Off	VENTMIN	Closed
		On	On	High	24-v/On	24-v/On	VENTMIN	Closed
	Yes	Off	Off	High	0-v/Off	0-v/Off	VENTMIN	Closed
		On	Off	High	0-v/Off	0-v/Off	VENTMIN to Full-Open	Closed to Full-Open
		On	On	High	24-v/On	0-v/Off[a]	VENTMIN to Full-Open	Closed to Full-Open
Above set	No	Off	Off	High	0-v/Off	0-v/Off	VENTMIN to VENTMAX	Closed
		On	Off	High	24-v/On	0-v/Off	VENTMIN L to VENTMAX	Closed
		On	On	High	24-v/On	24-v/On	VENTMIN H to VENTMAX	Closed
	Yes	Off	Off	High	0-v/Off	0-v/Off	VENTMIN L to VENTMAX	Closed
		On	Off	High	0-v/Off	0-v/Off	VENTMIN to Full-Open	Closed to Full-Open
		On	On	High	DELAY[b] 24-v/On	0-v/Off[a]	VENTMIN to Full-Open	Closed to Full-Open

[a] With stage 3 delay (STG3 DLY) in Advanced setup menu can turn on 2nd stage of mechanical cooling Y2 –O after the delay if the call for Y1-I and Y2-I have not been satisfied.

[b] With 2SP FAN DELAY (Advanced Setup Menu) when in the economizing mode there is a delay for the high speed fan to try to satisfy the call for second stage cooling by turning on the fan to high and opening the OA damper 100% before the first stage mechanical cooling is enabled.

Table 8. Dry Bulb Operation No DCV (CO_2 sensor) - 2 Speed Fan.

DCV	OA Good to economize?	Y1-I	Y2-I	FAN SPD	Y1-O	Y2-O	Occupied	Unoccupied
None	No	Off	Off	Low	0-v/Off	0-v/Off	MIN POS L	Closed
		On	Off	Low	24-v/On	0-v/Off	MIN POS L	Closed
		On	On	High	24-v/On	24-v/On	MIN POS H	Closed
None	Yes	Off	Off	Low	0-v/Off	0-v/Off	MIN POS L	Closed
		On	Off	Low	0-v/Off	0-v/Off	MIN POS L to Full-Open	Closed to Full-Open
		On	On	High	DELAY[b] 24-v/On	0-v/Off[a]	MIN POS H to Full-Open	Closed to Full-Open

[a] With stage 3 delay (STG3 DLY) in Advanced setup menu can turn on 2nd stage of mechanical cooling Y2 –O after the delay if the call for Y1-I and Y2-I have not been satisfied.

[b] With 2SP FAN DELAY (Advanced Setup Menu) when in the economizing mode there is a delay for the high speed fan to try to satisfy the call for second stage cooling by turning on the fan to high and opening the OA damper 100% before the first stage mechanical cooling is enabled.

Table 9. Dry Bulb Operation With DCV (CO_2 sensor) - 2 Speed Fan.

DCV	OA Good to economize?	Y1-I	Y2-I	FAN SPD	Y1-O	Y2-O	Occupied	Unoccupied
Below set	No	Off	Off	Low	0-v/Off	0-v/Off	VENTMIN L	Closed
		On	Off	Low	24-v/On	0-v/Off	VENTMIN L	Closed
		On	On	High	24-v/On	24-v/On	VENTMIN H	Closed
	Yes	Off	Off	Low	0-v/Off	0-v/Off	VENTMIN L	Closed
		On	Off	Low	0-v/Off	0-v/Off	VENTMIN L to Full-Open	Closed to Full-Open
		On	On	High	24-v/On	0-v/Off[a]	VENTMIN H to Full-Open	Closed to Full-Open
Above set	No	Off	Off	Low	0-v/Off	0-v/Off	VENTMIN L to VENTMAX	Closed
		On	Off	Low	24-v/On	0-v/Off	VENTMIN L to VENTMAX	Closed
		On	On	High	24-v/On	24-v/On	VENTMIN H to VENTMAX	Closed
	Yes	Off	Off	Low	0-v/Off	0-v/Off	VENTMIN L to VENTMAX	Closed
		On	Off	Low	0-v/Off	0-v/Off	VENTMIN L to Full-Open	Closed to Full-Open
		On	On	High	DELAY[b] 24-v/On	0-v/Off[a]	VENTMIN H to Full-Open	Closed to Full-Open

[a] With stage 3 delay (STG3 DLY) in Advanced setup menu can turn on 2nd stage of mechanical cooling Y2 –O after the delay if the call for Y1-I and Y2-I have not been satisfied.

[b] With 2SP FAN DELAY (Advanced Setup Menu) when in the economizing mode there is a delay for the high speed fan to try to satisfy the call for second stage cooling by turning on the fan to high and opening the OA damper 100% before the first stage mechanical cooling is enabled.

Table 10. Enthalpy Operation No DCV (CO_2 sensor) - 2 Speed Fan.

DCV	OA Good to economize?	Y1-I	Y2-I	FAN SPD	Y1-O	Y2-O	Occupied	Unoccupied
NO CO2 SENSOR	No	Off	Off	Low	0-v/Off	0-v/Off	MIN POS L	Closed
		On	Off	Low	24-v/On	0-v/Off	MIN POS L	Closed
		On	On	High	24-v/On	24-v/On	MIN POS H	Closed
	Yes	Off	Off	Low	0-v/Off	0-v/Off	MIN POS L	Closed
		On	Off	Low	0-v/Off	0-v/Off	MIN POS L to Full-Open	Closed to Full-Open
		On	On	High	DELAY[b] 24-v/On	0-v/Off[a]	MIN POS H to Full-Open	Closed to Full-Open

[a] With stage 3 delay (STG3 DLY) in Advanced setup menu can turn on 2nd stage of mechanical cooling Y2 –O after the delay if the call for Y1-I and Y2-I have not been satisfied.

[b] With 2SP FAN DELAY (Advanced Setup Menu) when in the economizing mode there is a delay for the high speed fan to try to satisfy the call for second stage cooling by turning on the fan to high and opening the OA damper 100% before the first stage mechanical cooling is enabled.

Table 11. Enthalpy Operation With DCV (CO_2 sensor) - 2 Speed Fan.

DCV	OA Good to economize?	Y1-I	Y2-I	FAN SPD	Y1-O	Y2-O	Occupied	Unoccupied
Below set	No	Off	Off	Low	0-v/Off	0-v/Off	VENTMIN L	Closed
		On	Off	Low	24-v/On	0-v/Off	VENTMIN L	Closed
		On	On	High	24-v/On	24-v/On	VENTMIN H	Closed
	Yes	Off	Off	Low	0-v/Off	0-v/Off	VENTMIN L	Closed
		On	Off	Low	0-v/Off	0-v/Off	VENTMIN L to Full-Open	Closed to Full-Open
		On	On	High	24-v/On	0-v/Off[a]	VENTMIN H to Full-Open	Closed to Full-Open
Above set	No	Off	Off	Low	0-v/Off	0-v/Off	VENTMIN L to VENTMAX	Closed
		On	Off	Low	24-v/On	0-v/Off	VENTMIN L to VENTMAX	Closed
		On	On	High	24-v/On	24-v/On	VENTMIN H to VENTMAX	Closed
	Yes	Off	Off	Low	0-v/Off	0-v/Off	VENTMIN L to VENTMAX	Closed
		On	Off	Low	0-v/Off	0-v/Off	VENTMIN L to Full-Open	Closed to Full-Open
		On	On	High	DELAY[b] 24-v/On	0-v/Off[a]	VENTMIN H to Full-Open	Closed to Full-Open

[a] With stage 3 delay (STG3 DLY) in Advanced setup menu can turn on 2nd stage of mechanical cooling Y2 –O after the delay if the call for Y1-I and Y2-I have not been satisfied.

[b] With 2SP FAN DELAY (Advanced Setup Menu) when in the economizing mode there is a delay for the high speed fan to try to satisfy the call for second stage cooling by turning on the fan to high and opening the OA damper 100% before the first stage mechanical cooling is enabled.

JADE™ Enthalpy Changeover Boundaries

The W7220 JADE™ economizer has new single enthalpy setpoints, it does not use the A,B,C,D and E enthalpy curves. Figure 13 and table 12 show the new boundary curves. There are 5 boundaries (setpoints ES1 through ES5), which are defined by dry bulb temperature, enthalpy and dew point.

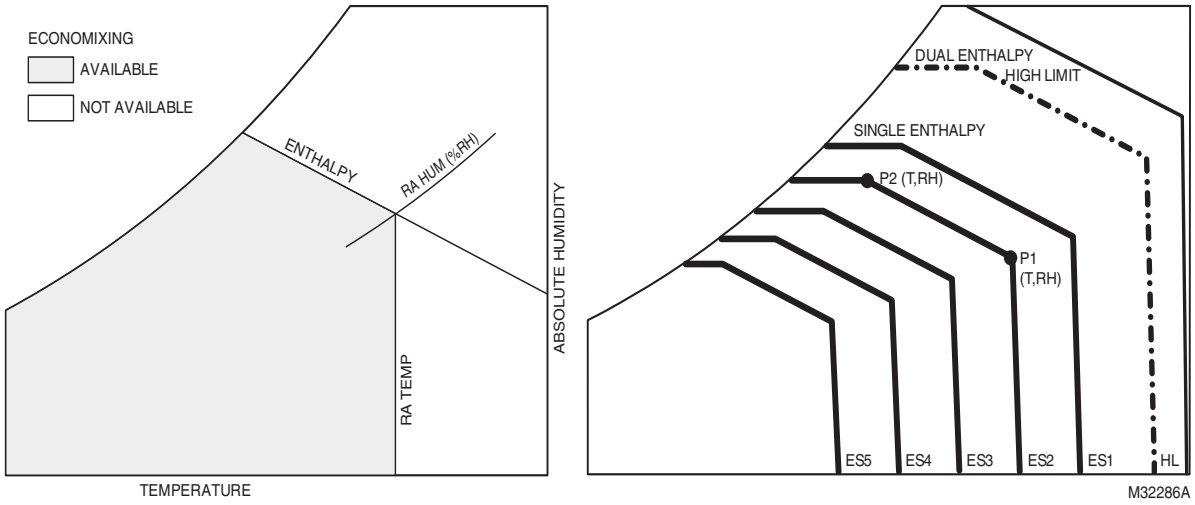

Fig. 12. Single Enthalpy curve and boundaries.

Table 12. Single Enthalpy and Dual Enthalpy High Limit Curves.

Enthalpy Curve	Temp. Dry-Bulb (°F)	Temp. Dew point (°F)	Enthalpy (btu/lb/da)	Point P1		Point P2	
				Temp. °F	Humidity %RH	Temp. °F	Humidity %RH
ES1	80.0	60.0	28.0	80.0	36.8	66.3	80.1
ES2	75.0	57.0	26.0	75.0	39.6	63.3	80.0
ES3	70.0	54.0	24.0	70.0	42.3	59.7	81.4
ES4	65.0	51.0	22.0	65.0	44.8	55.7	84.2
ES5	60.0	48.0	20.0	60.0	46.9	51.3	88.5
HL	86.0	66.0	32.4	86.0	38.9	72.4	80.3

Two-Speed Fan Operation

The later versions of the W7220 JADE™ controller have the capability to work with a system using a 2-speed supply fan operated by a 2-speed motor. The W7220 does not control the supply directly but uses the following input status to determine the speed of the supply fan and controls the OA damper to the required position.

The W (heating mode) is not controlled by the W7220 but it requires the status to know where to position the OA for minimum position for the fan speed.

The 2 speed fan delay is available when the system is programmed for 2 speed fan (in the System Setup menu item). The 2 speed fan delay is defaulted to 5 minutes and can be changed in the Advanced Setup menu item. When the unit has a call for Y1 In and in the free cooling mode and there is a call for Y2 In, the 2-speed fan delay starts and the OA damper will modulate 100% open, the supply fan should be set to high speed by the unit controller. After the delay one of two actions will happen:

- The Y2 In call will be satisfied with the damper 100% open and fan on high speed and the call will turn off

OR

- If the call for additional cooling in the space has not been satisfied then the first stage of mechanical damper cooling will be enabled through Y1 Out or Y2 Out.

Power Up Delay

Upon power up (or after a power outage or brownout), the W7220 controller module begins a 5 minute power up delay before enabling mechanical cooling.

Initial Menu Display

On initial start up, **Honeywell** displays on the first line and **Economizer W7220** on the second line. After a brief pause, the revision of the software appears on the first line and the second line will be blank.

Power Loss (Outage or Brownout)

All setpoints and advanced settings are restored after any power loss or interruption.

NOTE: If power goes below 18 Vac, the W7220 controller module assumes a power loss and the 5 minute power-up delay will become functional when power returns above 18 Vac.

Alarms

The Economizer module provides alarm messages that display on the 2-line LCD.

NOTE: Upon power up, the module waits 60 minutes before checking for alarms. This allows time for all the configured devices (e.g. sensors, actuator) to become operational. The exception is the MA sensor which will alarm immediately.

If one or more alarms are present and there has been no keypad activity for at least 5 minutes, the Alarms menu displays and cycles through the active alarms. You can also navigate to the Alarms menu at any time.

Clearing Alarms

Once the alarm has been identified and the cause has been removed (e.g. replaced faulty sensor), the alarm can be cleared from the display.

W7220 (JADE™) Economizer Controller Used with Honeywell Prestige© IAQ 2.0 Thermostat

The JADE™ controller is a digital unit with economizing, demand control ventilation, and auto calibration strategies used to provide energy savings and comfort for the occupants of small commercial buildings.

JADE™ automatically recognizes the following components that are wired to it:

- Outdoor enthalpy or dry bulb
- CO2 for demand control ventilation
- Mixed air for supply air comfort control
- Actuators to control the dampers

After the first 60 minutes of power on, JADE™ will change from a “setup” mode to an “operation” mode and will control the ventilation and “free cooling” to the building.

Alarm Mode for Failed Components on the JADE™ economizer system

If a sensor or actuator fails to respond to JADE™ during the operation mode, the JADE™ controller has the ability to send a 24 Vac signal, communicating that there is an alarm in the system. This is accomplished by programming the AUX1 O (out) terminal to “SYS” in the System Setup Menu on the JADE™ controller.

The building operator is able to address the alarm in three ways:

• Connect a light or audio alarm to the AUX1 O out to turn on a visual or audible alarm in the space, where a building operator will notice there is an alarm on the system

• Connect JADE™ to a W7220-PCMOD tool in the mechanical room, using the two-wire communication terminals (s-bus) and a personal computer to monitor the system

• Use a Prestige© IAQ 2.0 thermostat to alarm the occupants that there is a system alarm

The options of connecting a visual or audio alarm to the SYS output when an alarm occurs would normally not be used in an occupied space; these types of alarm systems would be in a warehouse or computer lab.

Using the W7220-PCMOD tool to monitor the occupancy, damper position and status of the sensors in the system allows the building operator to keep a constant or periodic audit record of the economizer system. The PCMOD tool is connected to the JADE™ controller via two non-polarity wires and to a personal computer via USB cable to log the selected data.

A Prestige© IAQ 2.0 thermostat can be used in the system alone or in conjunction with the W7220- PCMOD tool, to alert building occupants when there is an alarm in the economizer system.

You will need the following components:

- W7220A1000 JADE™ Economizer (plus sensors and actuator(s)
- R8222N1011 DPDT Relay
- THX9421R5013 Prestige© IAQ 2.0 2-wire Thermostat
- THM5421R1013 Equipment Interface Module
- Prestige© IAQ 2.0 Thermostat and Equipment Interface Module can be purchased in a kit YTHX9421R5051

To program the Prestige© IAQ 2.0 thermostat for JADE™ controller alarms:

1. Power thermostat > press Menu > press Installer options > input password > press Create Setup > select options through set up step 6000.

NOTE: The password is the date code located on the back of the thermostat. The date code can also be found in Menu > Equipment Status.

2. At installer setup 6000 (Select the Dry Contacts in the System) > “Custom Alert”.

3. At Installer Setup 6170, select the terminals wired to the dry contact device (S1 or S2). Connect a Normally Open Relay Contact to the S1 or S2 terminals.

4. At Installer Setup 6180 (Custom Alert Dry Contact Setup) select “Normally Open.”

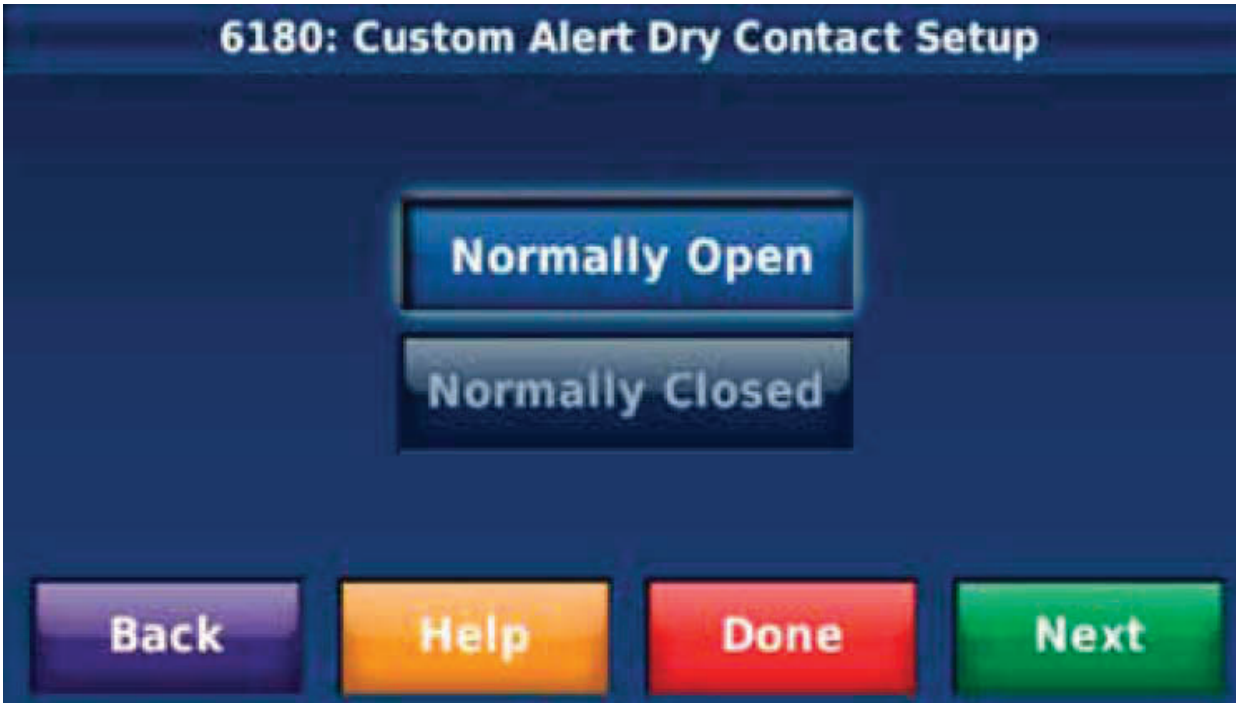

5. At Installer Setup 6190 (Customer Alert Name) > press to edit > type up to 40 characters. For example, “Economizer Alarm” (this will display on the thermostat home screen in an orange box when there is an alarm on the JADE™ controller).

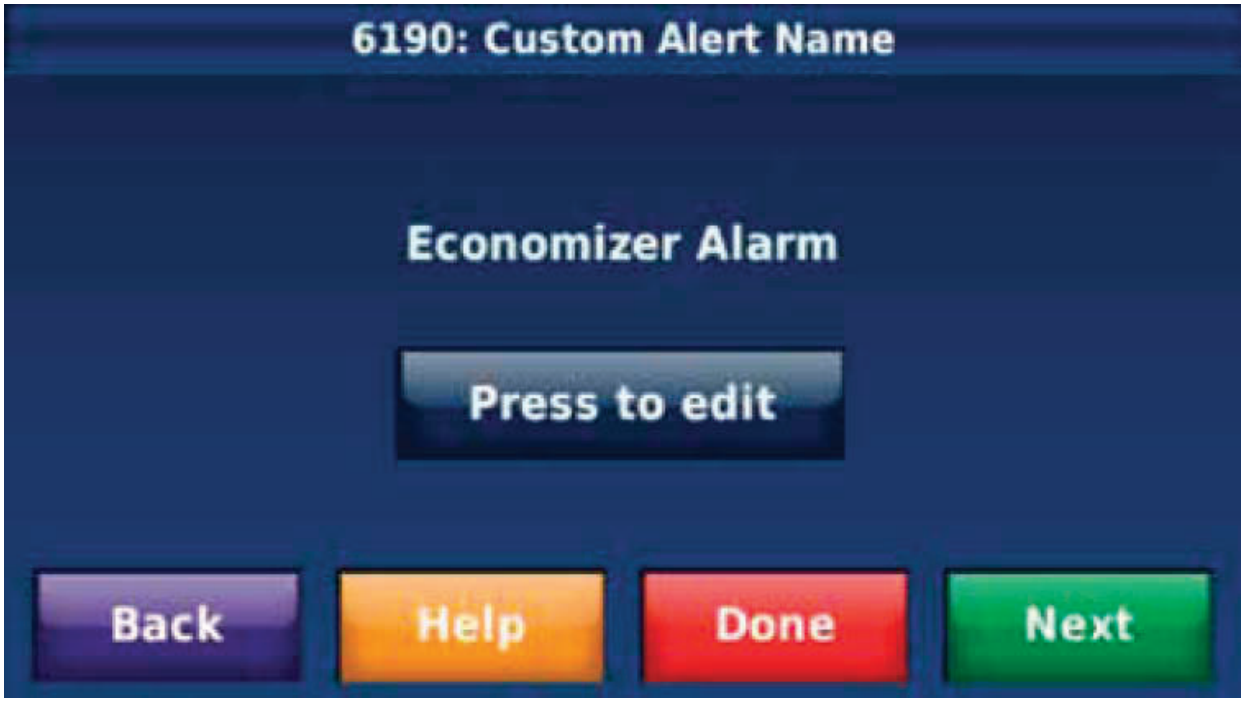

6. At Installer Setup 6200 (Customer Alert Message) > press to edit > type up to 140 characters. For example, “Call for Service 1-800-555-1212.”

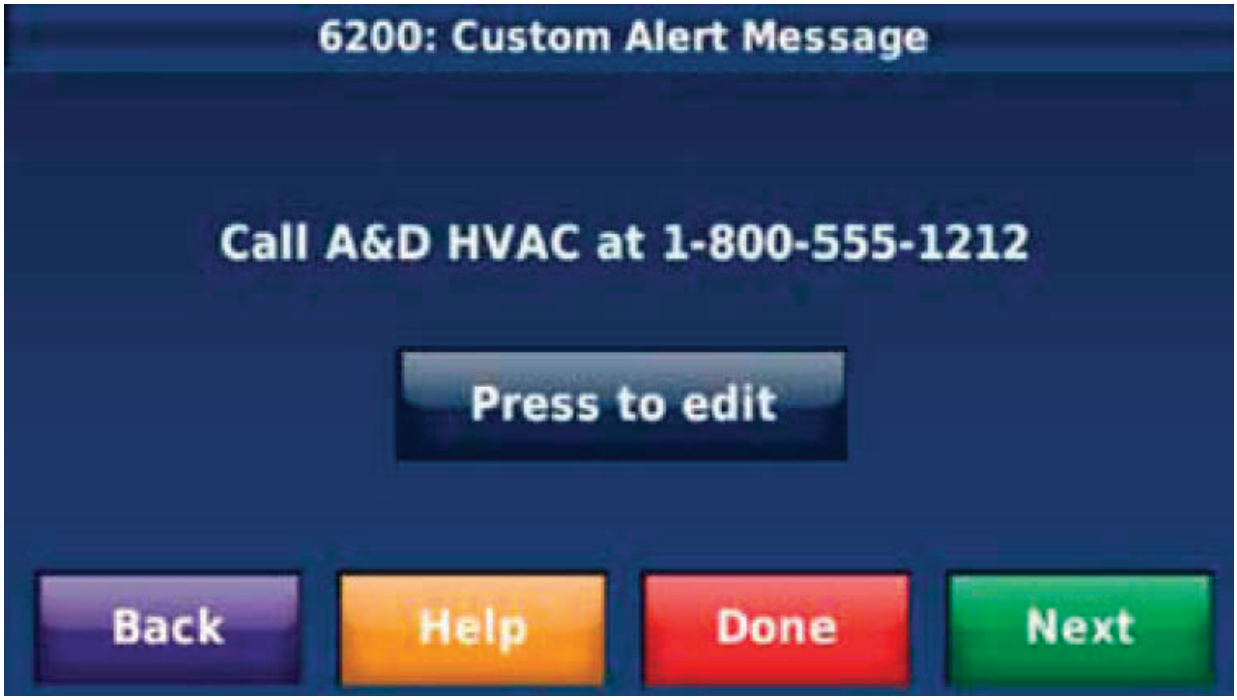

7. If the occupants clear the alert, the building operator can recover the last 25 alarms in the Alerts Log. The Alerts Log is located in the Menu > Installer Options > Data Logs > Alerts Log.

Prestige with EIM connected to a W7220 JADE™ Economizer

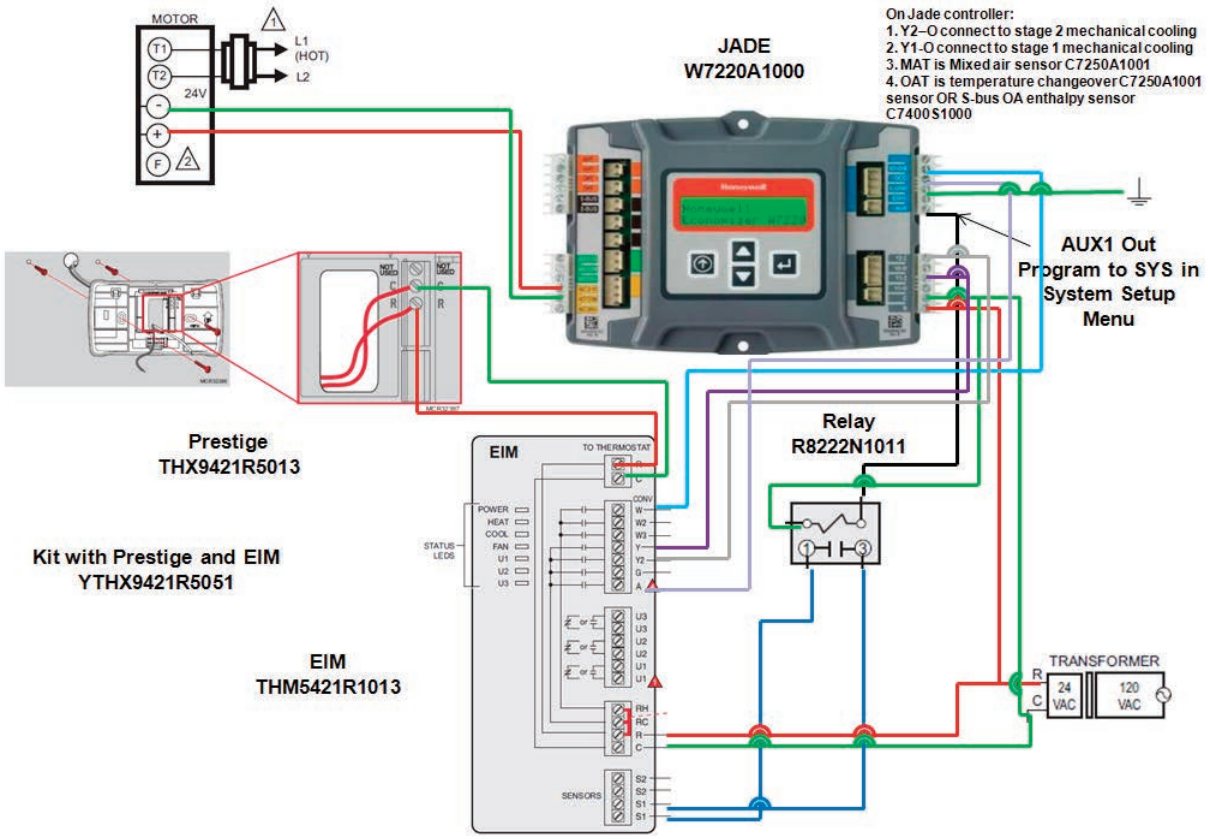

W7220 Personal Computer Tool

The W7220 JADE™ economizer controller is the first Honeywell standalone economizer that has a microprocessor and therefore makes it easy for the user to interact with the controller and provide information and new functions. However to make the controller a low cost for all users, the ability to record the history of the system was not included in the unit. A separate tool is available that allows the user to connect the W7220 JADE™ economizer to a personal computer to:

- reduce setup and test time by making it easy to program the controller using selectable program parameters for the unit
- record checkout of the economizer system
- provide the ability to monitor ventilation, economizer operation and other parameters for local building codes

To use the W7220 PC Module, you'll need:

a personal computer with the Windows XP Windows 7 or Windows Vista operating system; a USB cable to connect the PC Module to the computer; and two wires to connect the PC Module to the JADE™ controller module.

To connect the PC Module to the JADE™ controller, use a six-pin edge connector that inserts onto the edge of the PC MOD board from the side. Tie into Sylk –bus terminals on the JADE™ controller module system, and then connect the PC Module to the computer using the USB cable.

The PC MOD tool is powered through the Sylk-bus connection to the JADE™ controller. The complete OS number for the PC MOD tool is W7220-PCMOD and software to run it can be downloaded for free at: www.customer.honeywell.com/economizertools.

There are two versions of the software, one for the OEM factory and one for the contractors.

OEMs can use the PC MOD tool to load default programs for different customers to the JADE™ logic module without having the production workers push buttons and possibly misprogram the logic. They simply download the correct program from a file created by the production engineer. After the unit has been programmed, the operator is able to step through a checkout procedure to verify the unit is working and print a report to ship to the customer. The file can be saved for later use.

Each JADE™ logic module has a serial number which can be traced back to the factory to verify that it was working when it left the factory and to track the programmed parameters.

The contractor version of the software can be used in the field to communicate to the JADE's on the RTU without opening the unit by connecting 2 wires to the JADE™ via the S-bus and pulling the wires to a mechanical room where the 6-pin connector can be terminated to the wires. The service technician simply plugs the 6-pin connector into the PC tool, connects it to the computer and reads the status of the JADE™ in the RTU. The contractors may want to have one PC MOD tool per building, per RTU or per technician.

Extra 6-pin connectors are available in 20 per bag and can be ordered using the OS number 50048926-002.

Downloading the software:

1. Download PC tool software from www.customer.honeywell.com/economizertools to your personal computer.

NOTE: OEM and Field tools are the same hardware but use different programs and are used for different purposes. The password for the Field software is: password. For the OEM password call your Honeywell OEM representative.

a. During **initial** software installation make sure to check the box to create a desktop shortcut and check on "Install/Remove TUSB Drivers" on the installation screen.
b. If you are repeating installation of the software or not sure if the TUSB drivers are on the computer you are using, follow the steps in 4 below.
c. If you do not want to run the application immediately, unselect the "Run JADE™ Configuration tool" before clicking on FINISH.
d. After successfully downloading the software to your computer you will need to restart your computer. Close all programs and restart your computer.
e. For additional instructions contact your local distributor or the Honeywell hotline at 888-516-9347.

2. Connect W7220-PCMOD interface module to your computer using the USB cable provided.
3. Connect W7220-PCMOD tool to your S-Bus device using 2 non-polarity 18-22 gauge wires and power the Sylk device. Start configuration tool. If you get a message stating PC-tool cannot get firmware revision, then follow the steps in 4 below. The wires can be up to 100 feet without protection and up to 200 feet using twisted pair wire.
4. To verify the correct port on your computer:
   - Press the Windows key and the Pause key at the same time on your keyboard.
   - Click Device Manager that appears on the left side of the screen (if using Windows XP the System properties window will appear; click on hardware, then device manager).
   - Click Ports from Device window pop up.
   - Note the Com port assigned to TUSB3410. Close the Device Manager screen.
5. Go to configuration tool and choose the matching comport to TUSB3410 from the Settings menu.

For Specific instructions refer to the Honeywell E- learning module at: www.customer.honeywell.com

Running the Software

After installing PCMOD software to your desktop, double click on the JADE™ Trade configuration tool icon to open it. This is the first page you'll see. A small sub-screen will display basic information, including note on COM port settings.

Click on "OK."

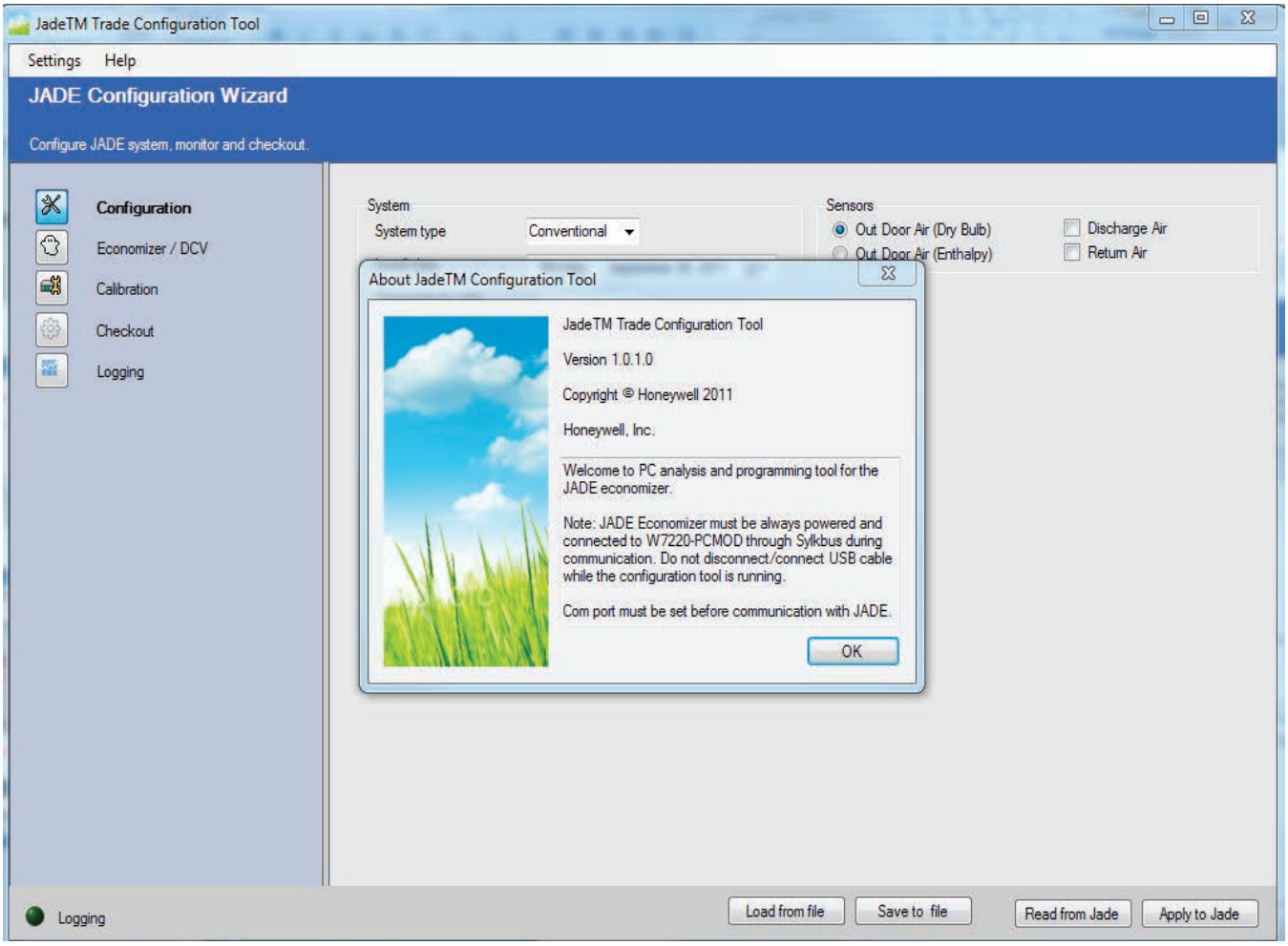

The configuration screen will appear with the system settings.

Before you proceed, check your COM Port.

Go into Settings in the header on the page and choose the port for your TUSB3410 COM Port, using the drop down menu.

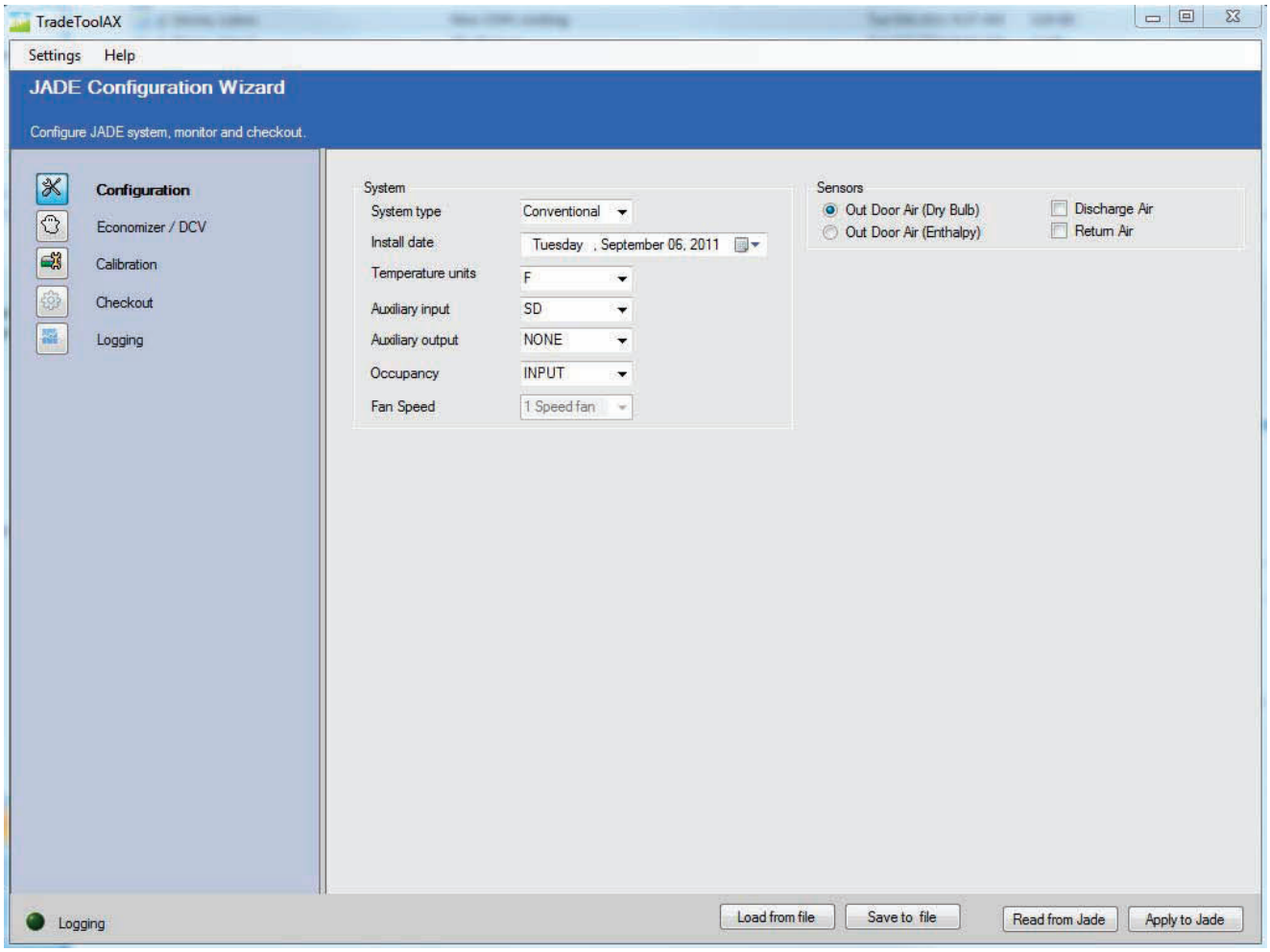

If you are not sure the com port on your computer you can check the com port by pressing the Window key and the Pause key at the same time on your keyboard.

With a laptop you may need to press and hold the Fn key, then press and hold the windows key and then press and hold the pause key.

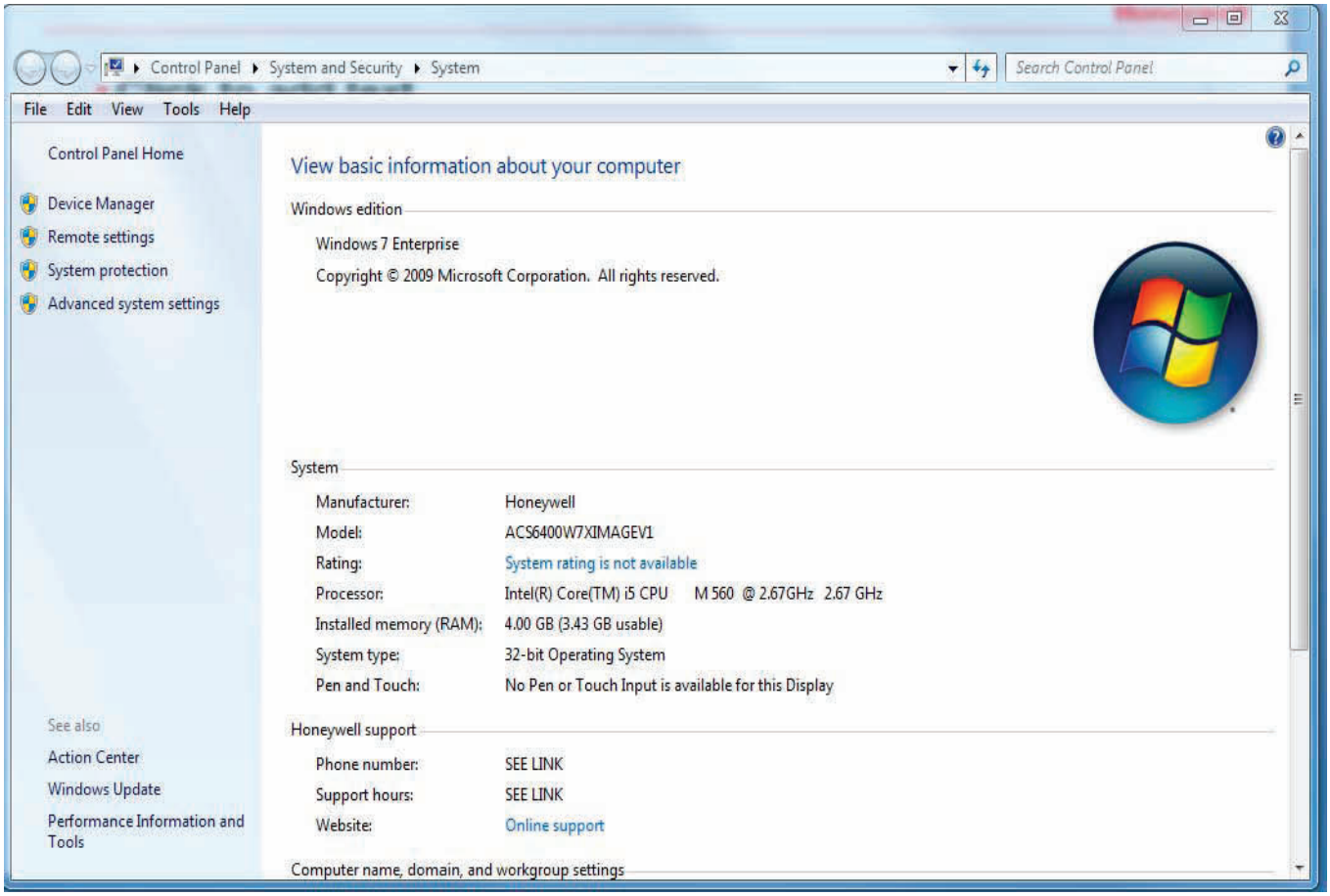

For Windows XP this screen will come up. Click on “Device Manager” in the left column.

For Windows XP this screen will come up. Click on Hardware and then click on Device manager.

Find the ports file and expand it. You'll see the list of various COM Port options. The one you are looking for is listed under TUSB3410 Device.

Note, in this case it is COM8.

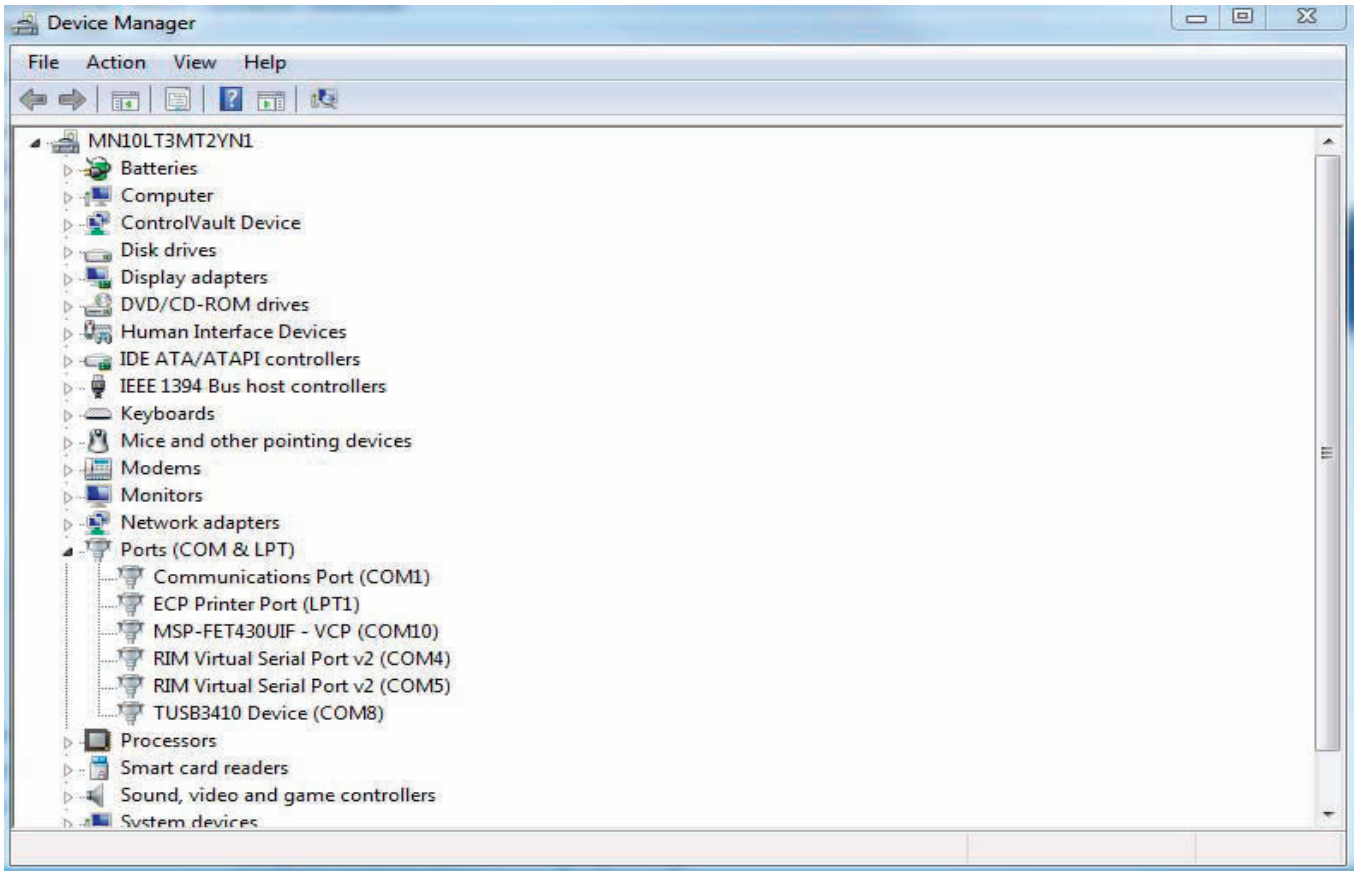

Close this file and go back to your PC Module tool program.

Now that you know the correct COM Port, click on the Settings drop down menu and choose the one that matches your device manager port for TUSB3410 Device.

If the port that the TUSB3410 file does not show up on your settings list for the port, close the file and reopen it. This means you opened the file before the P C Module was connected to your personal computer.

To the right of Setting there is Help menu button. The Help menu provides an explanation about each system configuration setting and provides the parameters and functions of specific set points.

The configuration screen allows you to choose your System configuration. Note these are the same configuration settings that are available using menus buttons in the JADE™ controller.

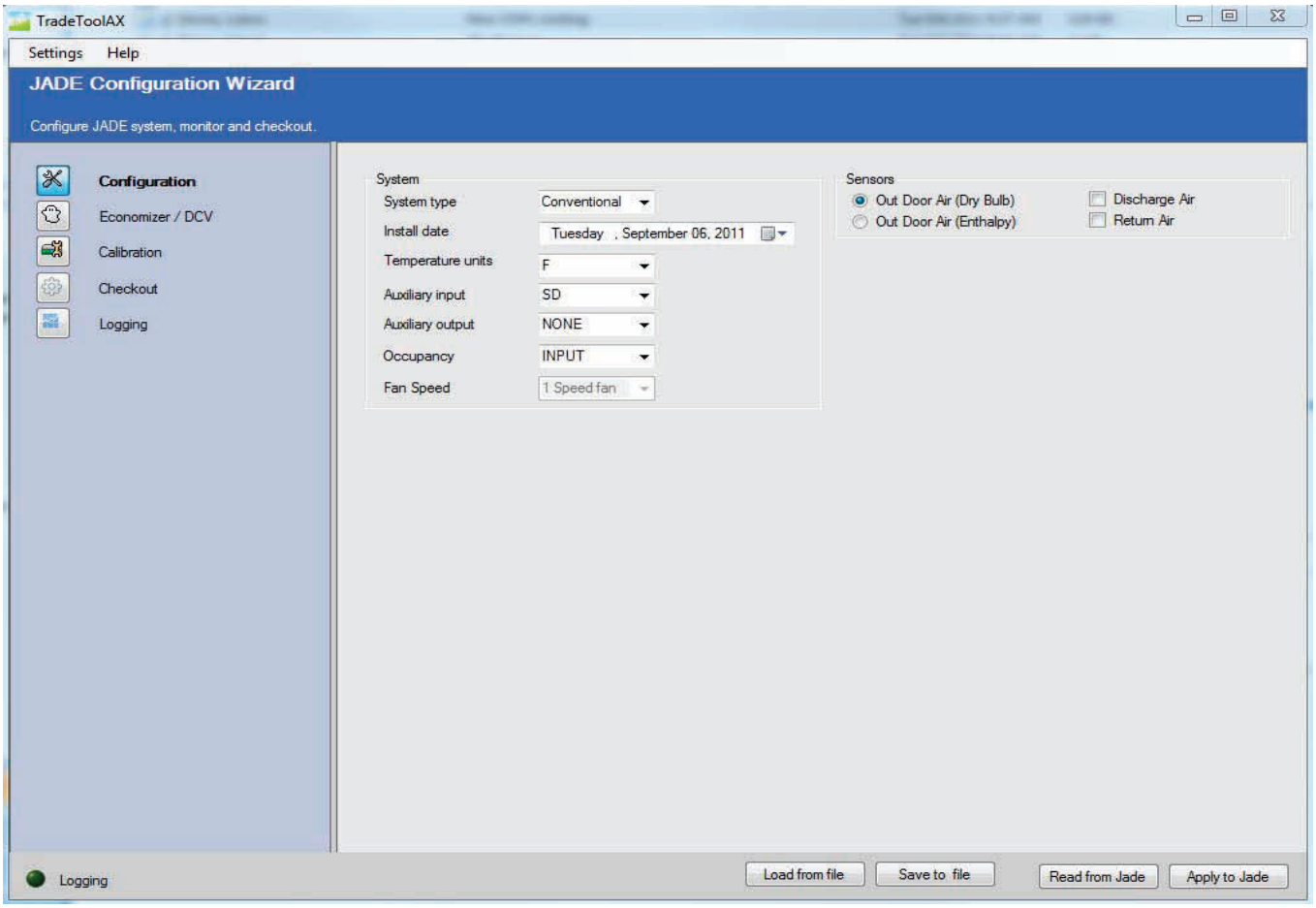

Under the Sensor options select sensor or sensors you are currently using in the system.

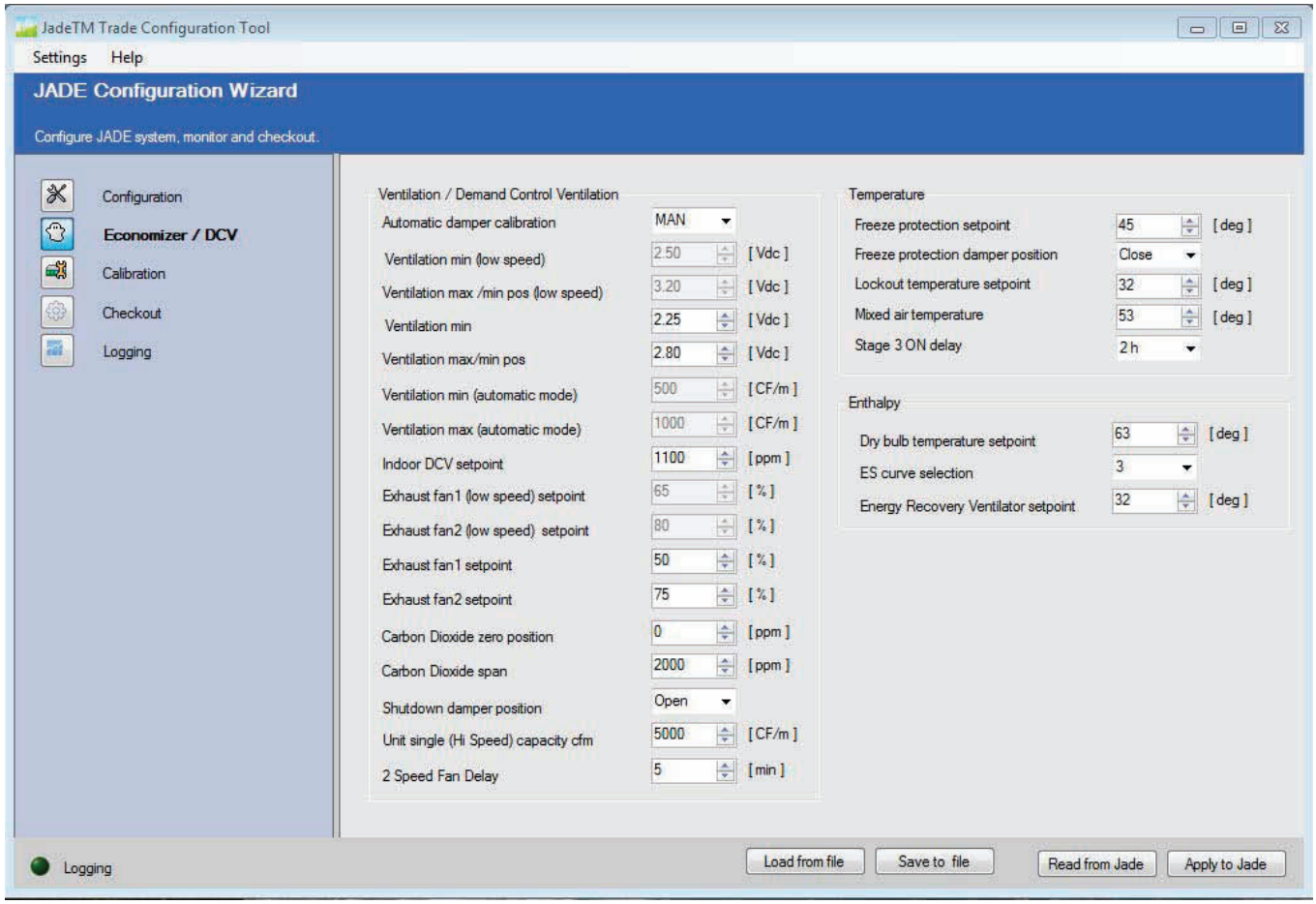

When you are complete with the configuration click on the next tab economizer/ DCV in the left column. Under Economizer/ DCV tab you can configure your Ventilation, Demand Control Ventilation, Temperature and Enthalpy settings.

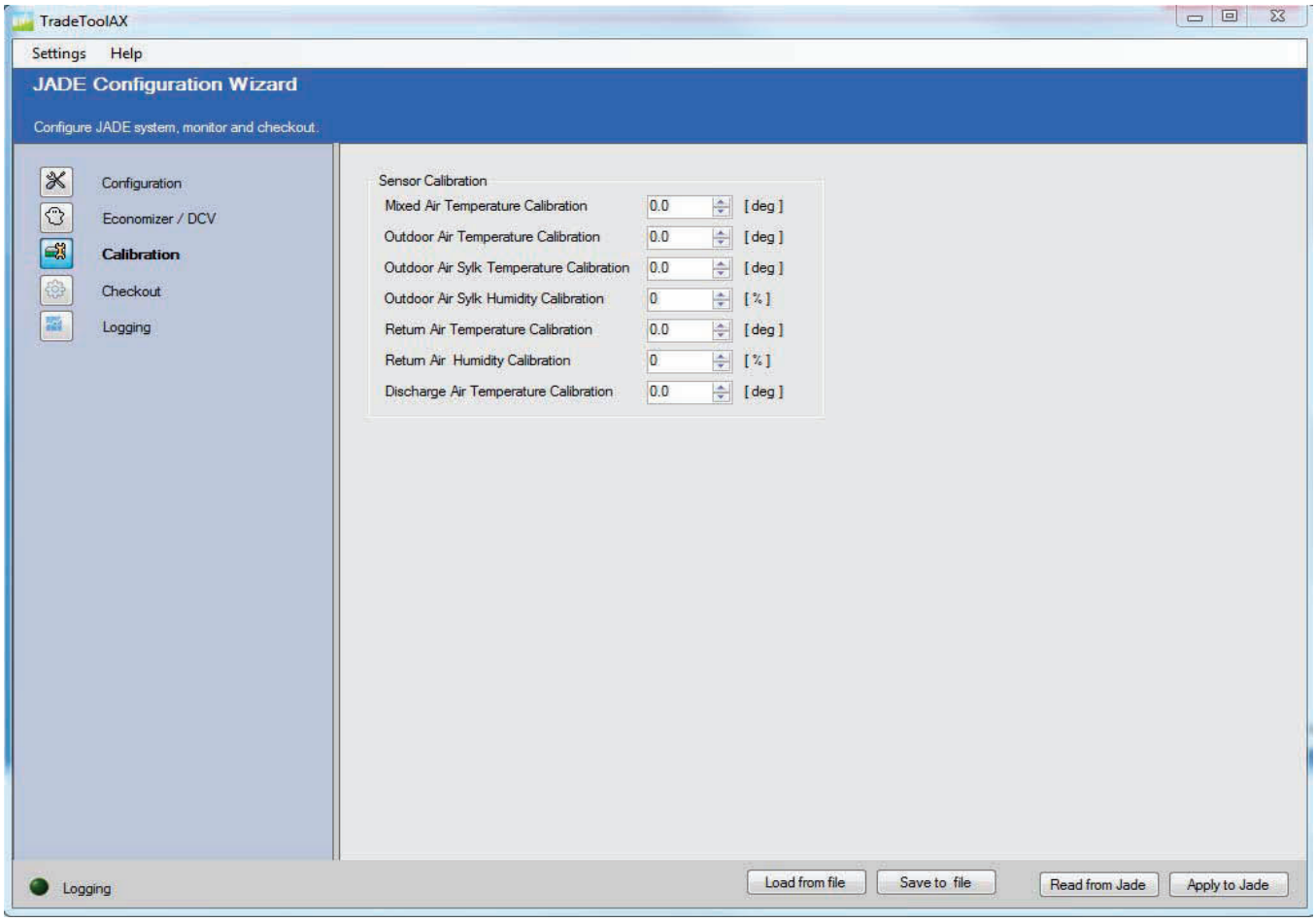

Calibration tab allows the operator to adjust for an out of calibration temperature or humidity sensor.

In the JADE™ economizer controller there is a sensor offset calibration that allows you to change the economizer program to adjust for an out of calibration sensor.

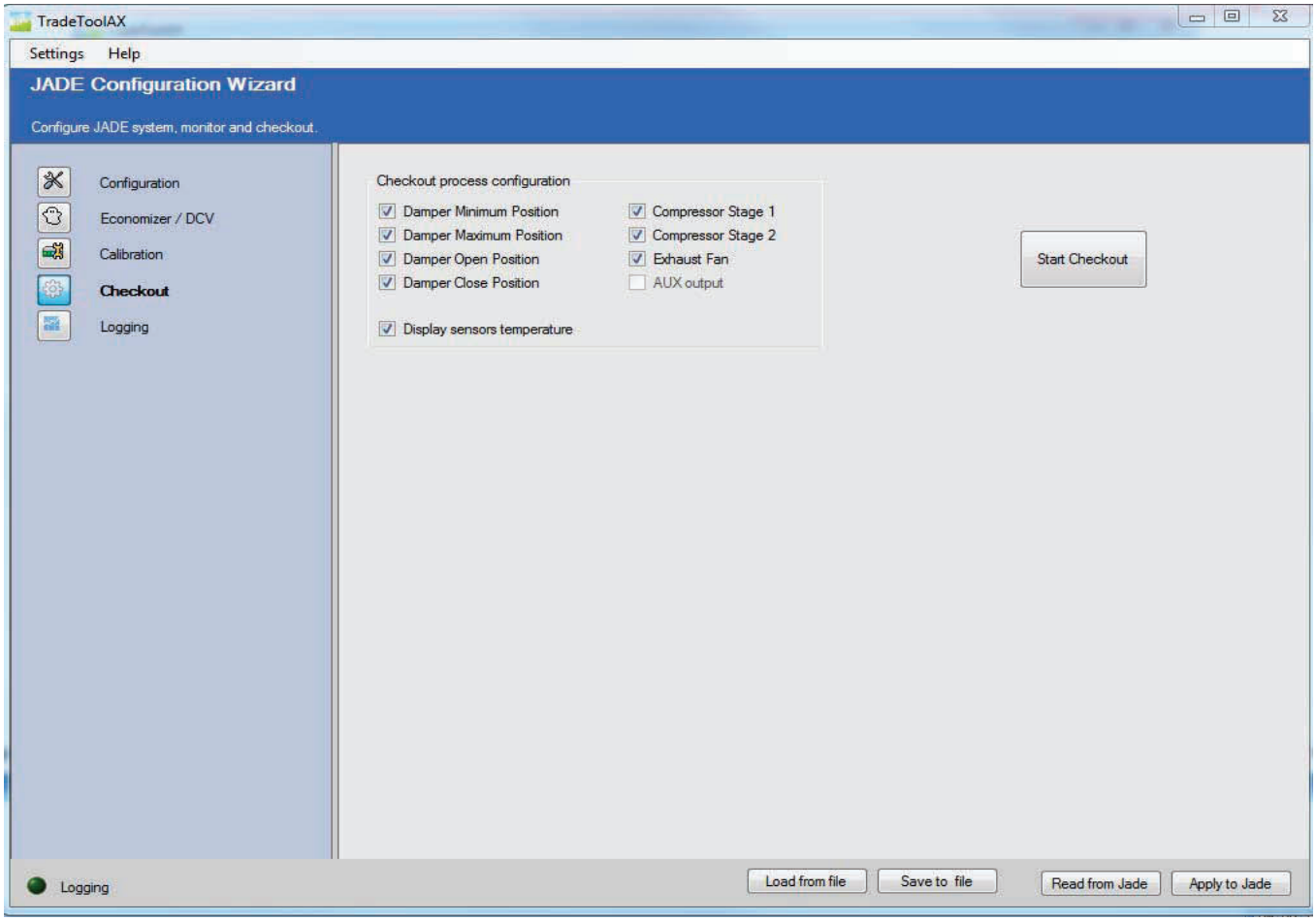

Another benefit of this tool is the ability for semi automatic checkout of the economizer system.

From the list of the parameters shown on the screen choose the ones you would like to test by clicking the box next to it.

The last box gives you the ability to display the temperature that the sensors are reporting to the economizer controller.

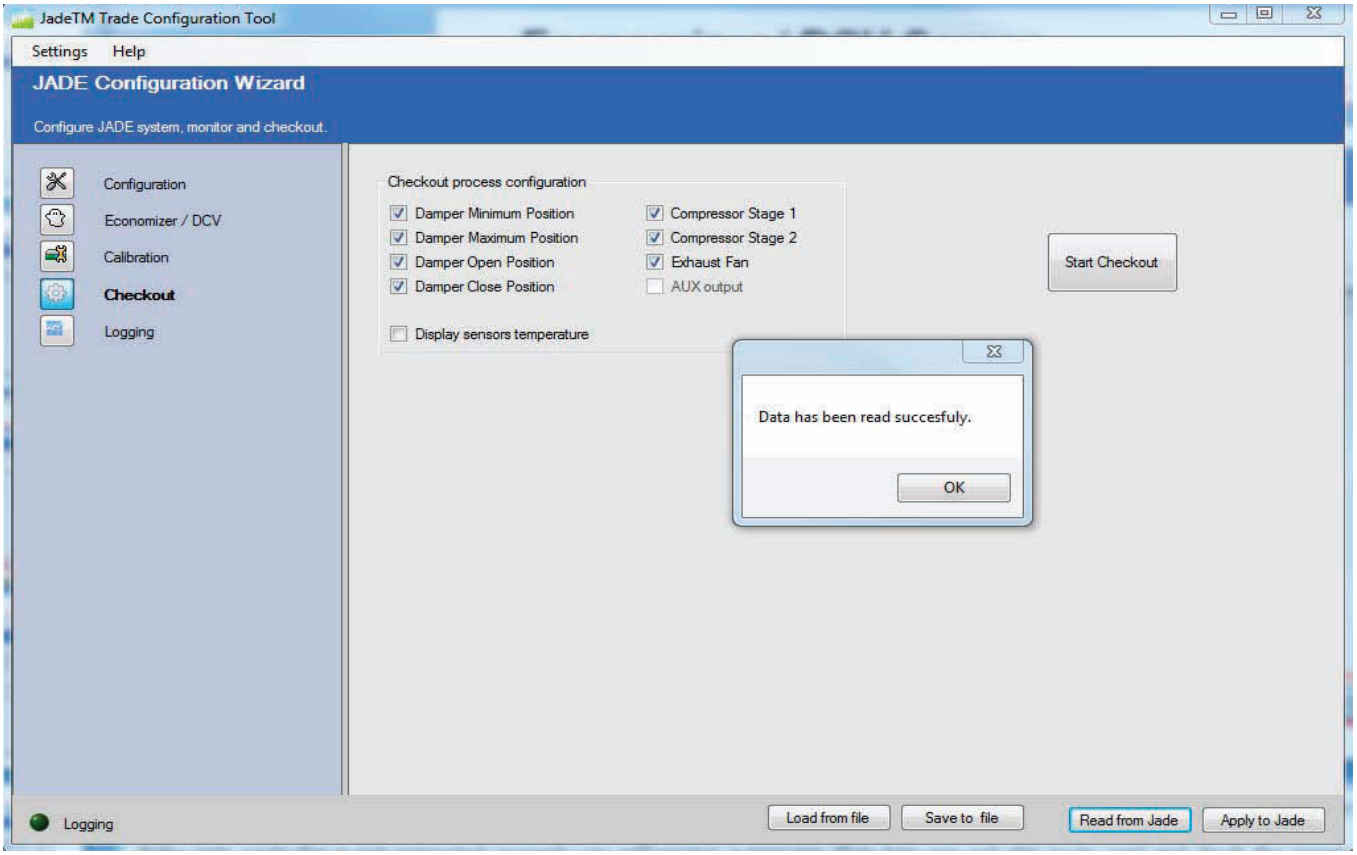

You can check the settings on the JADE™ controller that you have connected by clicking the Read from JADE™ button.

If the JADE™ controller is not connected properly you will receive a message that data was not able to be read. Check the power to your JADE™ and connection between the JADE™ and PC module and between the PC module and the personal computer.

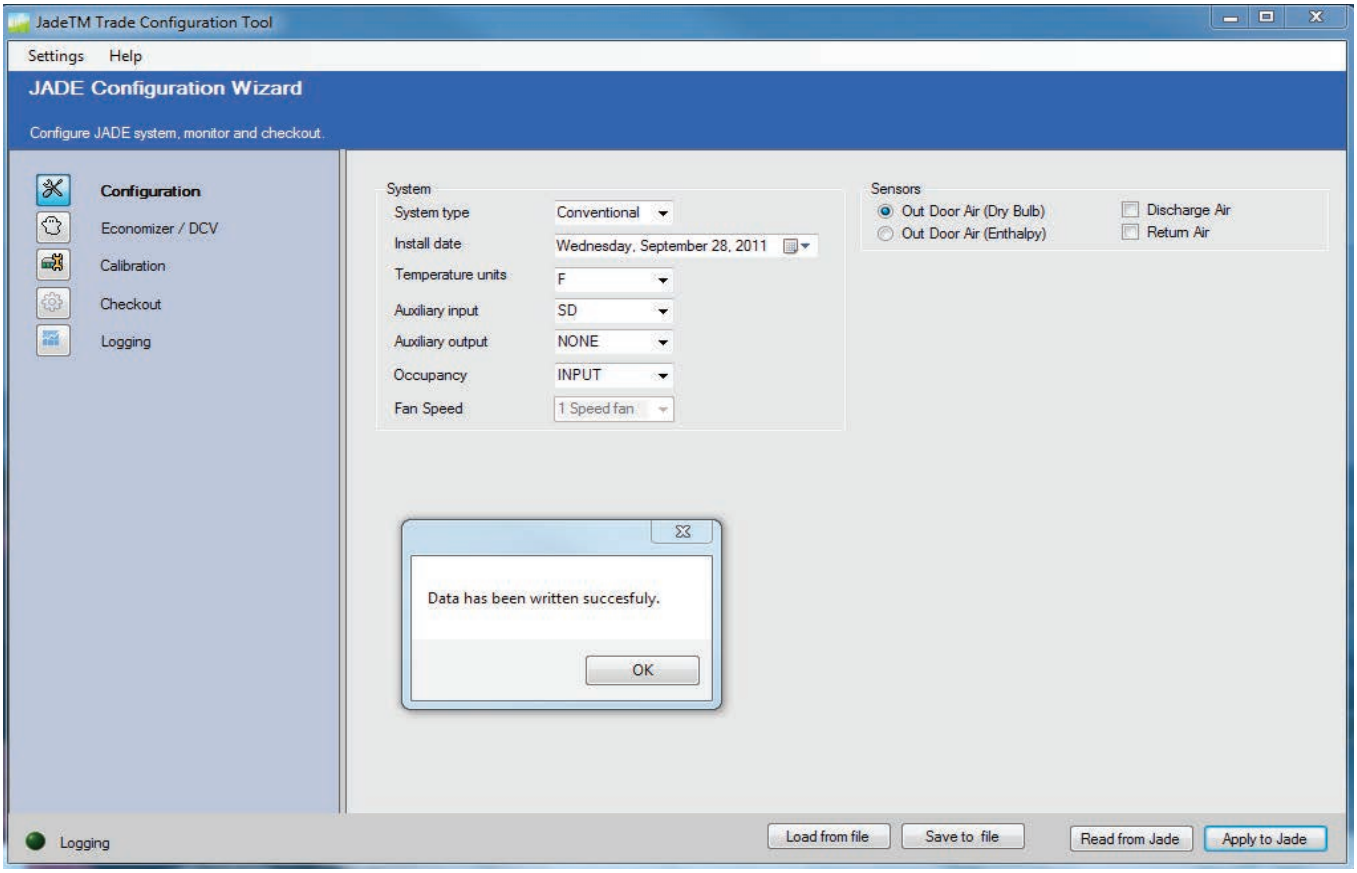

Or you can click on the Apply to JADE™ button in the bottom right of the screen after you selected correct configurations. This feature downloads your configuration to the JADE™ controller.

Once information has been applied to JADE™ successfully you see a pop-up window indicating the data has been written successfully to the JADE™ controller.

Note that you can Read from or Apply to JADE™ while in any of Configuration screens on the left.

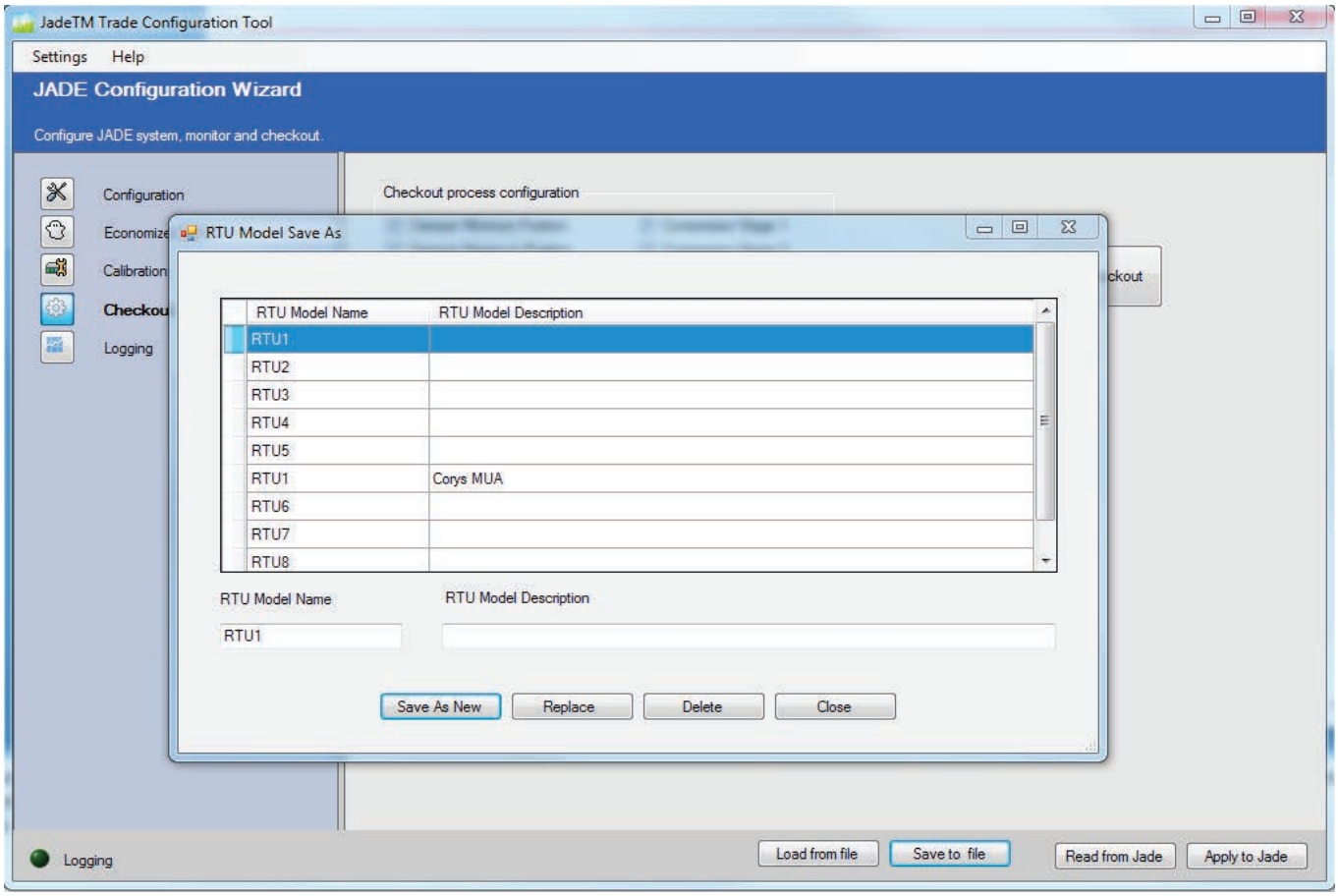

If you have a preferred configuration for a building or location and do not want to reconfigure the JADE™ economizer controllers every time you use one, you can save the configuration file on your personal computer and configure the JADE™ economizer controllers from this file.

When click Save to file you'll be able to save your file as new or replace an existing file. You can customize your RTU Model Name and Model Description.

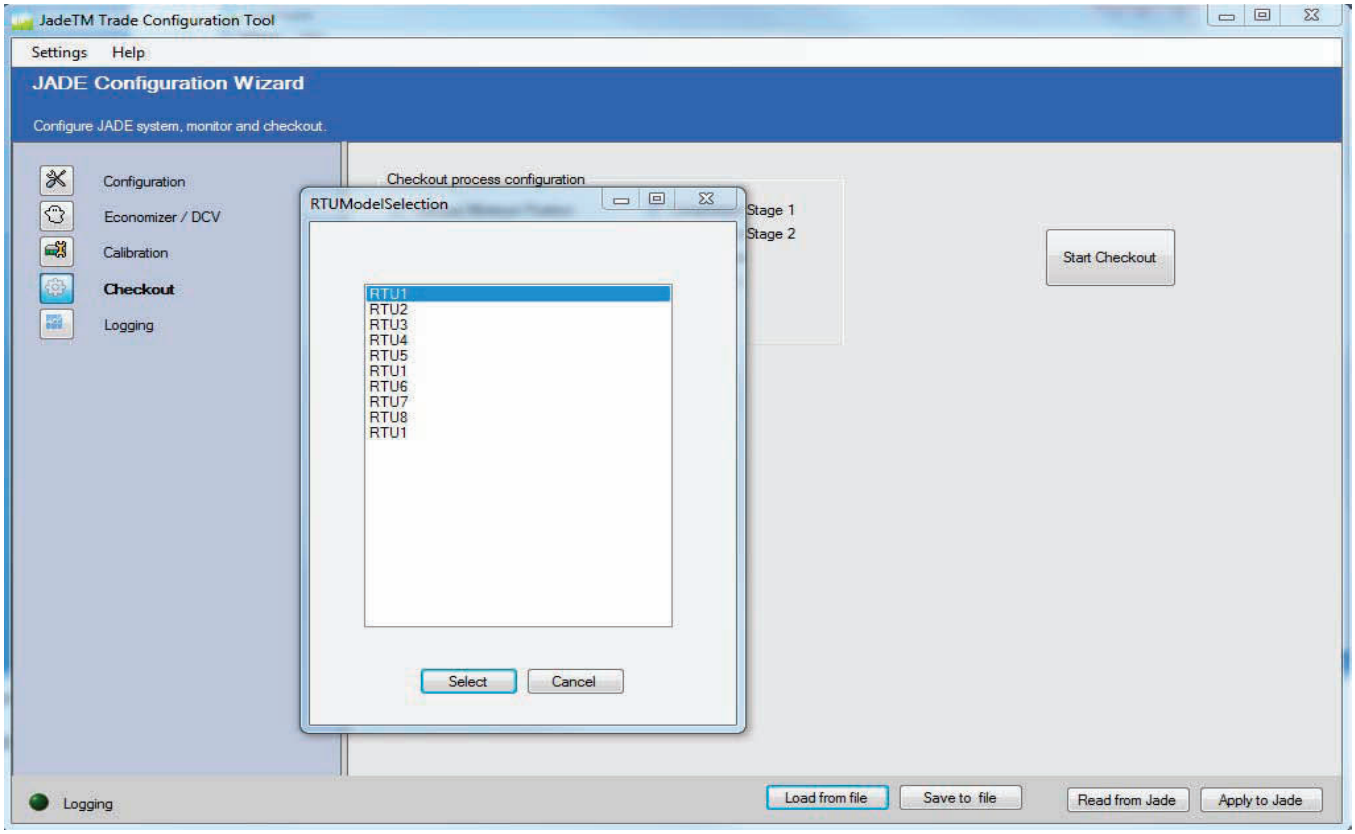

By clicking Load from file button you will be able to download a saved file from the list and apply those settings to JADE™.

Note that you can Load or Save to file while in any of Configuration screens of the left.

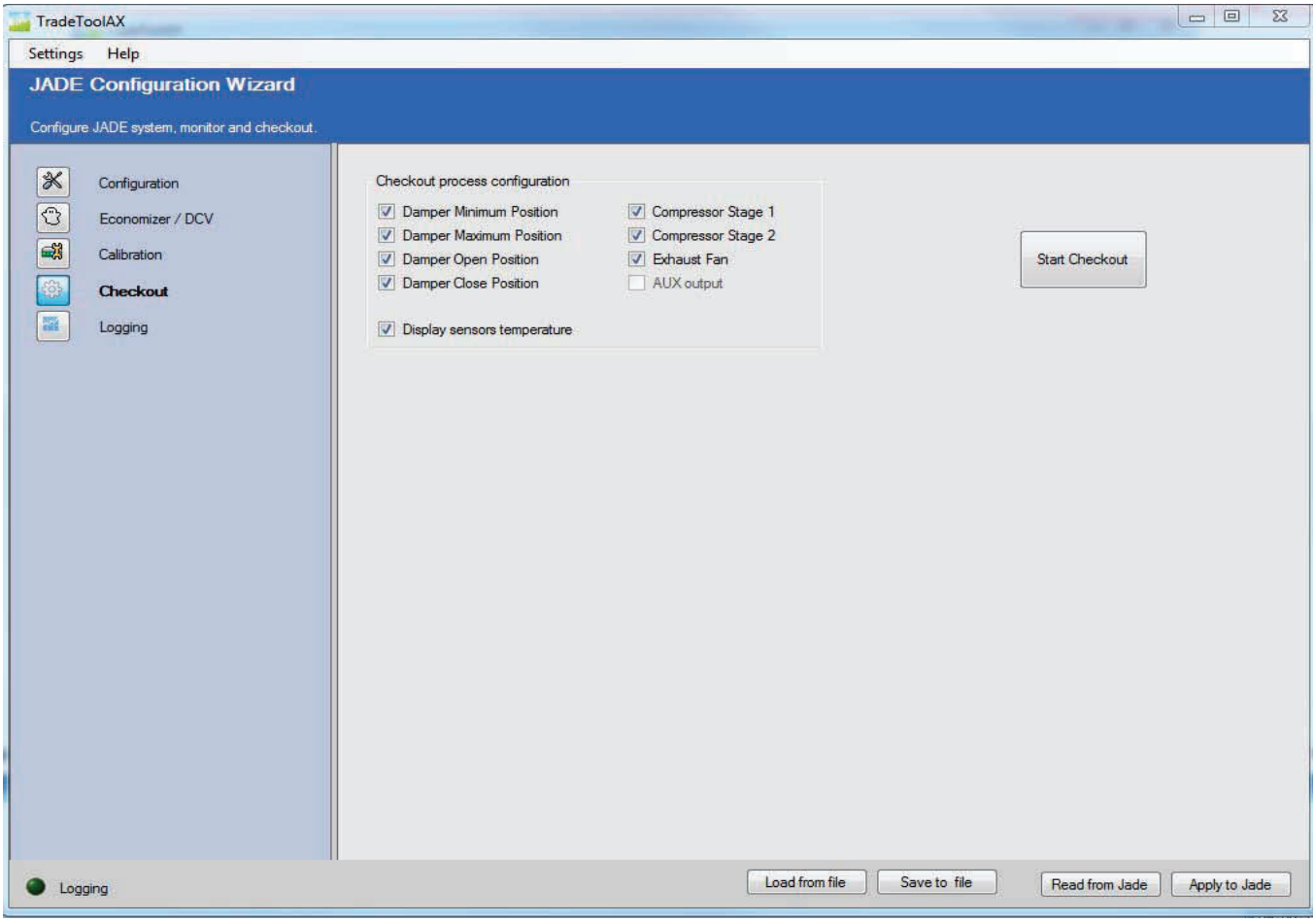

When you have chosen the parameters, click “Start Checkout” button.

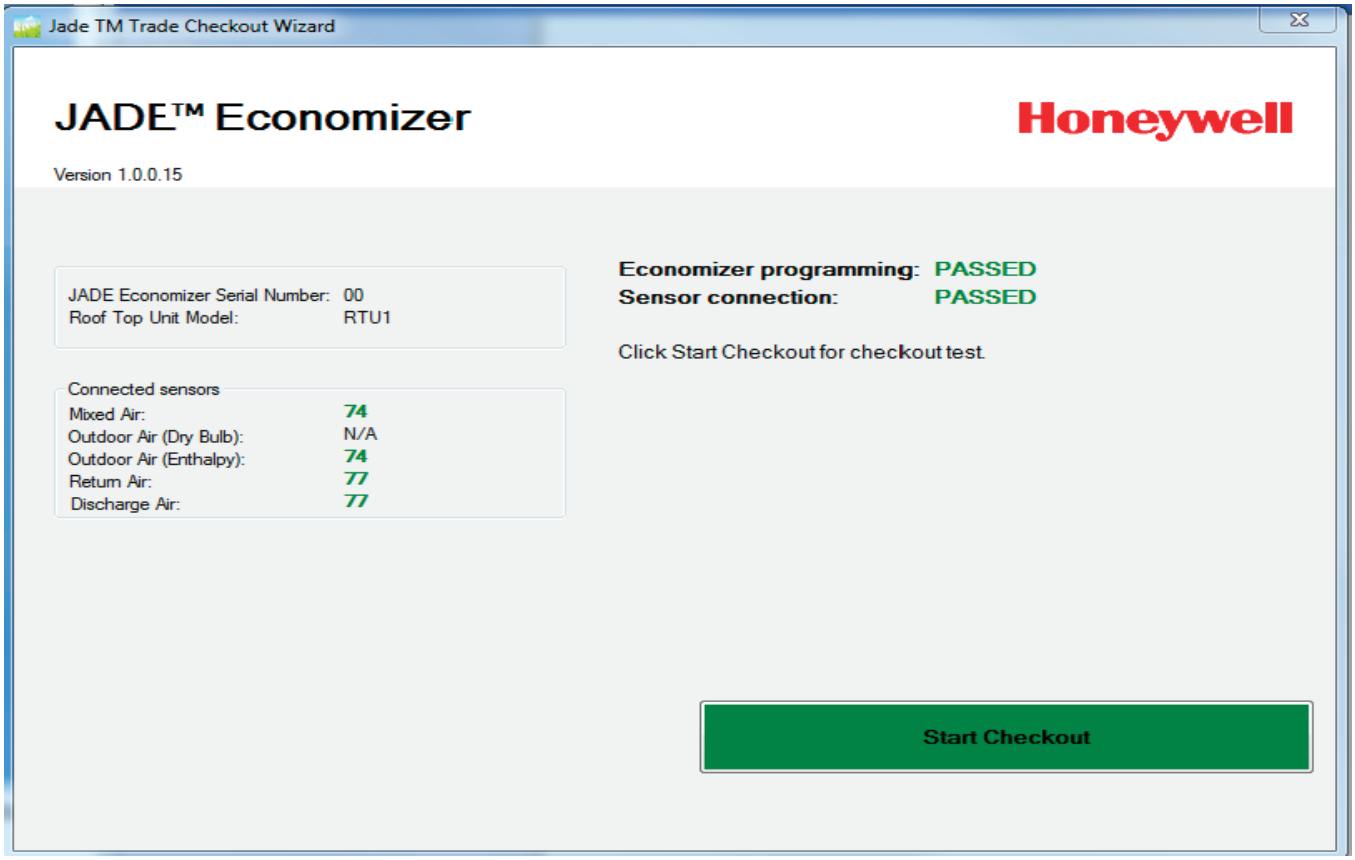

A checkout window will display. If you checked Display sensors temperature in the checkout screen, you'll see those temperatures display.

The screen will only display the sensors that are connected and are reporting to the economizer controller.

If economizer and sensors are connected properly to the PC MOD the word "Passed" will display.

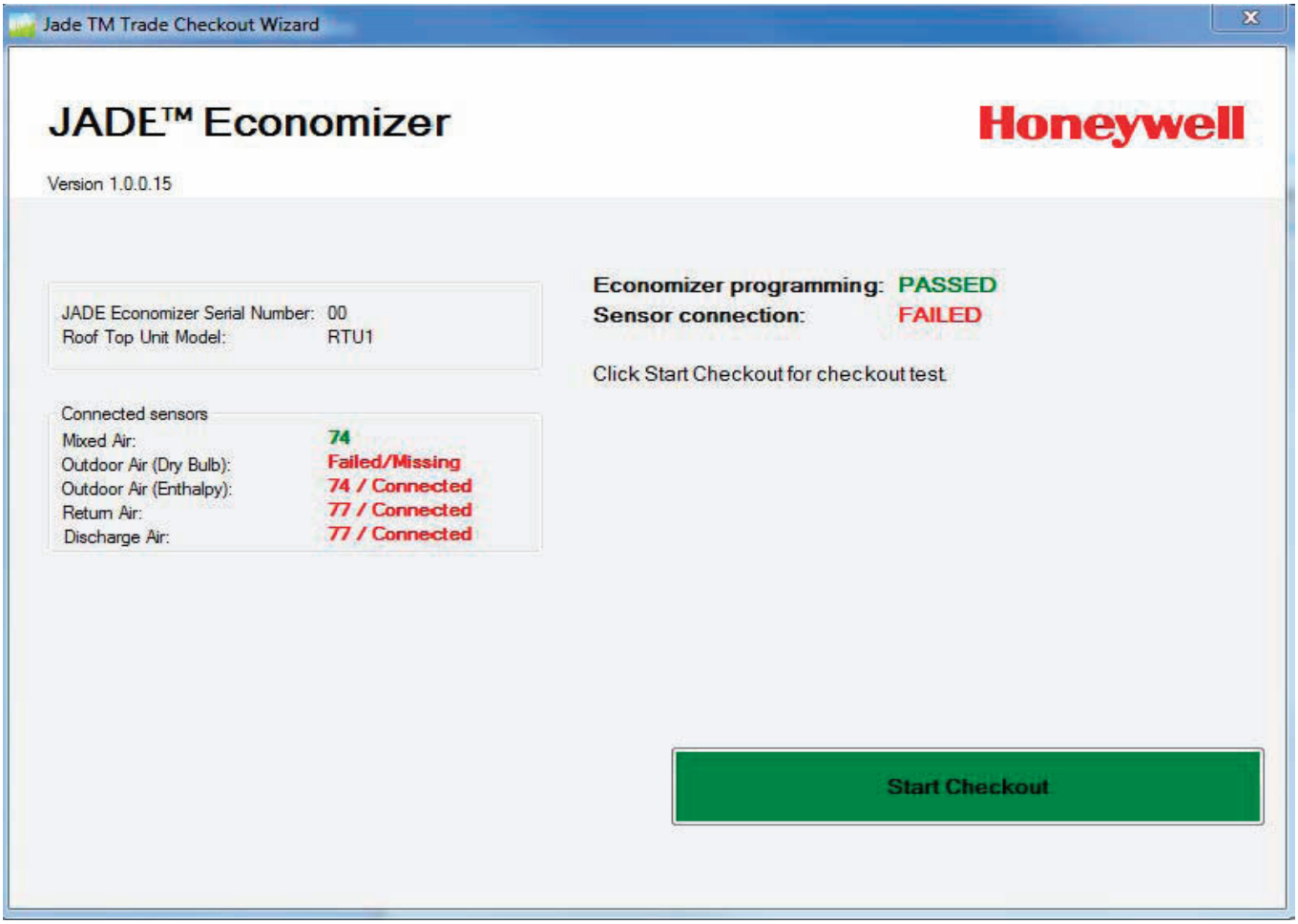

If there are issues with the sensor selection and actual sensor connections the display will change to red letters.

The Fail/Missing means that you failed to connect the sensor that you have chosen in the checkout tab. In this example the Dry bulb Outdoor air sensor was chosen on the checkout tab and that sensor is missing in the system.

The 74/connected means that the system is reporting an Enthalpy Outdoor Air temperature at 74 degrees F and the enthalpy sensor is connected which contradicts your set points.

Note the sensor connection is reporting failed in red letters also.

You will need to go back to the configuration screen and change your sensors to match the economizer controller configuration that is being reported.

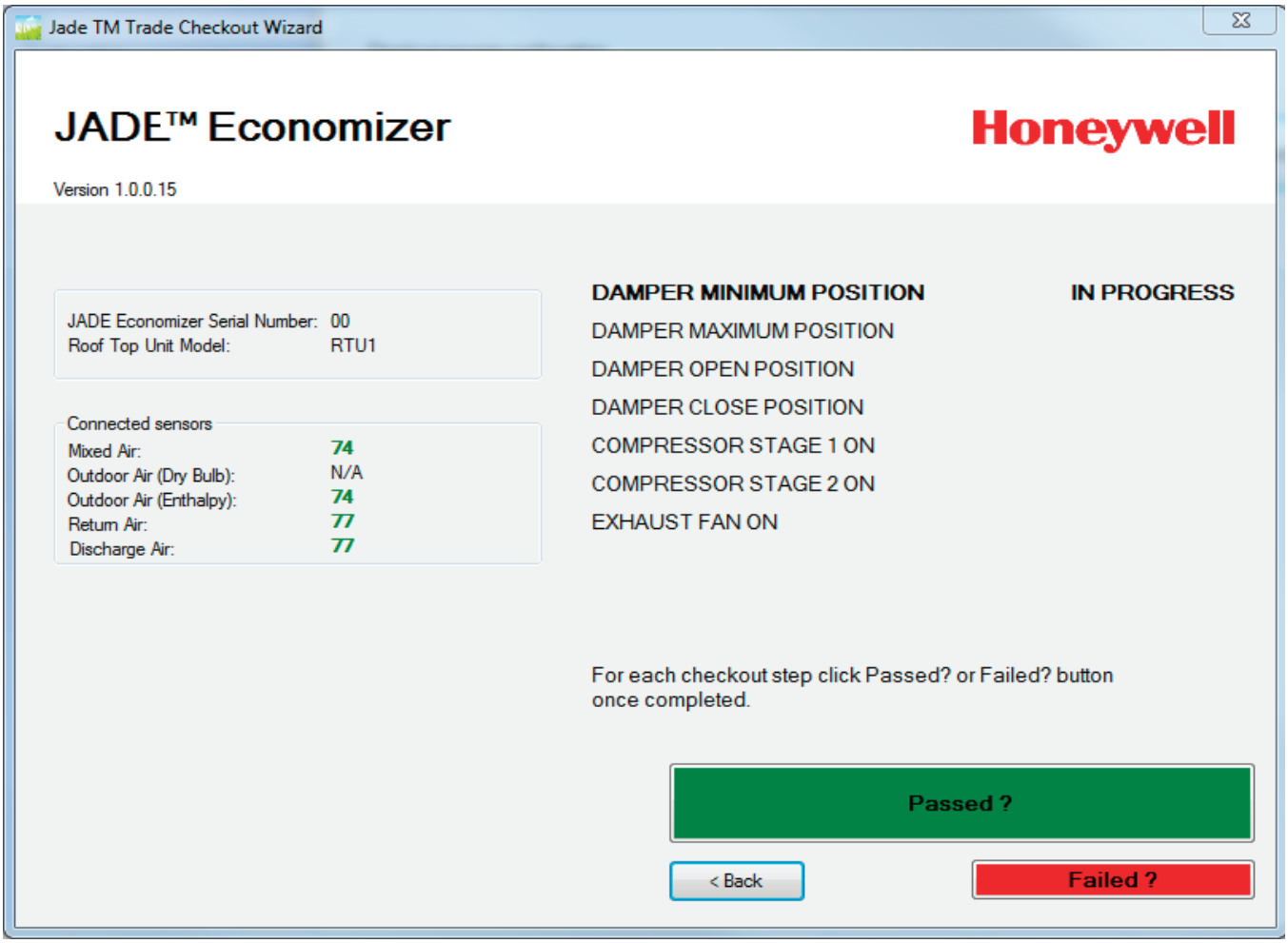

When all settings match and are shown in green letters, you can click “Start Checkout” button.

As you go through the check out process you will need to observe the movement of the dampers and confirm the contacts are made to turn on the stages of compressor on the roof top unit.

When each step is confirmed as working, click the Passed button to move to the next test. If you have a failure, example damper failed to open, click the Failed button below to move to the next step.

Do not interrupt a function while it is in process. Wait until the function check is complete then you can stop the test process.

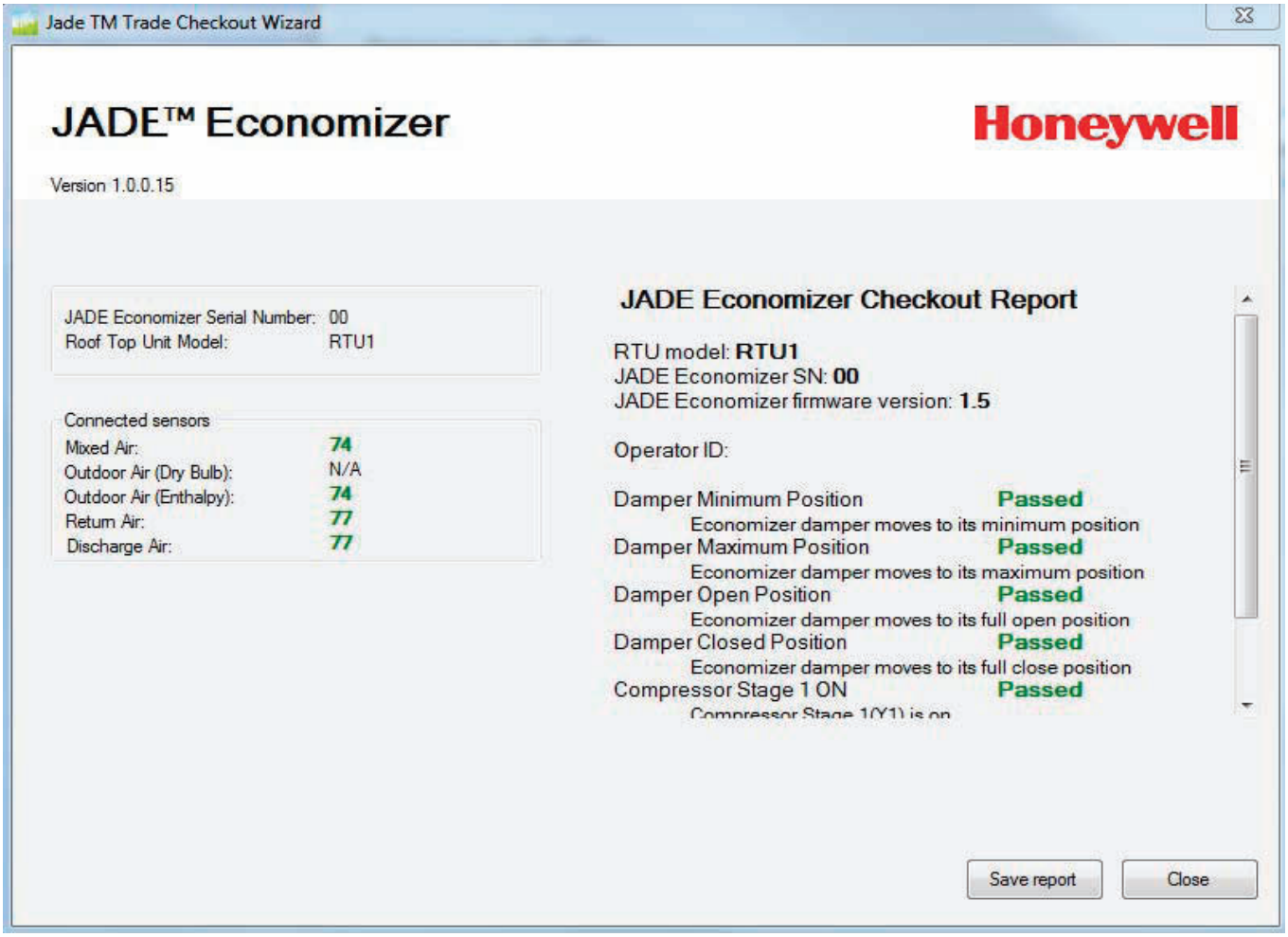

After you have completed the checkout, the tool will generate a report of the checkout process which you can save on a customized file on your Personal Computer by clicking Save report button.

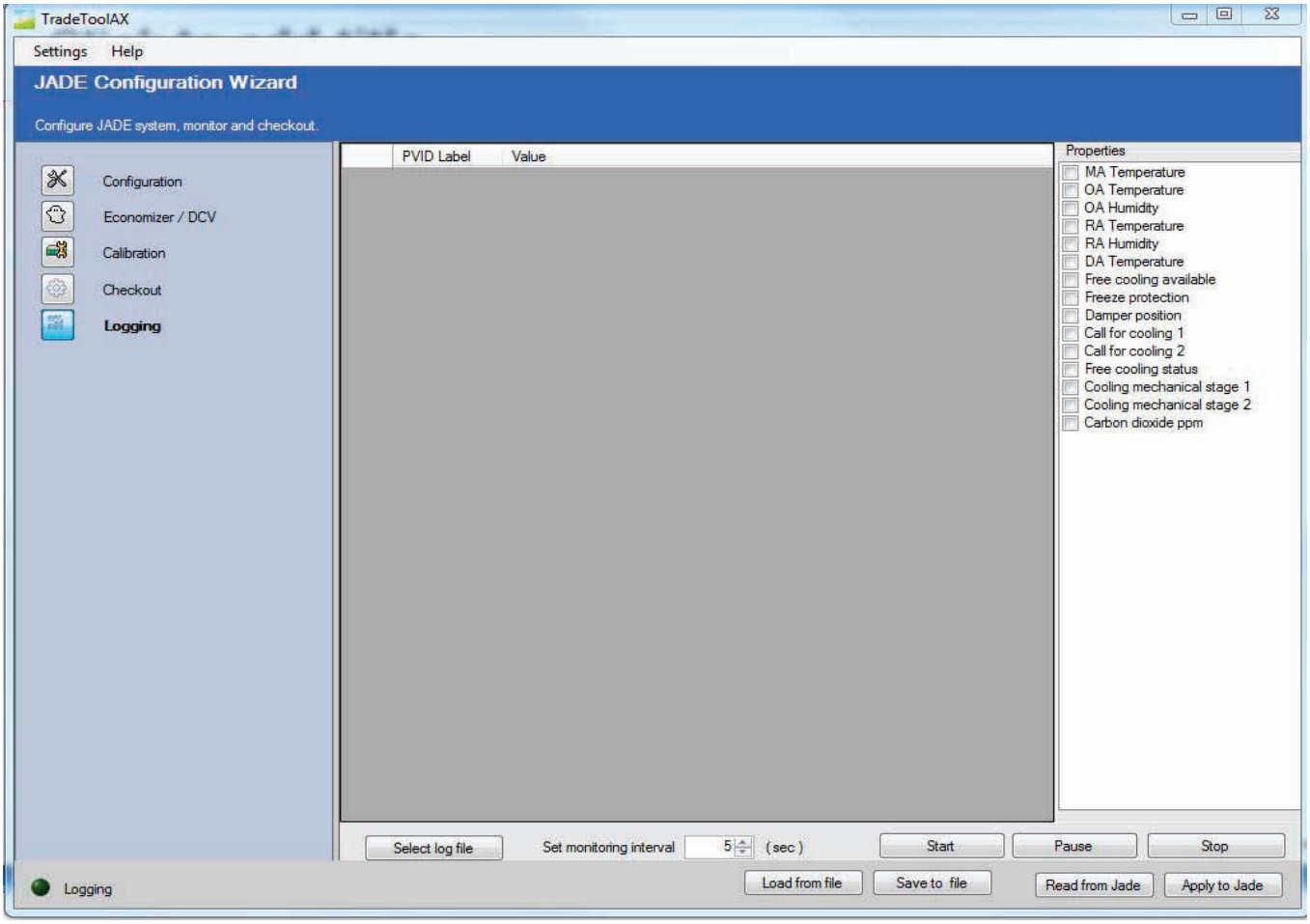

The logging screen allows you long term recording and verification for validation that the economizer is working and the building is operating to save energy. On the right side of the screen, select all properties that you would like to log. During the logging process the personal computer will need to be connected to the PC module since the data will be saved on the personal computer file, not in the module.

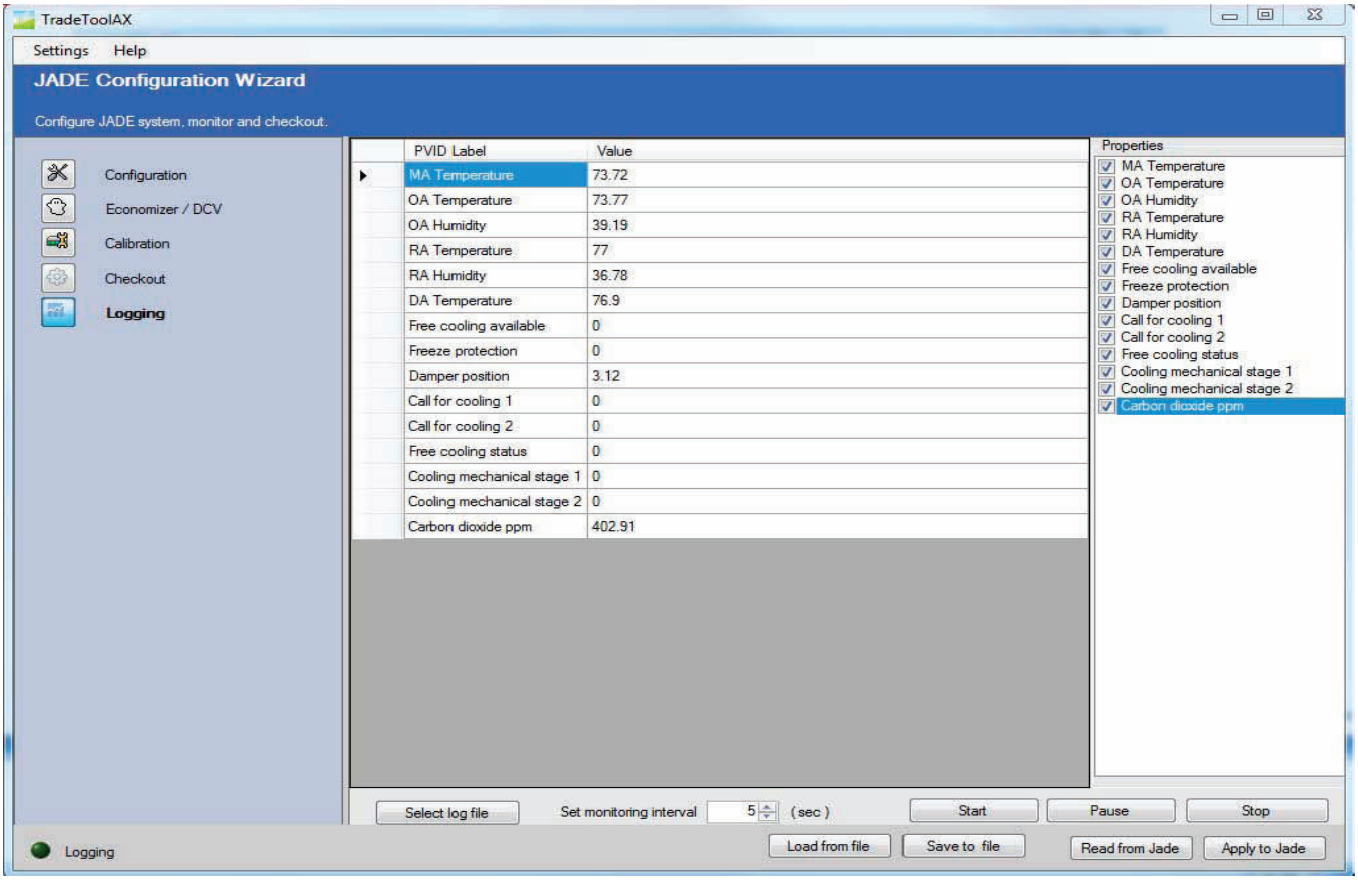

As you select the parameters you want to log on the right, you will see the current value of the selected points displayed in the center of the screen.

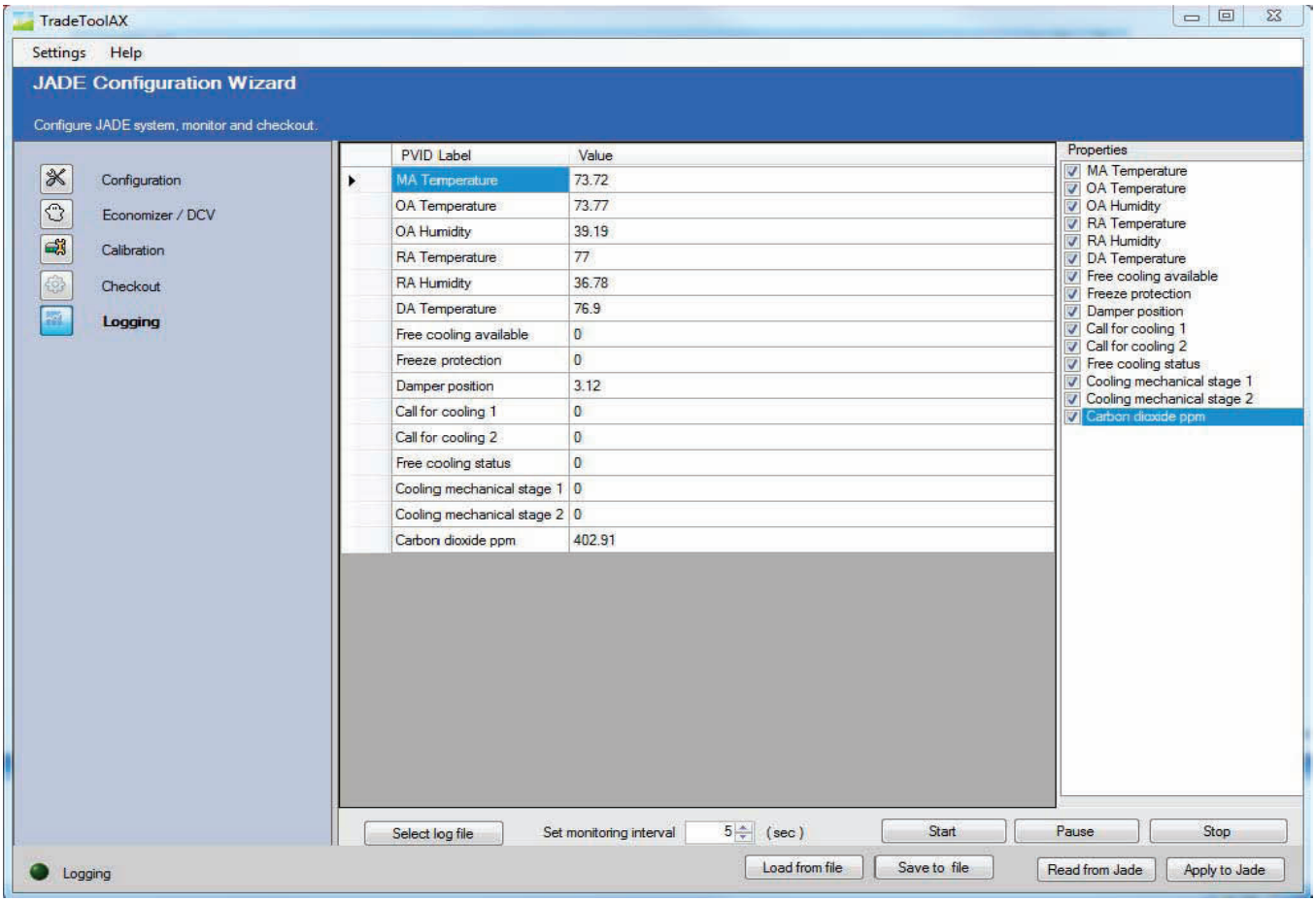

Select the log file where you would like to store the data on the personal computer then select the interval of time for the data collection. The range for the data collection is from 5 seconds up 300 seconds in 5 seconds intervals.

Click the Start button. The logging light in the lower left corner would start blinking; indicating data is being recorded in the interval you selected. You can Pause or Stop this recording at any time.

Once you stop the logging and want to check the data, open the file that you saved the data in.

The file is .csv and can be opened using Microsoft excel.

Section 12 - Sensors for Economizer Modules

Temperature

C7250A

C7650

C7046

C7150

Carbon Dioxide

C7232

C7632

Enthalpy

C7400S

C7400A
(legacy)

Sensor Features

Sensor Series	Type of Sensor	Application	Comments	Specific Product Number
C7046	Temperature	Discharge Air		C7046A1004
				C7046A1038
C7150	Legacy Temperature	Mixed Air 3K ohm for use with legacy economizer controllers (W7459 and W7212)		C7150B1004
			OEM	C7150B1020
C7400A	Legacy Enthalpy Sensor	Enthalpy Changeover for use with legacy economizer controllers W7459 and W7212		C7400A2001
			OEM	C7400A2009
			OEM	C7400A2017
			OEM	C7400A2025
C7400S	S-bus Communicating enthalpy sensor	Enthalpy sensor (used with W7220 economizer)		C7400S1000
C7650	Legacy Temperature	Legacy Dry Bulb Changeover for legacy economizers (W7459 and W7212) used only in differential changeover applications		C7650A1001
C7250	Temperature 20K	Dry Bulb Changeover		C7250A1001
C7660	Legacy Temperature	Single (referential) dry bulb changeover for legacy economizers (W7459 and W7212)		C7660A1000
C7232	Carbon Dioxide	Indoor Wall Module	Display, Relay Output	C7232A1008
		Indoor Wall Module	No Display, Relay Output	C7232A1016
		Indoor Wall Mount	Display, No Honeywell Logo, Relay Output	C7232A1024
		Indoor Wall Mount	No Display, No Honeywell Logo, Relay Output	C7232A1032
		Duct Mount	Display	C7232B1006
		Duct Mount	No Display	C7232B1014
		Duct Mount	Display, No Honeywell Logo	C7232B1022
		Duct Mount	No Display, No Honeywell Logo	C7232B1030
C7632		Wall Mount	No Display, No Adjustment Settings	C7632A1004
		Duct Mount	No Display, No Adjustment Settings	C7632B1002
C7262		Wall Mount	Display, Honeywell logo	C7262A1008
C7262		Wall Mount	No display, Honeywell logo	C7262A1016

Type of Sensors for Economizer

The C7400A enthalpy sensor combines temperature and humidity measurements into a single device. The output is 4 to 20 mA. All sensing elements are solid state electronics which have been determined to be durable over more than fifteen years of usage. There are no setpoints on the sensor since all adjustments are done on the control module.The C7400A sensors are used with the legacy economizers, e.g., W7459 and W7212.

C7400 Enthalpy

In some dry, arid climates it may be sufficient to use a dry bulb sensor in place of a C7400 enthalpy sensor to achieve energy savings. The output of the C7650 sensor has large dead bands and should only be used in differential temperature changeover applications where there is a C7650 sensor in the return air and one in the outdoor air and the economizer compares the two temperatures for the lower temperature. Using the A, B, C, or D settings on the economizer in single dry bulb mode results in a 10 degree “dead band” with the C7650 dry bulb sensor. See chart. The economizer will allow free cooling when the temperature is rising through the dead band until the temperature rises above the highest temperature on the dead band. On temperature decline, the economizer will not reset to OK for economize until the outdoor temperature goes below the lower temperature. This only happens if power is to the economizer during the decline through the deadband.

C7650 Temperature

During the temperature decline if the economizer power is cycled off when the temperature is in the 10F deadband, the economizer will determine the outdoor air temperature is good for free cooling and will reset the OK to economize.

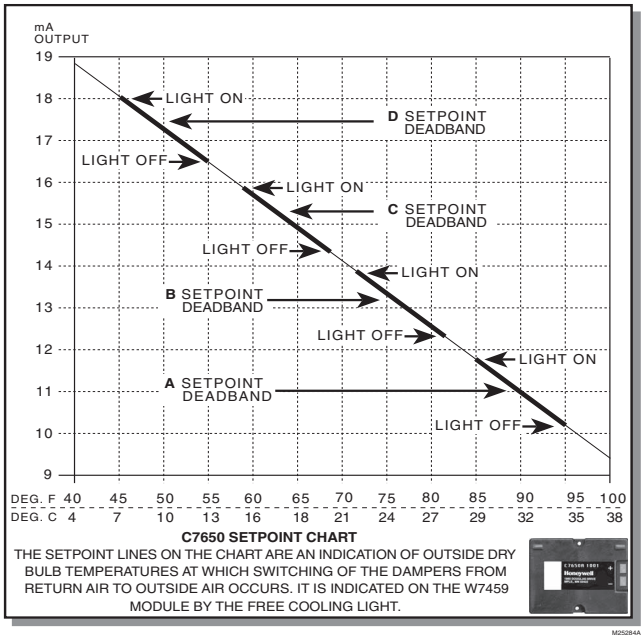

C7650 SETPOINT CHART

THE SETPOINT LINES ON THE CHART ARE AN INDICATION OF OUTSIDE DRY BULB TEMPERATURES AT WHICH SWITCHING OF THE DAMPERS FROM RETURN AIR TO OUTSIDE AIR OCCURS. IT IS INDICATED ON THE W7459 MODULE BY THE FREE COOLING LIGHT.

M25264A

In differential mode the signal from the dry bulb analog sensor to the economizer is 10 to 20 mA so the economizer can choose the higher output (indicates lower temperature) and can choose which temperature is better.

Lets look at an example: When using a C7650 and the C setting is chosen on the economizer logic module, the module will open the outside air damper at approximately 58F. When the temperature is rising, the module will allow free cooling until the temperature reaches 68F. At this point the module will determine the outdoor temperature is no longer good for free cooling and will turn on the mechanical cooling. The temperature needs to drop to below 58F for the economizer to reset and allow free cooling without mechanical cooling again UNLESS the power is turned off to the economizer and the economizer is allowed to reset.

The C7660 sensor was developed to eliminate the 10 degree F deadband issue using the C7650 in single dry bulb applications. When using single with Honeywell legacy economizers, replace the C7650 with the C7660. The C7660 has a 3 position switch used for setting the outdoor changeover temperature. There are 8 user selectable changeover temperatures: 48F, 53F, 55F, 58F, 63F, 68F, 73F, or 78F with a +/- 1F hysteresis around the selection temperature. If you change the temperature change over setpoint the change is made in real time so you can reset the changeover temperature without recycling power.

C7660A Temperature

C7046 Temperature

C7150 Temperature

C7232A

C7632A

Carbon Dioxide

The sensor now contains the algorithm and will send either a 4mA OR a 20 mA signal to the economizer where 4mA is NOT OK to economize and 20mA is OK to economize.

For example if the operator selects a 73F change over, the sensor will send a 20 mA signal to the logic module at 72F and below and will send a 4 mA signal to the logic module at 74F and above.

The C7660 can only be used in referential mode or single dry bulb only, it cannot be used in differential dry bulb mode. If you are using differential mode it is recommended to use two of the C7650 sensors.

The legacy economizer modules are all provided with sensor connections for either a mixed or supply air sensor input to modulate the mixed air dampers. Either the C7046A or C7150B can be used for this function since the resistance curves for both are identical. The C7046A is 8 inches (20 cm) long which makes it a better selection for larger air handlers than the single point C7150B. When installing the C7150B use a simple smoke bomb to determine air flow and locate the sensor in a location where the OA and RA have the best mix. Do not use a smoke bomb in an occupied building.

The DCV economizer modules can be used with any indoor air content sensor with a 0 or 2 to 10 Vdc output. For most indoor applications Honeywell C7232 or C7632 carbon dioxide sensors will be used. They are available in either wall or duct mount versions with or without display.

C7150 and C7046 Mixed and Supply Air Sensors

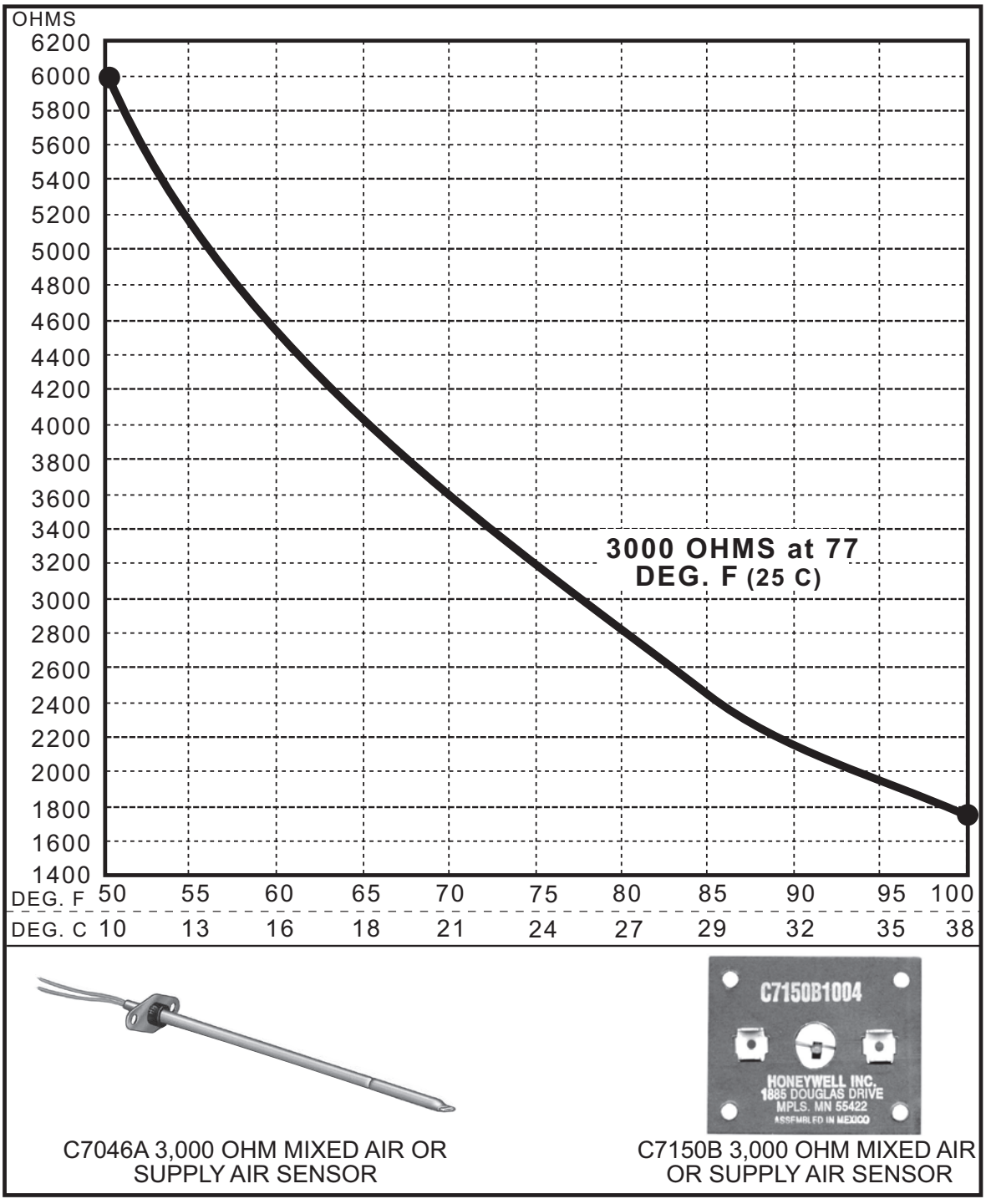

C7046A 3,000 OHM MIXED AIR OR SUPPLY AIR SENSOR

C7150B 3,000 OHM MIXED AIR OR SUPPLY AIR SENSOR

M25285

This chart is for the C7046A or C7150B supply or mixed air sensors designed to be used with all of the economizer logic modules. These sensors have negative temperature coefficients, as the ambient temperature at the sensor increases, the resistance of the sensor decreases. It changes 70 ohms in resistance for every 1°F (0.6°C) change in temperature.

Mixed or Supply Air Sensor Control Sequence

The control sequence for the sensor connected to the mixed or supply (discharge) air temperature terminals on all of the economizer modules is basically the same. When the space is occupied, the outdoor air damper remains at the minimum position until there is a call for cooling from the commercial thermostat. If the mixed or supply air temperature is below the lower end of the setpoint range of 50°F (10°C) the outside air dampers will remain at minimum. If the measured temperature is within the range of 50 to 56°F (10 to 13.3 °C) the outside dampers will not be modulated open or closed. If the mixed air temperature is above 56°F (13.3°C) the outside air dampers will be modulated open until the temperature is within the range or the dampers are full open. If the enthalpy of the outside air is too high, the outside air dampers will be returned to minimum.

Carbon Dioxide Sensor

Honeywell C7632A
Carbon Dioxide Sensor

Carbon dioxide (CO_2) is frequently used as the sensor for demand ventilation control. People exhale CO_2 as they breathe. If there is a large number of people in a space the level of CO_2 will increase. When a CO_2 sensor is installed in the space, a signal is sent to the air handler mixed air control which modulates the outside air dampers. The required ventilation volume for a room increases when occupancy increases. When people leave the space, CO_2 levels will decrease and the outside air dampers close to a more economical setting. Ventilation cost can be controlled by using CO_2 sensing in addition to economizer functions.

An indoor air quality analysis should be done to evaluate the air quality in a building. Analysis of all compounds in addition to carbon dioxide is required to evaluate the overall healthiness of a building. Contaminants, such as volatile organic compounds, are not detected with a CO_2 sensor. Complex electronic equipment is required to fully test for the presence of all the various compounds which may be in the air supply. CO_2 sensor based ventilation control is an enhancement to economizer control, not a substitute for a total professional air quality evaluation of a building.

If you have a building with a high concentration of a gas other than CO_2, consider using the IAQP ventilation method but always consult a professional trained in control of gases.

JADE™ Economizer (W7220) Sensors

The JADE™ economizer does not use the same sensors as the legacy economizer controllers. The JADE™ economizer controller uses new digital sensors for control. The Mixed Air Temperature and Outdoor Air temperature only sensors are 20k negative temperature coefficient, or NTC, sensors (C7250).

The Outdoor Air, Return Air and optional Discharge Air sensors communicate with the JADE™ on a two-wire communication bus, or Sylkbus. (C7400S). The JADE™ sensors can be can either be wired using a two-pin Molex connector or a two-pin side connector. Each sensor unit pack includes a two-pin side connector in the packaging.

All Outdoor Air, Return Air and Discharge Air sensors are the same part number. During installation, the sensor is set for the appropriate type using the three-position DIP switch located on the sensor.

Once installed, a sensor can be changed to a different application by simply changing the DIP switch setting. The brown or orange color of the label matches the wiring terminals on the JADE™ economizer controller.

The JADE™ recognizes the sensors and configures the system to the valid sensors installed in the system. If two sensors are set as OA the JADE™ will give an error message which will not clear until the sensor has been reset.

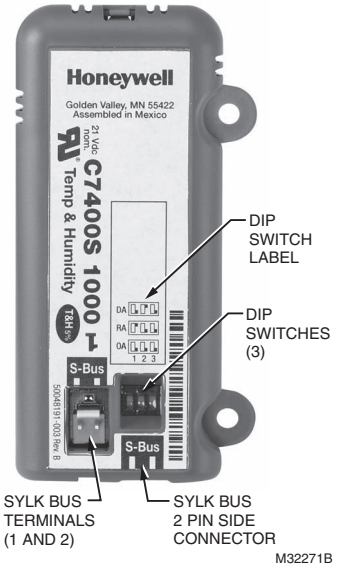

C7250A 20k temperature sensors

C7400S Sylkbus sensors

C7250A (MAT)

C7250A (OAT)

Note that the old C7150, C7400A and C7400C analog sensors used with the W7212 and W7459 economizers are not compatible with the W7220 and must be replaced with:

Either one C7250A Mixed Air Temperature sensor plus one C7250A Temperarure Only Outdoor Air sensor for dry bulb temperature changeover;

C7250A (MAT)

C7400S (OA)

OR one C7250A Mixed Air Temperature sensor and one C7400S Outdoor Air sensor for single enthalpy changeover;

C7250A (MAT)

C7400S (OA)

C7400S (RA)

OR one C7250A Mixed Air Temperature sensor and two C7400S Outdoor Air and Return Air sensors for differential enthalpy changeover;

C7250A (MAT)

C7250A (OAT)

C7400S (RA)

OR one C7250A Mixed Air Temperature, one C7250A Temperature Only Outdoor Air sensor, and one C7400S Return Air sensor for differential temperature changeover.

S-bus in this case ignores the humidity input from the RA sensor.

Section 13 - Checkout

Honeywell has a checkout procedure for every economizer logic module. The checkout procedures are listed in the back of the Product Data Sheet or Installation Instructions shipped with every economizer or can be found at www.customer.honeywell.com. Type the part number in the search area and click on GO. Find the complete part number in red and click on it. The specific product number page will appear and click on the Literature tab and select either the Product Data Sheet or Installation Instructions. You can download the literature or print a copy directly from the site.

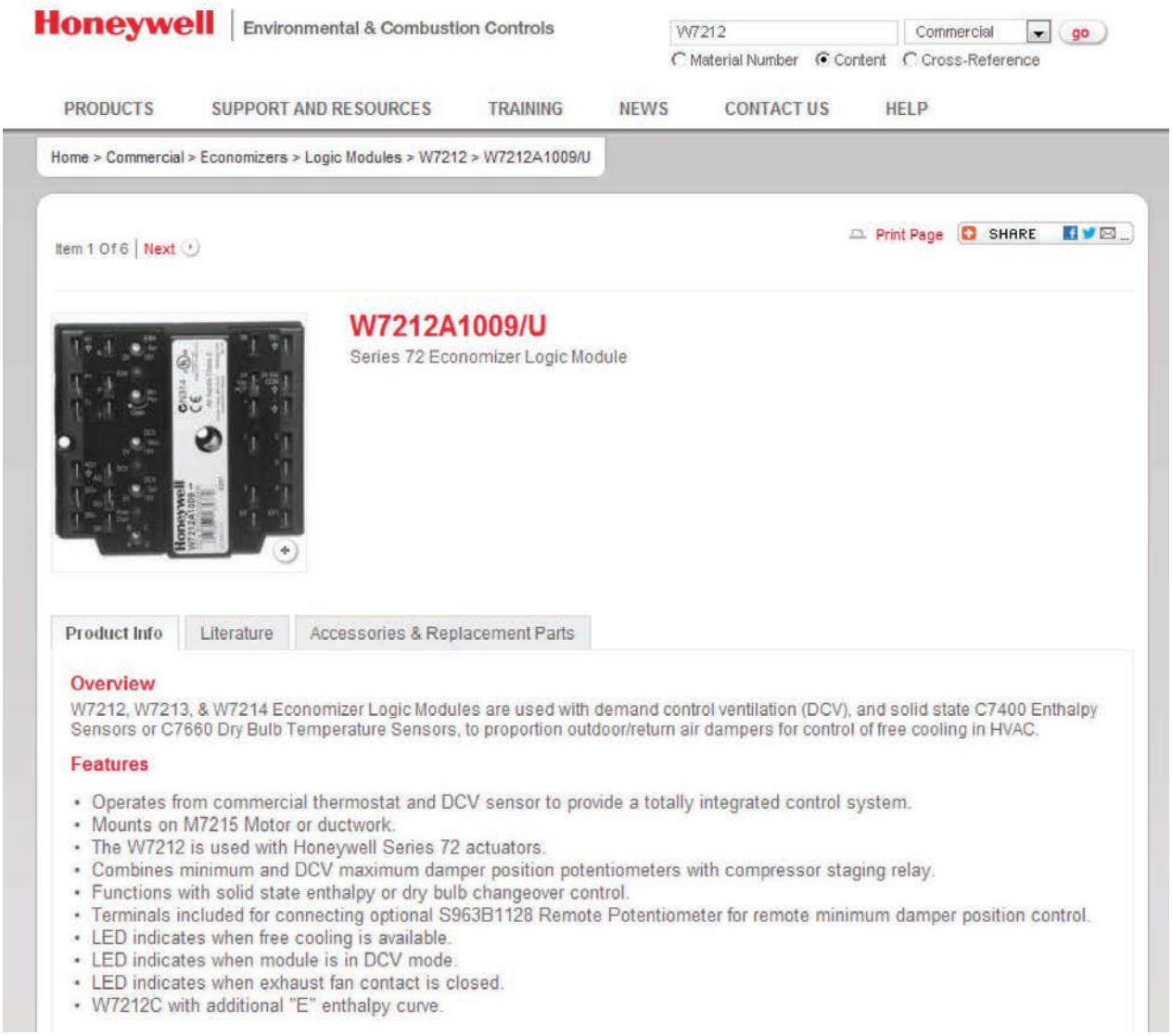

Standard Checkout Procedure

Table 3. Checkout for W7212, W7213, W7214 Economizers Connected to Honeywell Actuator.

Step	Checkout Procedure	Proper Response
1.	CHECKOUT PREPARATION	
	Disconnect power at TR and TR1.	All LED are off; Exhaust Fan contacts are open.
	Disconnect devices at P and P1.	
	Jumper P to P1.	
	Place 5.6K ohm resistor across T and T1.	
	Jumper TR to 1.	
	W7212 *only*: Jumper TR to N.	
	If connected, remove C7400 Enthalpy Sensor from terminals S_O and +.	
	Connect 1.2K ohm 4074EJM Checkout Resistor across terminals S_O and +.	
	Put 620 ohm resistor across S_R and +.	
	Set minimum position, DCV setpoint, and Exhaust potentiometers fully CCW.	
	Turn DCV maximum position potentiometer fully CW.	
	Set enthalpy potentiometer to D.	
	W7214 *only*: Jumper TR to O.	
	Apply power (24 Vac) to terminals TR and TR1.	
2.	DIFFERENTIAL ENTHALPY	
	Execute step one, Checkout Preparation.	—
	Place 620 ohm resistor across S_O and +.	—
	Place 1.2K ohm resistor across S_R and +.	Free cool LED turns on.

When the first line of a procedure states: “Execute step one. Checkout Preparation.” this directs you to reset the logic module to the initial checkout mode before proceeding.

Checkout W7212

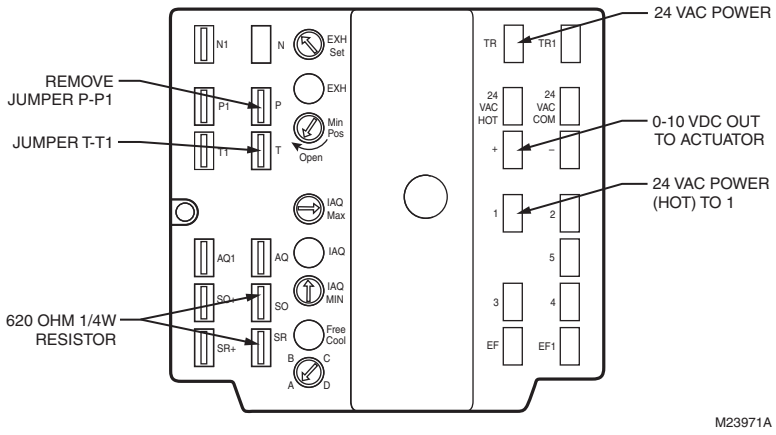

To checkout the operation of the W7212, W7213 or W7214:

1. Remove the MAT or DAT sensor from T-T1.
2. Remove the jumper from P-P1 and place it on T-T1.
3. Remove the OAT and RAT sensors from SO and SO+ and SR and SR+.
4. Place a 620 ohm resistor across SO and SO+ and a 620 ohm resistor across SR and SR+.
5. Connect the actuator to the + and -.
6. Provide 24 Vac to TR and TR1
7. Provide 24 Vac hot to terminal 1.
8. The motor will drive open.
9. Remove the 24 Vac from TR and TR1 and the motor should drive close.

If using a Honeywell DCA, the + on the logic module will be connected to 3 and does not need to be connected to – since the actuators are internally connected to ground.

If using two transformers make sure the transformers are tied to the same COM and are from the same power source.

Check out C7400 with W7459, W7210 and W7212:

You can check if the C7400 is within the RH and temperature range with the W7212 logic module using the following method.

- Make sure the sensors are all connected to the logic module.
- To check the return air C7400 sensor on Sr and Sr+: Measure the voltage across Sr and Ground.
- To check the outdoor air C7400 sensor on So and So+: Measure the voltage across So and Ground.
- You must have an accurate reading of the temperature and humidity.
- Find the line on the chart on this slide for return air C7400 sensor that corresponds to the voltage you read across Sr and ground. It should intersect with the humidity and temperature of your conditions.
- There is a ± 0.3 Vdc range for the sensor accuracy and above 90% RH the accuracy changes to ± 0.4Vdc.

The lines and chart for the So C7400 sensor are slightly different. The reason is for a differential of the sensor inputs to the logic modules for a choice between the two sensors for differential enthalpy. To assure accuracy in reading these charts, which are small, a table is provided on the following page for ease of use.

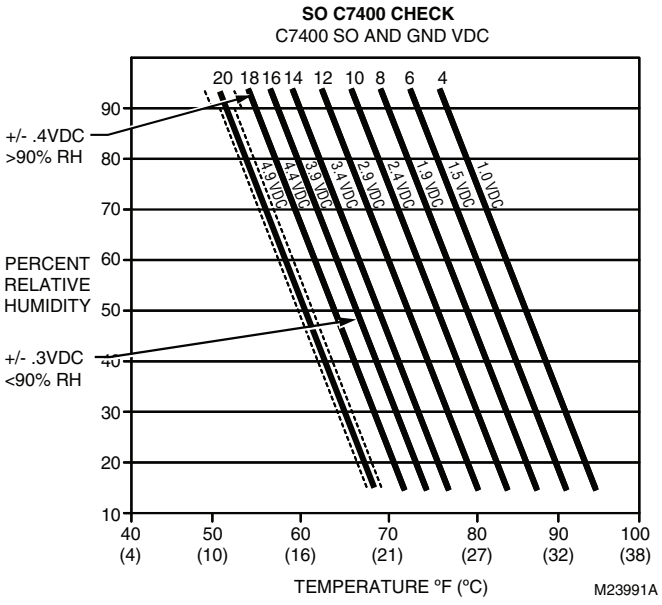

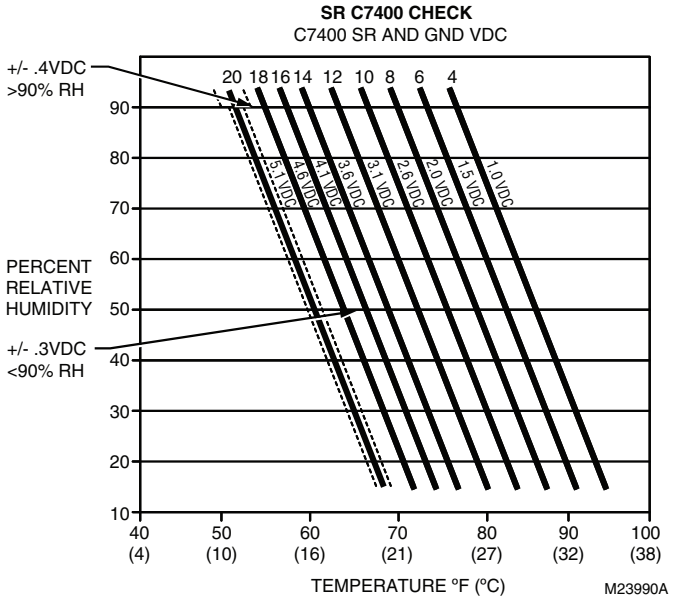

S_O	Vdc measured between SO and GND								
<90% RH									
mA curve	**4**	**6**	**8**	**10**	**12**	**14**	**16**	**18**	**20**
Low (-.3 Vdc)	0.672	1.158	1.644	2.13	2.616	3.102	3.588	4.074	4.56
Nominal	0.972	1.458	1.944	2.43	2.916	3.402	3.888	4.374	4.86
High (+.3 Vdc)	1.272	1.758	2.244	2.73	3.216	3.702	4.188	4.674	5.16
> 90% RH									
mA curve	**4**	**6**	**8**	**10**	**12**	**14**	**16**	**18**	**20**
Low (-.4 Vdc)	0.572	1.058	1.544	2.03	2.516	3.002	3.488	3.974	4.46
Nominal	0.972	1.458	1.944	2.43	2.916	3.402	3.888	4.374	4.86
High (+.4 Vdc)	1.372	1.858	2.344	2.83	3.316	3.802	4.288	4.774	5.26

S_R	Vdc measured between Sr and GND								
<90% RH									
mA curve	**4**	**6**	**8**	**10**	**12**	**14**	**16**	**18**	**20**
Low (-.3 Vdc)	0.72	1.23	1.74	2.25	2.76	3.27	3.78	4.29	4.8
Nominal	1.02	1.53	2.04	2.55	3.06	3.57	4.08	4.59	5.1
High (+.3 Vdc)	1.32	1.83	2.34	2.85	3.36	3.87	4.38	4.89	5.4
> 90% RH									
mA curve	**4**	**6**	**8**	**10**	**12**	**14**	**16**	**18**	**20**
Low (-.4 Vdc)	0.62	1.13	1.64	2.15	2.66	3.17	3.68	4.19	4.7
Nominal	1.02	1.53	2.04	2.55	3.06	3.57	4.08	4.59	5.1
High (+.4 Vdc)	1.42	1.93	2.44	2.95	3.46	3.97	4.48	4.99	5.5

NOTE: The accuracy of the sensors used to measure the temperature and humidity of the environment needs to be considered. If you are close to the measurements your C7400 sensor is probably working.

Check out for W7220 JADE™ Economizer:

Inspect all wiring connections at the economizer module's terminals and verify compliance with the installation wiring diagrams in the Installation Instructions.

To perform a checkout test:

1. Scroll to the desired test in the Checkout menu using the up and down buttons on the front of the W7220. Once you depress the enter button for CHECKOUT, the actuator will place the damper in a closed position.
2. Press the enter button to select the item.
3. "RUN?" will display on the screen.
4. Press the enter button to start the test.
5. The unit will pause and then displays "INPROGRESS" on the screen.
6. When the test is complete OR you "hear" the relays close, "DONE" appears on the screen or you can press the up arrow with circle button to go to the next test.
7. When all parameters have been tested, press the up arrow in circle button (Menu up) to end the test.

The checkout tests can be performed at the time of installation or any time during the operation of the system to determine if the system is operable.

Section 14 - Simulator for W7212

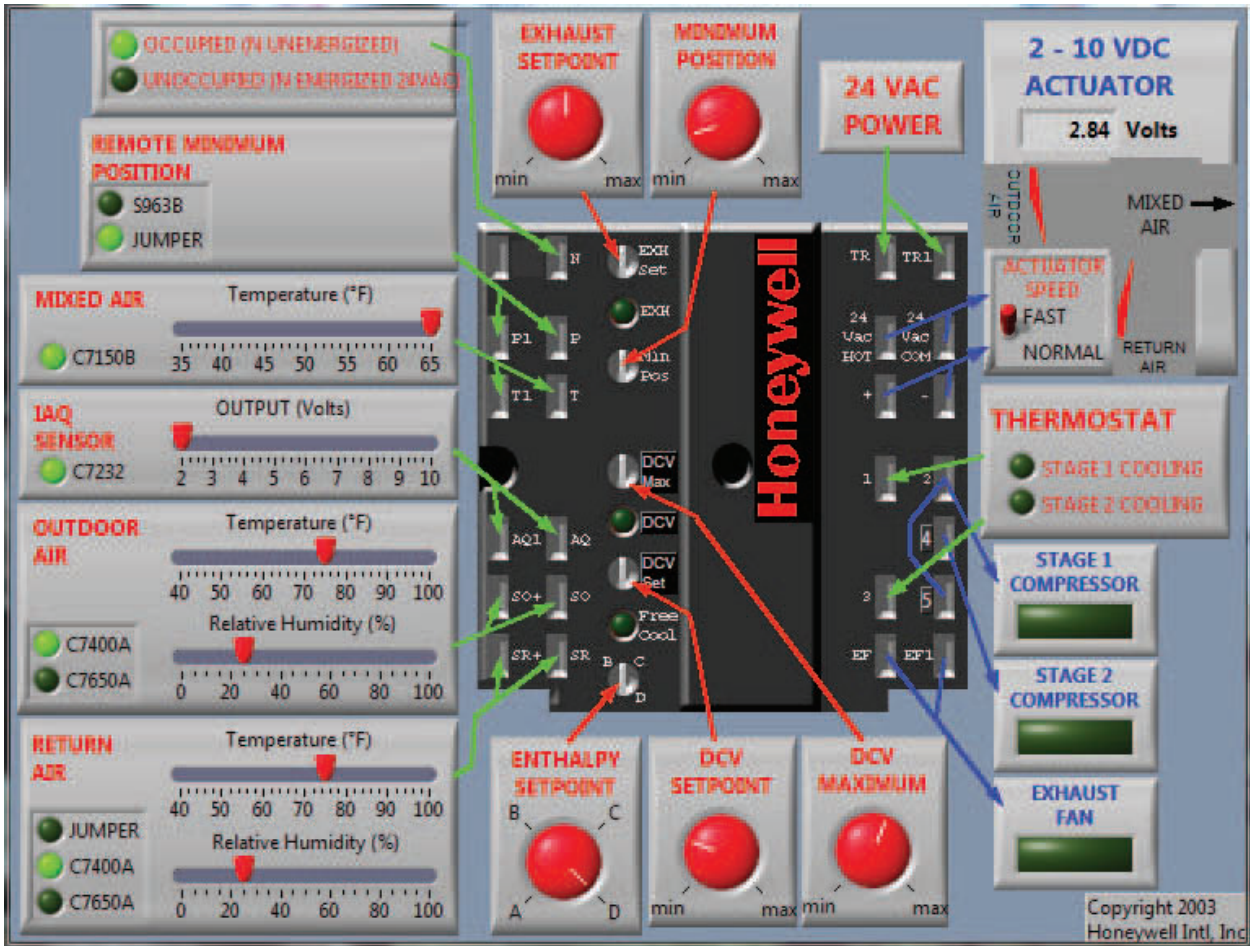

Honeywell created a simulator to help teach users how the product functions. The program is a 10.5 MB file that can be easily loaded onto your computer desk top. In addition there is a power point presentation that can also be downloaded from the same web page to guide you on how to use the simulator.

On the picture shown below all of the white arrows are inputs to the economizer logic from sensors or a commercial thermostat. All of the red arrows denote changes (potentiometers) or settings that can be made by the user. And the black arrows are out puts of the logic module to the actuator to change the damper position or to the stages of mechanical cooling equipment and exhaust fan.

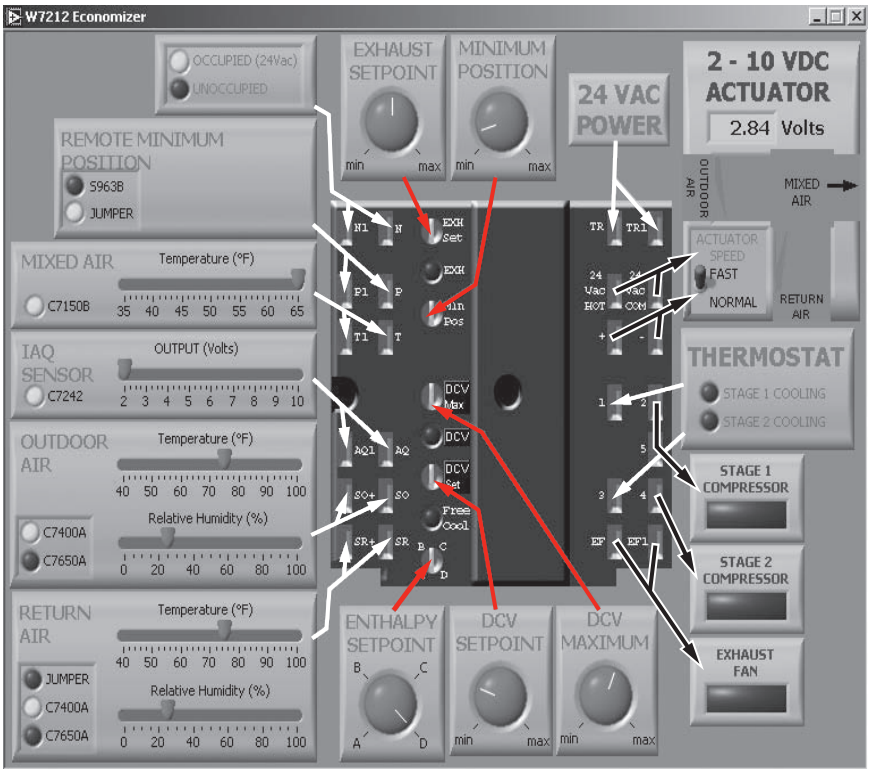

M23992A

To download the program:

Go to www.customer.honeywell.com/economizertools. The W7212 economizer simulator is the last file on the page.

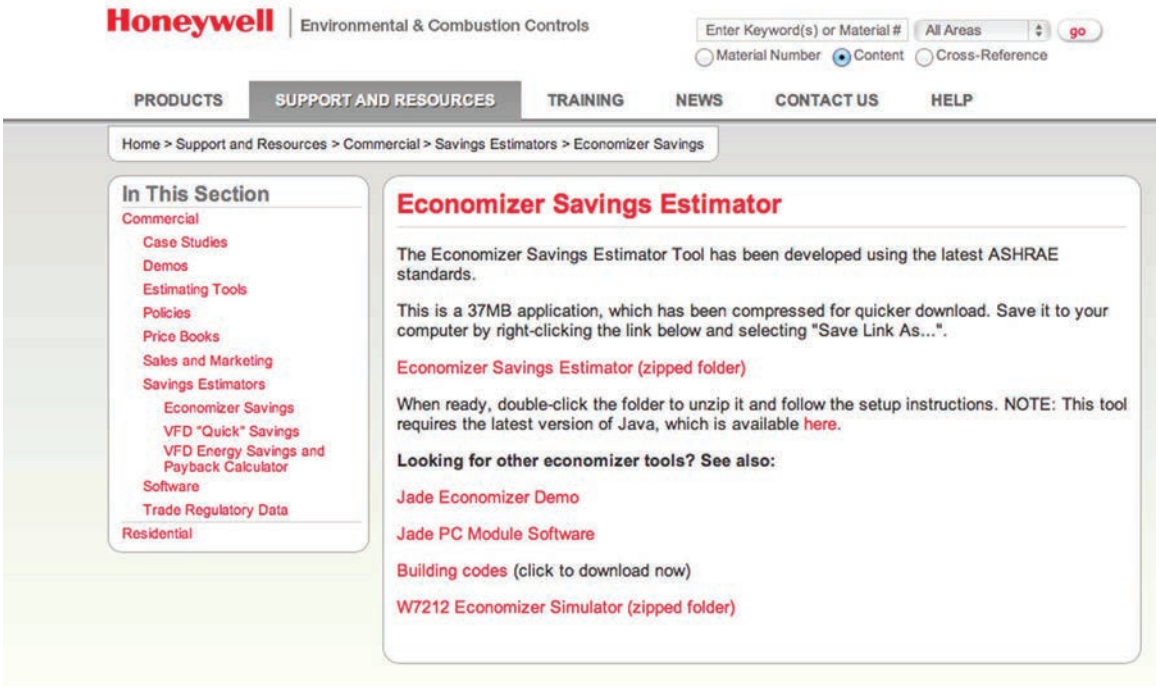

Click on it to open the zipped file. Download the LabView Runtime program then open the W7212 (Trade).exe file.

Section 14 - Simulator for W7212

Section 15 - Demo for W7220

Honeywell created a demo to help teach users how the product functions. The program is a 4.0 kB file that can be easily loaded onto your computer desk top.

The demo may not match the latest firmware version of the JADE™ controller, the demo is to be used primarily as a training tool. The JADE™ will only display the sensors or actuator functions that connected to it; the demo will show all functions available on the JADE™ controller.

To download the program you will need Adobe Air on your computer. Go to the Adobe website for a free download.

Go to www.customer.honeywell.com/economizertools.The JADE™ Economizer Demo download will appear and click on it. It requires that Adobe Flash Player be installed. An option to download Flash Player is given.

The JADE™ demo simulates the functions of the JADE™ Controller and allows the user to walk through the 6 root items on the menu and will display on the screen as they will on the LCD on the device.

The six menu items are shown in the left column of the demo, they are:

Status, Setpoints, System Setup, Advanced setup, Checkout and Alarms. The user steps through the demo just as you would on the device using the Up, Down, enter and back to root menu keys.

Also in the left column is the toggle on or off for the tool tip options where you can either hide or show the tool tips on the screen. Showing the tool tips means when you hover the pointer over the terminal labels on the demo, an explanation of the terminal function will display on the screen.

When the demo is opened, the STATUS screen will appear. To step through the items on the status menu, click on the return button. The first item "ECONO AVAIL YES" will appear on the screen under STATUS. This information is telling the operator that the current status of the economizing function is the conditions are good for economizing. In the upper right corner of the screen a down arrow appears. This means you can use the down arrow button to scroll to the next status item which is "ECONOMIZING". On this screen you will see both up and down arrows in the upper right of the screen which means you can either scroll up or down. AT the end of the STATUS menu, you can use the left button with the up arrow in a circle to go up to the root menu screen and "STATUS" will again appear. You can use the down arrow to go to the next root menu which is "SYSTEM SETUP". Note in the STATUS menu you could not change the values because JADE™ is reporting the status of the system. In the SYSTEM SETUP menu items you will see an enter arrow in front of the value which allows you to change the value of the item. For example if you want to change the units for degrees from F to C then you scroll down to the menu item UNITS DEG and click on the enter button. F will appear on the screen with an up arrow in the upper right hand of the screen. If you click on the up arrow the units change to C. Click on the enter arrow and "CHANGE STORED will appear momentarily on the screen. You have now changed all set up and status for temperature to degrees C. To change it back to F you simply go to the Units Deg item in the SYSTEM SETUP menu and change it back to F.

Using the buttons and screen you can walk through all of the functions of the JADE™. Refer to the menu tables in section 11 for description of the functions of JADE™. Follow the instruction on the web page to download the file.

Section 15 - Demo for W7220

Section 16 – Economizer Savings Estimator

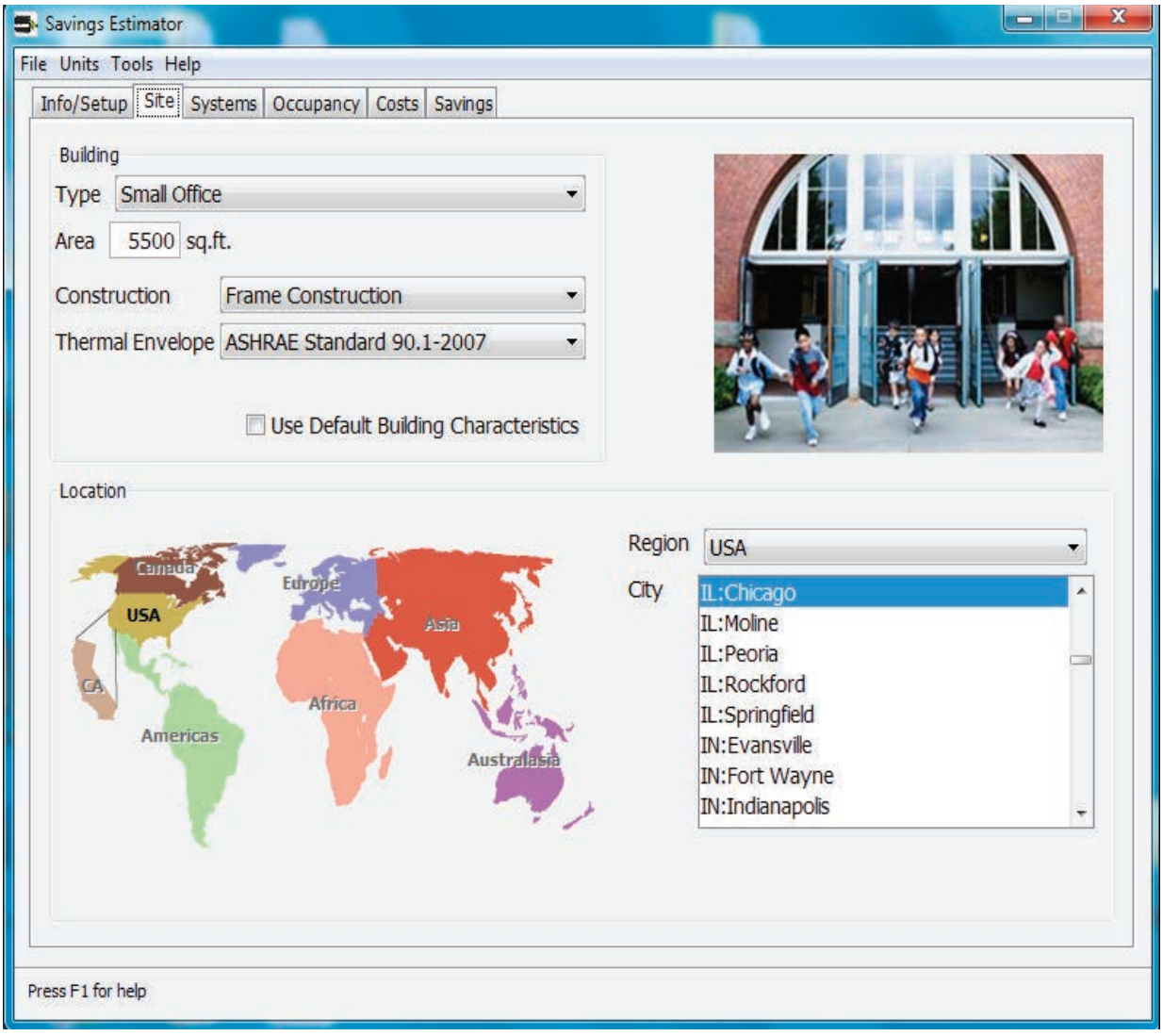

Honeywell has an easy to use savings estimation software that was designed by independent consulting Energy Engineers in 1999 and is updated every 3 or 4 years. The software allows the user to input information about the equipment on a building, type of control, occupancy schedule, cost of adding various economizer and DCV options and demand and electrical charges. With the simple click of the mouse, the software will print an estimation of the electrical and gas usage in the building and will estimate the savings and payback for the upgrade options and location the user has chosen.

You can choose the default settings for a building type or set your own occupancy schedule and control set points for the buildings.

To download the program:

Go to www.customer.honeywell.com/economizertools. The Economizer Savings Estimator download will appear (it is a zipped folder). Click on it and open it or save it. Also, the JADE™ Economizer Demo download is available at this location.

You can choose to download all weather files for the US, Canada and California climate zones or just the files you need for your region.

The savings is based on 112 years of weather data from 1900 to 2012.

Make sure you update the cost of electricity and demand charges in your region. The software will error if you do not add in the gas and electricity charges for the location.

The savings estimator evaluates the operating costs, cost savings, and payback period associated with alternate control strategies or a limited number of small prototypical commercial buildings and one residential option. The program performs hourly calculations with fairly detail models of the building and equipment in order to determine the gas energy, electrical energy, and electrical demand costs. This program is not useful as an energy audit tool for a specific building. However, it does allow the user to study the impact of the following variables:

- Climate
- Building size
- Occupancy schedule
- Utility rates
- Equipment type and efficiency
- Cost of controls

The actual costs from this program could differ significantly from those for a particular building due to differences in building specifications, equipment characterizes, specific yearly weather conditions, actual occupancy, etc. However, it is expected that the percentage cost savings associated with the alternative control strategies would be similar for similar building types.

For more detailed description of the data used to calculate the cost savings, click on the “Tools” tab at the top of the first screen of the Estimator and choose “Help”.

Section 17 - Retrofit and Upgrades

From	Upgrade to
Honeywell T7100, T7300, T7350, T7400 or competitive commercial or residential thermostats	Honeywell TB7220 or TB8220 commercial thermostats Prestige® IAQ thermostat (THX9421R5013) and EIM (THM5421R1013) OR Prestige®/EIM Y pack (YTHX9421R5051)
Economizer control systems without integration of the first stage of cooling from the commercial thermostat.	**Solid State Economizer Controller** JADE™ W7220A controller with C7250 Mixed air and C7250 Outdoor air sensor for dry bulb or C7400S enthalpy sensor. See section 11 for JADE™ information.
Economizer controls such as the W859 with temperature based remote bulb controllers as the changeover devices.	
Economizer control systems with an electromechanical enthalpy based control such as the H205 as the changeover device.	
Economizer control systems with single sensor enthalpy such as H705 or W7459.	JADE™ W7220A controller with C7250 Mixed air and C7250 Outdoor air sensor for dry bulb or C7400S enthalpy sensor. See section 11 for JADE™ information.
Economizer control systems without demand control of ventilation (DCV) or indoor air content sensors such as H705, W7459, or W6210 and W7210. Variable air volume air handlers without occupancy based demand control ventilation.	**Enhances Economizer Controller** JADE™ W7220A controller with C7250 Mixed air and C7250 Outdoor air sensor for dry bulb or C7400S enthalpy sensor. See section 11 for JADE™ information. Add a CO2 sensor for the demand control ventilation function. C7232, C7262 or C7632 carbon dioxide sensor for demand control ventilation to maximize heating and cooling season energy cost savings.

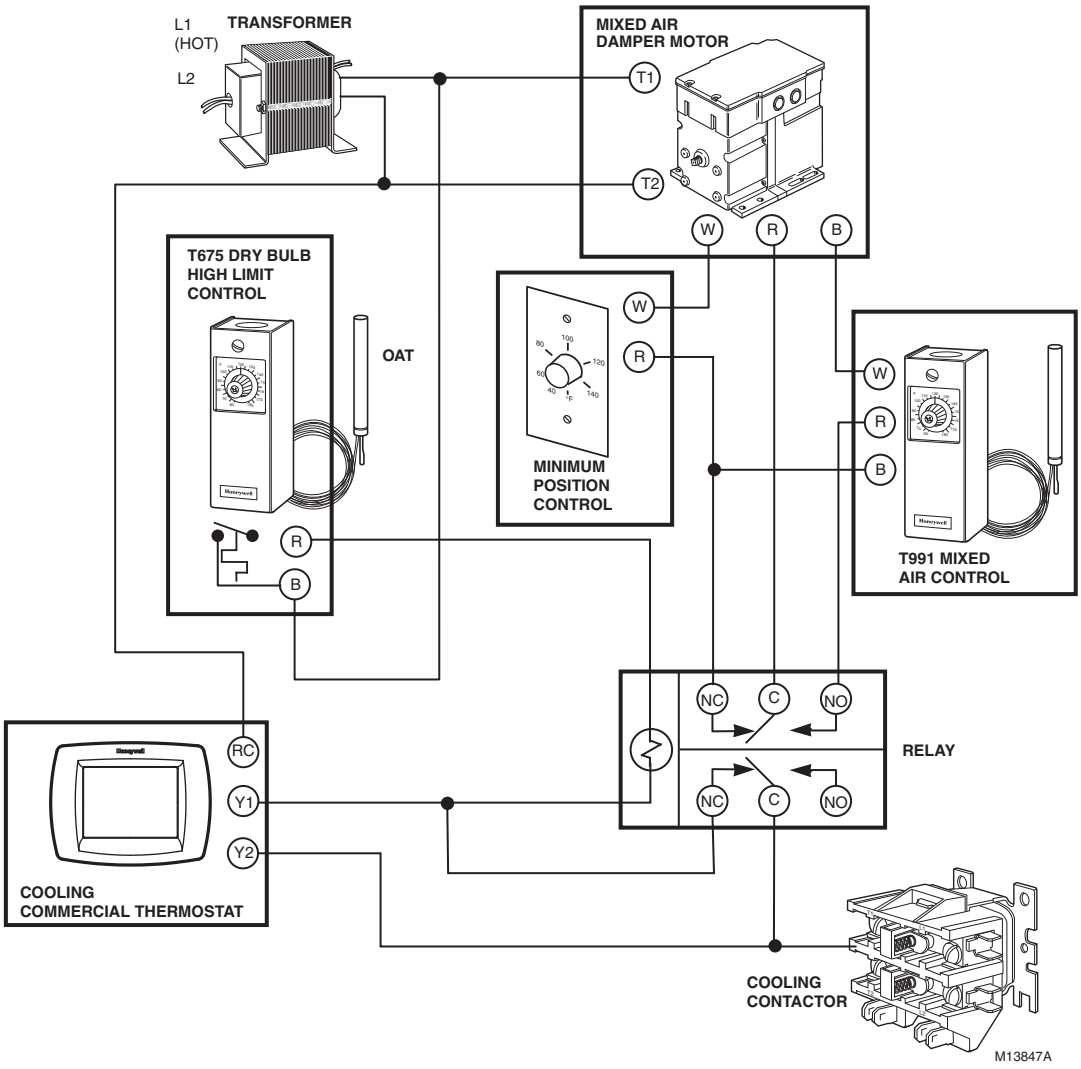

Before: Series 90 with Dry Bulb Changeover

Series 90 was widely used for fifty years as the primary form of electronic temperature control. Due to the durability of these devices there are many of them still in use on rooftop air handlers throughout the world. This is a typical configuration for a dry bulb economizer. The high limit is typically set at 70 or 75°F (21 or 24°C). A relay is used to switch the mixed air control circuit as the first stage of cooling to a minimum position when the outside air minimum position potentiometer provides ventilation by preventing full closure of the outside air dampers.

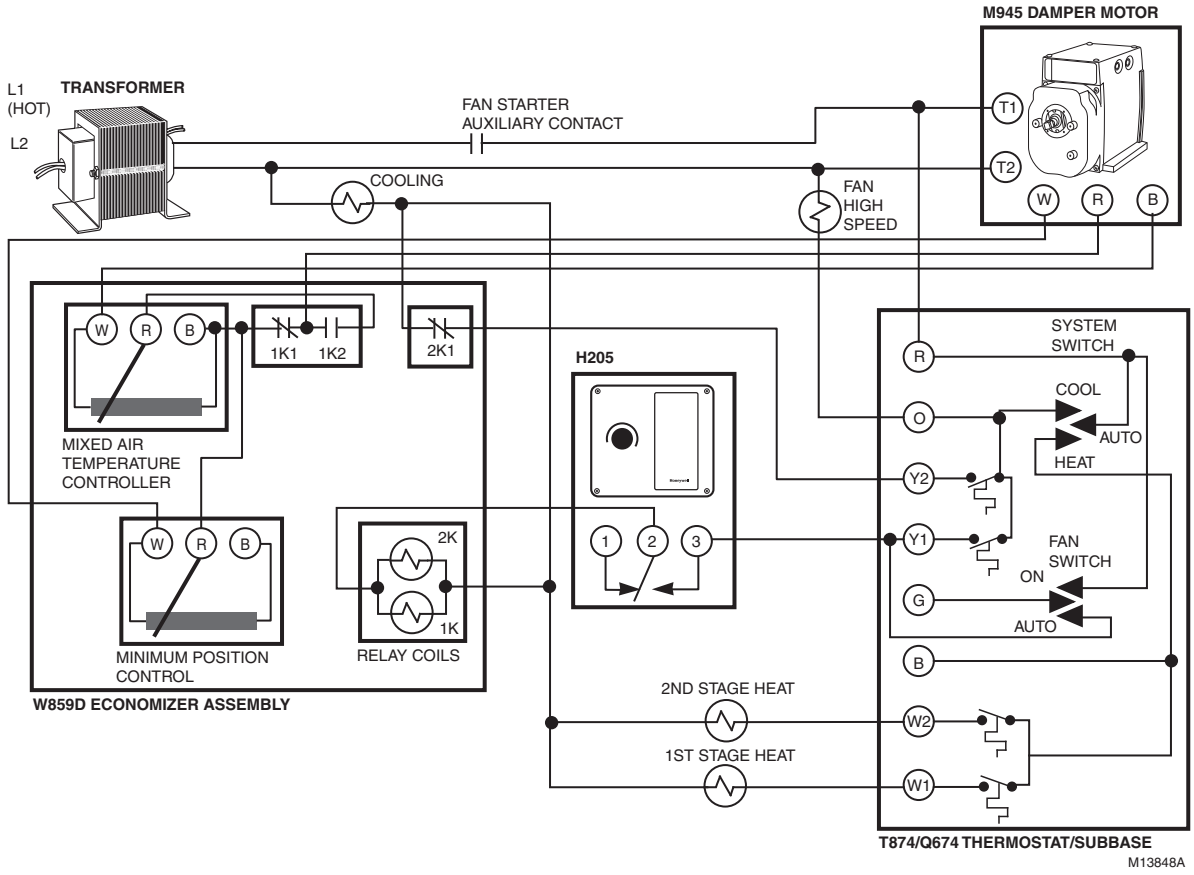

Before: W859 Economizer With H205

The W859 and W957 are combinations of multiple control devices that were designed to be installed directly on top of a Mod III or IV Honeywell damper actuator. Included was a mixed air controller, transformer, relays for high limit switchover, minimum damper position and connections for a SPST outside air high limit.

The mixed air controller capillary extended from the case of the units to the mixed air section. The setpoint for the mixed air temperature was on the case.

The outside air changeover control was added during installation and could be either dry bulb or enthalpy depending on the application. Many of these were installed on rooftop units with the schematic illustrated above using a H205 enthalpy control as the switchover device. The H205 was an electromechanical enthalpy control with a nylon humidity element.

The W859, W957 and H205 are no longer available for purchase and need to be replaced with a JADE™ controller and new Modutrol Motor.

Replace the W859 or W957 with a JADE™ controller and a M7285A1045 Modutrol motor.

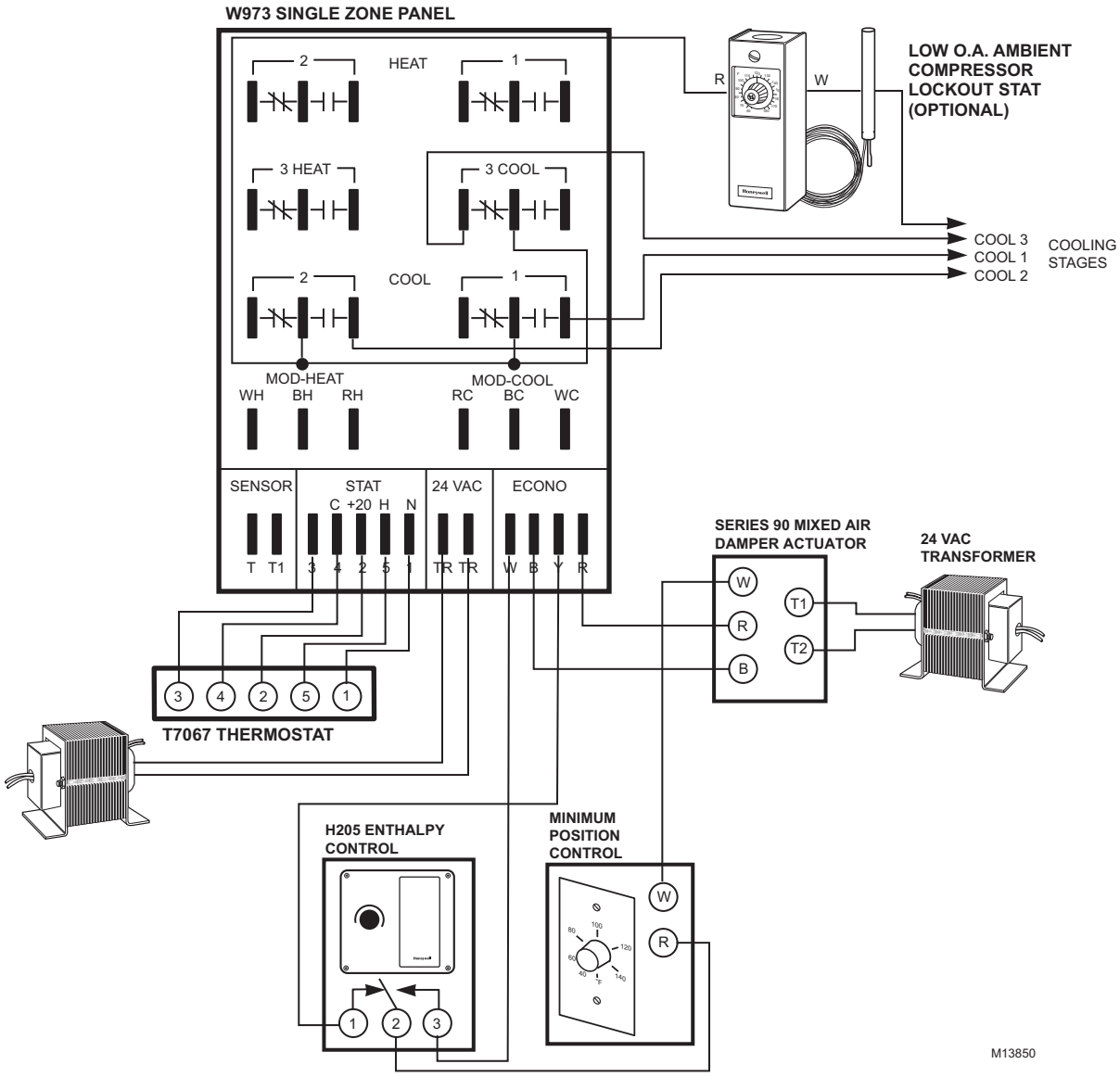

Before: W973 With H205 Control

The W973 was a sequencing panel for Single zone systems that could provide multiple modulating or two-position output stages of control plus a modulating economizer. A dry bulb high limit and a H205 enthalpy control were widely used in the economizer circuit. If they are replaced with a solid state economizer controller, the actuator for the dampers need to be replaced. In the replacement illustration on the next page a direct coupled actuator is used.

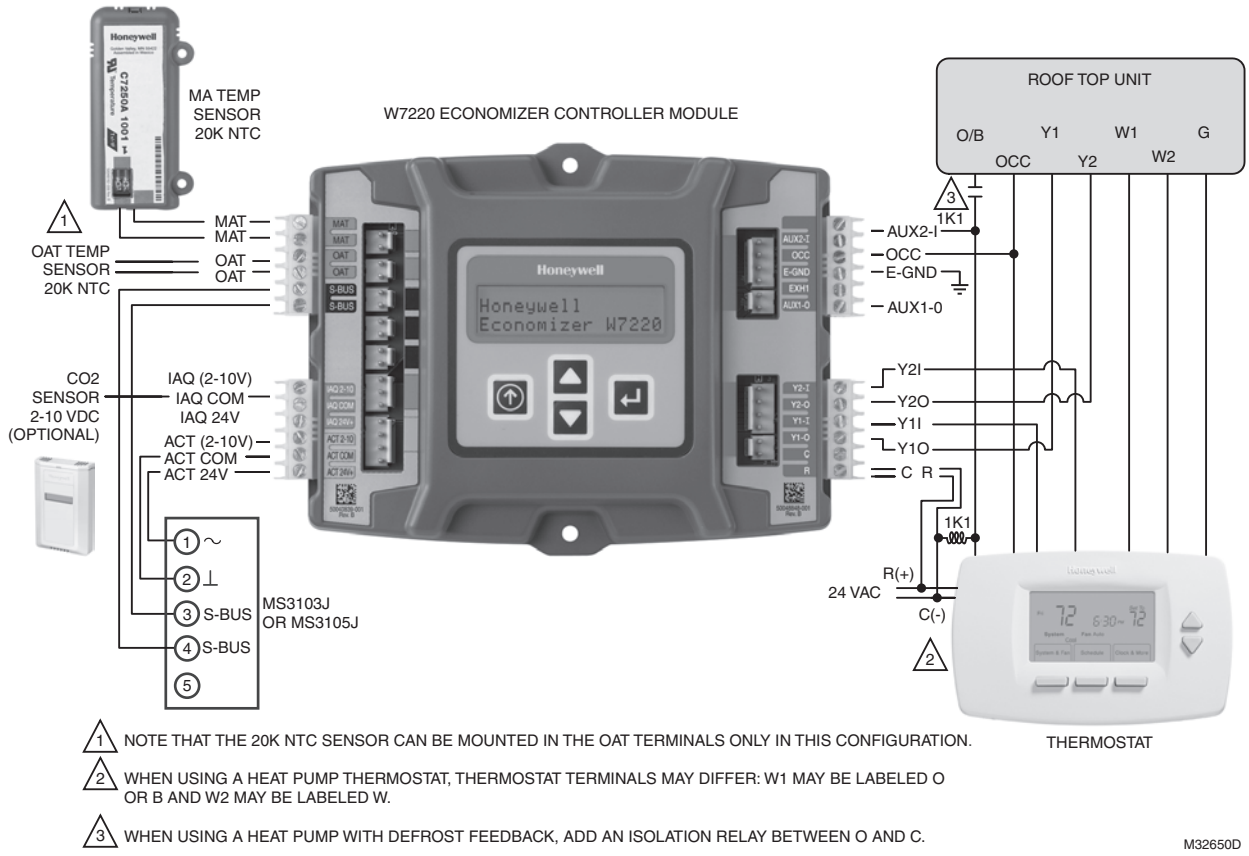

After: W973 with W7220 Economizer Module

There are many older controllers in field that may be replaced with new controllers and new economizers. Call your local distributor or the Honeywell Commercial controls hotline if you have questions that are not addressed in this application guide.

Replacement of W7459Axxx and M7415Axxx with W7220A1000 (JADE™) and M7215A1008

Step by step guide to assist you in successful replacement of the W7459 economizer and M7415 black motor with a W7220 JADE™ economizer controller and M7215 black motor:

1. Remove all wires from the W7459. Mark each wire with the terminal designation (e.g., 1,2,3,4, TR1, TR etc.) as it is removed from the W7459.
2. Remove the M7415 and using the same mounting holes mount the M7215 motor in it's place.
3. Mount JADE™ on the inside of the Rooftop unit where it will be easy to read the display and to change the settings.
4. Wire JADE™ to M7215 using three new wires and 1/4-in. quick connects on motor end of wires:

M7215 wire termination	W7220 Wire termination
TR	ACT 24V (hot)
TR1	ACT COM
IN (+)	ACT (2-10V)

5. Terminate wires removed from the W7459 to the JADE™:

W7459 wire termination	W7220 wire termination
1	Y1-In
2	Y1-Out
3	Y2-In
4	Y2-Out
5	NA
TR	R
TR1	C
N	OCC
P-P1	NA
T-T1	MAT*
So-So+	OAT or S-Bus*
Sr-Sr+	S-Bus*

* Sensor to be changed

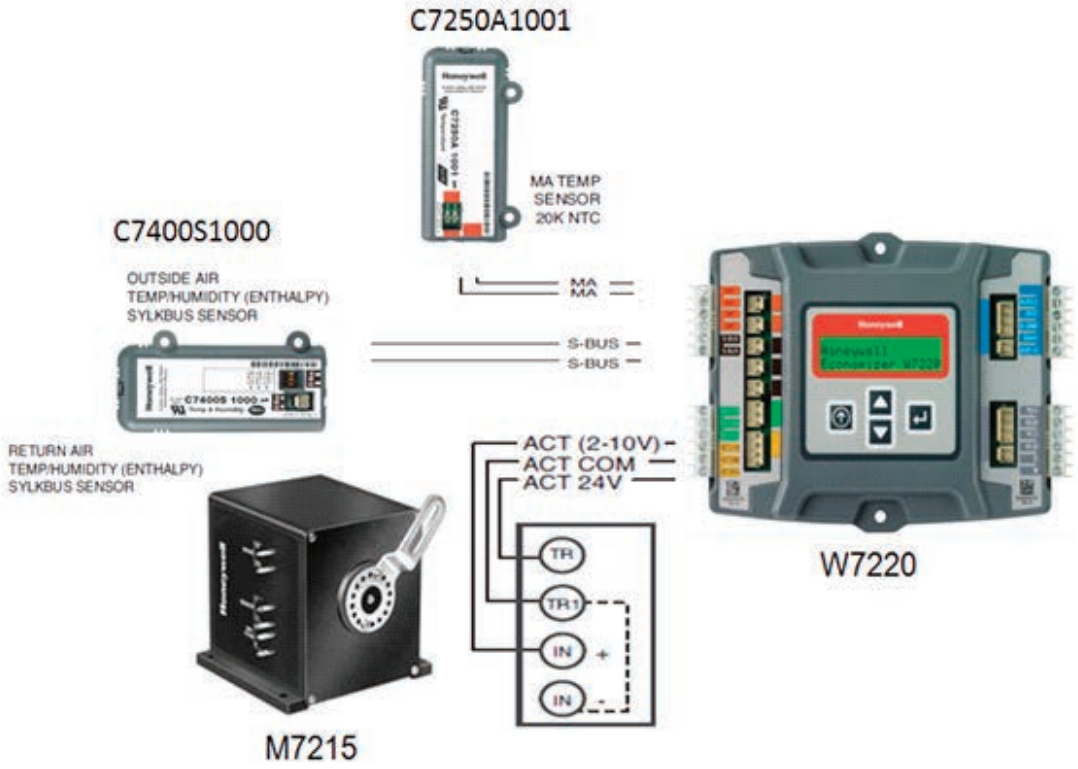

Old Sensor	Description	New Sensor
C7046A	Discharge Air	C7400S1000
C7150B	Mixed Air	C7250A1001
C7400	Solid State Enthalpy	C7400S1000
C7660	Solid State Dry Bulb	C7250A1001

There is no longer need for Minimum Position and Changeover Curve (A,B,C,D) potentiometers. The changeover curve boundaries and minimum position are set using the LCD display menu item "Setpoints" and the 4 buttons on JADE™.

For programming JADE™ refer to the Installation Instructions (62-0331) supplied with the JADE™.

Replacement of W7212Axxx with W7220A1000 (JADE™)

Step by step guide to assist you in successful replacement of the W7212 economizer with a W7220 JADE™ economizer controller:

1. Remove all wires from the W7212. Mark each wire with the terminal designation (e.g., 1,2,3,4, TR1, TR etc.) as it is removed from the W7212.
2. Mount JADE™ on the inside of the Rooftop unit where it will be easy to read the display and to change the settings.
3. Wire JADE™ to the existing M7215 motor using three new wires and ¼ in quick connects on motor end of wires:

M7215 wire termination	W7220 Wire termination
TR	ACT 24V (hot)
TR1	ACT COM
IN (+)	ACT (2-10V)

4. Terminate wires removed from the W7212 to the JADE™:

W7212 wire termination	W7220 wire termination
1	Y1-In
2	Y1-Out
3	Y2-In
4	Y2-Out
5	NA
TR	R
TR1	C
N	OCC
P-P1	NA
T-T1	MAT*
So-So+	OAT or S-Bus*
Sr-Sr+	S-Bus*
AQ-AQ1	IAQ terminals **
EF-EF1	EFH1***

* Sensor to be changed

** CO_2 sensor no longer requires a separate transformer, can be powered by JADE™

*** EFH1 out is 24 Vac, need to add a DPDTrelay between EFH1 and C terminals.

Replace the old sensors with new JADE™ sensors:

Old Sensor	Description	New Sensor	Termination on W7220
C7046A	Discharge Air	C7400S1000	S-Bus
C7150B	Mixed Air	C7250A1001	MAT
C7400	Solid State Enthalpy	C7400S1000	S-Bus
C7660	Solid State Dry Bulb	C7250A1001	OAT

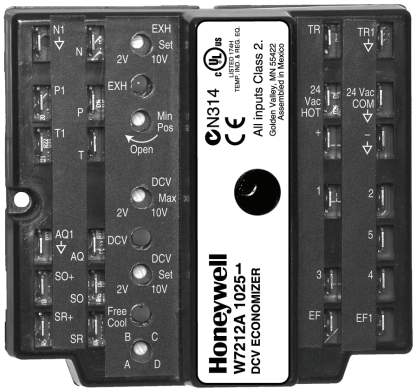

W7212

W7220

There is no longer need for Minimum Position, DCV and Changeover Curve (A, B,C,D) potentiometers.

The changeover curve, CO_2 boundaries and minimum position are set using the LCD display menu item "Setpoints" and the 4 buttons on JADE™.

For programming JADE™ refer to the Installation Instructions (62-0331) supplied with the JADE™.

Replacement of W7210Axxx with W7220A1000 (JADE™)

Step by step guide to assist you in successful replacement of the W7210 economizer with a W7220 JADE™ economizer controller:

1. Remove all wires from the W7210. Mark each wire with the terminal designation (e.g., 1,2,3,4, TR1, TR etc.) as it is removed from the W7210.
2. Mount JADE™ on the inside of the Rooftop unit where it will be easy to read the display and to change the settings.
3. Wire JADE™ to the existing M7215 motor using three new wires and ¼ in quick connects on motor end of wires:

M7215 wire termination	W7220 Wire termination
TR	ACT 24V (hot)
TR1	ACT COM
IN (+)	ACT (2-10V)

4. Terminate wires removed from the W7210 to the JADE™:

W7210 wire termination	W7220 wire termination
1	Y1-In
2	Y1-Out
3	Y2-In
4	Y2-Out
5	NA
TR	R
TR1	C
P-P1	NA
T-T1	MAT*
So-So+	OAT or S-Bus*
Sr-Sr+	S-Bus*
+	ACT (2-10V)
-	ACT COM
24 VAC HOT	ACT 24V

* Sensor to be changed

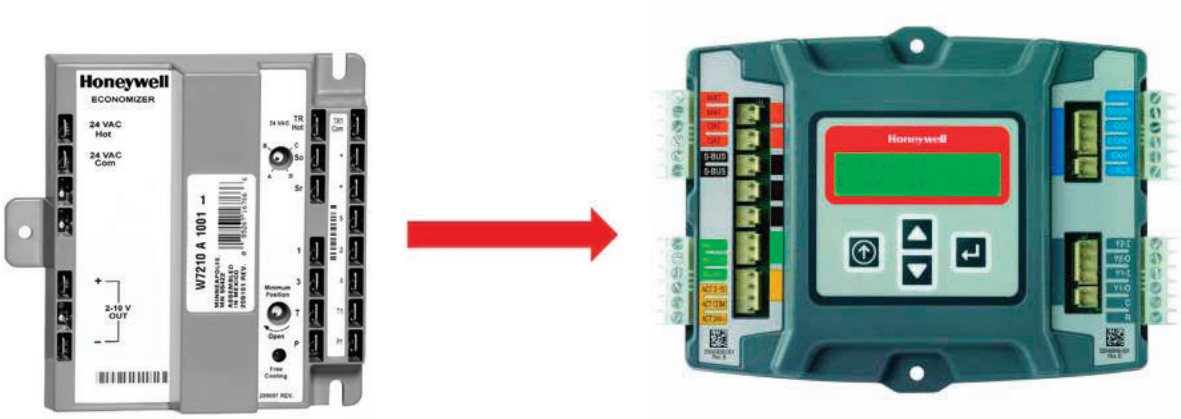

Replace the old sensors with new JADE™ sensors:

Old Sensor	Description	New Sensor	Termination on W7220
C7046A	Discharge Air	C7400S1000	S-Bus
C7150B	Mixed Air	C7250A1001	MAT
C7400	Solid State Enthalpy	C7400S1000	S-Bus
C7660	Solid State Dry Bulb	C7250A1001	OAT

There is no longer need for Minimum Position, DCV and Changeover Curve (A, B,C,D) potentiometers.

The changeover curve, CO_2 boundaries and minimum position are set using the LCD display menu item "Setpoints" and the 4 buttons on JADE™.

For programming JADE™ refer to the Installation Instructions (62-0331) supplied with the JADE™.

Replacement of W859F with W7220A1000 (JADE™) and M7285A1045

Step by step guide to assist you in successful replacement of the W859 economizer with a W7220 JADE™ economizer controller and M7285A1045 motor:

1. Remove all wires from the W859. Mark each wire with the terminal designation (e.g., H205 violet in, violet out,T1, T2 etc.) as it is removed from the W859.
2. Remove the W859 including motor and using the same mounting holes mount the M7285A1045 motor in its place.
3. Mount JADE™ on the inside of the Rooftop unit where it will be easy to read the display and to change the settings.
4. Terminate wires removed from the W859 to the JADE™:

W859F wire termination	W7220 wire termination
H205 terminal 3 = violet in	Y1-In
H205 terminal 3 = violet out	Y1-Out
H205 terminal 1 = black/blue	Y2-In
H205 terminal 1 = black/red	Y2-Out
	R (use system transformer)
	C (use system transformer)
Internal MAT	MAT*
Internal OA changeover	OAT or S-Bus*
R	ACT COM
W	ACT (2-10V)
B	Not terminated to W7220

*Sensor to be changed

1. Replace T874 thermostat with a two stage commercial programmable thermostat.
2. Add earth ground to the W7220 JADE™ controller.

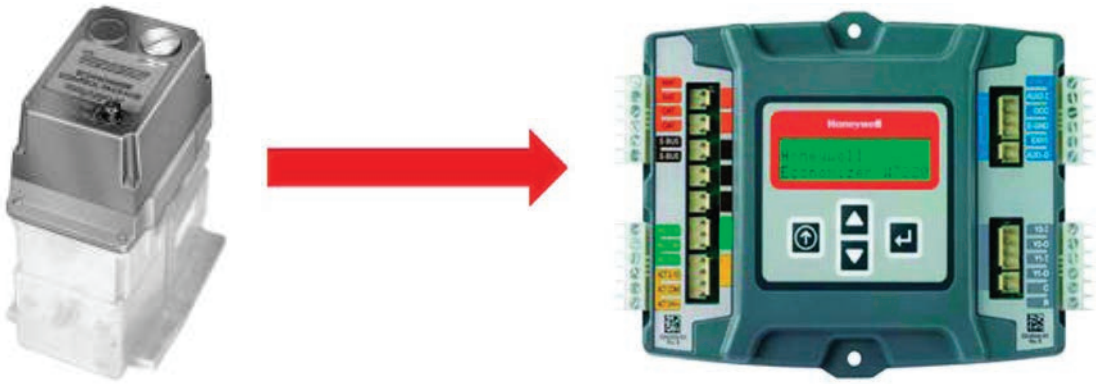

The M7285A1045 is powered with transformer connected to T1 and T2 (L1 and L2 as shown above). The MAT internal to the W859 is replaced with a C7250A1001 sensor connected to the MAT on the W7220. Add a C7400S1000 S-Bus sensor for the outdoor air changeover. Use separate transformers for the motor and for W7220. The W7220 must be earth grounded.

Old Sensor	Description	New Sensor
C7046A	Discharge Air	C7400S1000
C7150B	Mixed Air	C7250A1001
C7400	Solid State Enthalpy	C7400S1000
C7660	Solid State Dry Bulb	C7250A1001

There is no longer a need for Minimum Position and Changeover Curve (A, B, C, D) potentiometers. The changeover curve boundaries and minimum position are set using the LCD display menu item "Setpoints" and the 4 buttons on JADE™.

For programming JADE™ refer to the Installation Instructions (62-0331).

Replacement of W957G with W7220A1000 (JADE™) and M7285A1045

Step by step guide to assist you in successful replacement of the W957 economizer with a W7220 JADE™ economizer controller and M7285A1045 motor:

1. Remove all wires from the W957. Mark each wire with the terminal designation (e.g., 1,2,3,4, T0, T2 etc.) as it is removed from the W7459.
2. Remove the W957 including motor and using the same mounting holes mount the M7285A1045 motor in its place.
3. Mount JADE™ on the inside of the Rooftop unit where it will be easy to read the display and to change the settings.
4. Terminate wires removed from the W957 to the JADE™:

W957G wire termination	W7220 wire termination
1	Y1-In
2	Y1-Out
3	Y2-In
4	Y2-Out
T0 = power hot	R (use system transformer)
T2 = power common	C (use system transformer)
S1 and S2	MAT*
SR and +	RAT (S-Bus)
++ and So	OAT or S-Bus*
Z and Y	Not needed on JADE™
P1 = enthalpy curve set	Use menu, LCD and buttons to set
P2 = temperature range set	Not needed on JADE™
P3 = Calibration pot	Not needed on JADE™
P4 = throttling range pot	Not needed on JADE™
P5 = Minimum position pot	Use menu, LCD and buttons to set
R	ACT COM
W	ACT (2-10V)
B	Not terminated to W7220

* Sensor to be changed

5. Add a two stage commercial programmable thermostat.
6. Use separate transformers for the motor and for W7220. Add earth ground to the W7220 JADE™ controller.

Old Sensor	Description	New Sensor
C7046A	Discharge Air	C7400S1000
C7150B	Mixed Air	C7250A1001
C7400	Solid State Enthalpy	C7400S1000
C7660	Solid State Dry Bulb	C7250A1001

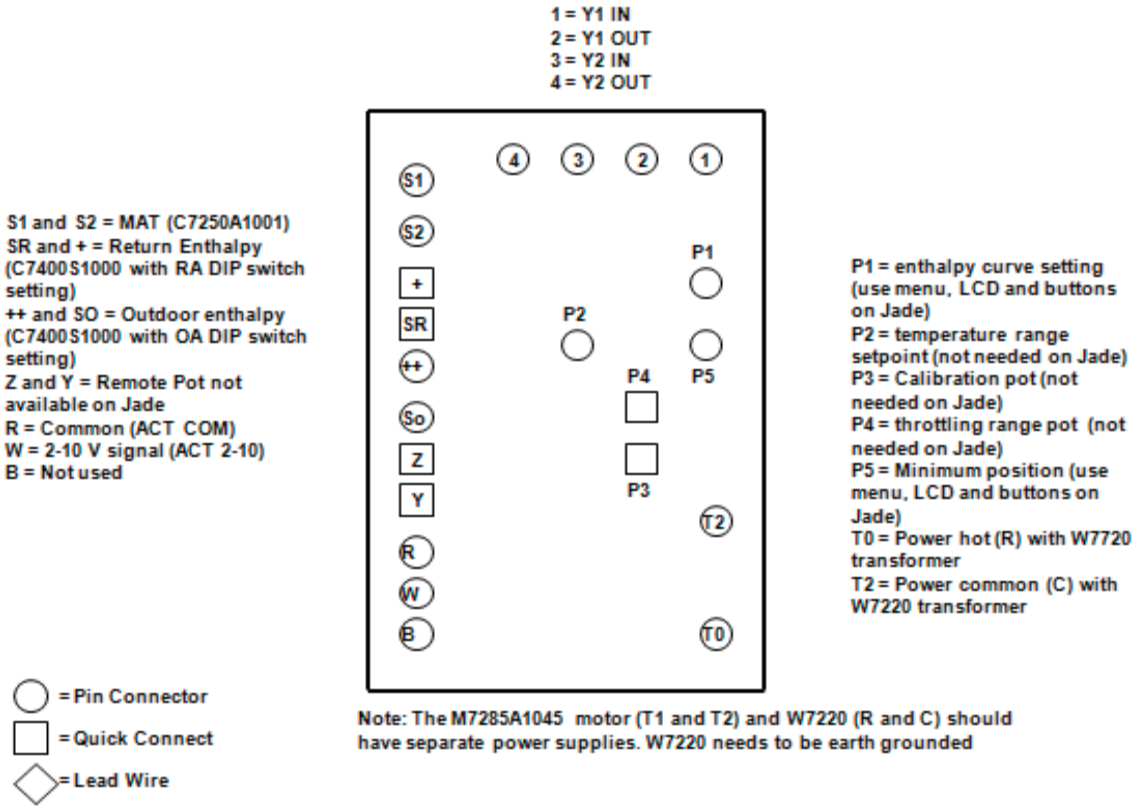

W957G Replaced with W7220 and M7285A1045 Mod Motor

There is no longer need for Minimum Position and Changeover Curve (A,B,C,D) potentiometers. The changeover curve boundaries and minimum position are set using the LCD display menu item "Setpoints" and the 4 buttons on JADE™.

For programming JADE™ refer to the Installation Instructions (62-0331) supplied with the JADE™.

Cross Reference

Any Honeywell economizer can be upgraded to use the latest economizer models with the added options of Demand Control Ventilation, exhaust fan set point or fault detection and diagnostics system shutdown. See below for cross reference and upgrade options for the economizer modules and sensors.

Sensors

Temperature

Sensor	Comments	Can be replaced with
C7046A1004	Standard with 8 in probe	
C7046A1012	OEM Carrier #HH88AW010	C7046A1004
C7046A1020	OEM York #025-22625	C7046A1004
C7046A1038	C7046A1038 has 12 inch probe	
C7046A1046	OEM Rheem with 24 inch leads	
C7150B1004	Standard 3k ohm @ 70°F	
C7150B1020	OEM Carrier 3750 @ 70°F #HH79AZ001	C7150B1004
C7150B1038	Standard 3750 @ 70°F used with W957F	C7150B1004
C7150B1046	Standard 10k @ 70°Fused with W7340	
C7660A1000	Standard	
C7660A1008	Carrier	C7660A1000
C7650A1001	Standard use only with differential dry bulb for single dry bulb use C7660A1000	
C7650A1027	OEM Carrier use only with differential dry bulb for single dry bulb use C7660A1000	C7650A1001

CO_2

Sensor	Comments	Can be replaced with
C7232A1008	Wall with display, 1 relay out with Honeywell logo	C7232A1016
C7232A1016	Wall no display, 1 relay out with Honeywell logo	C7232A1008
C7232A1024	Wall with display, 1 relay out, no Honeywell logo	C7232A1008
C7232A1032	Wall no display, 1 relay out, no Honeywell logo	C7232A1016
C7232A1057	Wall with display, 1 relay out, Honeywell logo, 220 Vac, on-off	none
C7232B1006	Duct with display, 1 relay and 1 analog out with Honeywell logo	C7232B1014
C7232B1014	Duct no display, 1 relay and 1 analog out	C7232A1008
C7232B1022	Duct with display, 1 relay and 1 analog out, no Honeywell logo	C7232B1006
C7232B1030	Duct no display, 1 relay and 1 analog out, no Honeywell logo	C7232B1014
C7262A1008	Wall with display, 1 relay and 1 analog out	C7262A1016
C7262A1016	Wall no display, 1 relay and 1 analog out	C7262A1008
C7632A1004	Wall no display, with Honeywell logo, 1 analog out	
C7632B1002	Duct no display, with Honeywell logo, 1 analog out	

Enthalpy

Sensor	Comments	Can be replaced with
C7400A1004	Standard	
C7400A1012	OEM York #10125	C7400A1004
C7400A1020	Use with H705 only	C7400A1004
C7400A1038	OEM Lennox #54G4401	C7400A1004
C7400A1046	OEM Carrier #HH57AC078A	C7400A1004
C7400A1053	OEM Bard #8602-046	C7400A1004

Economizers

Economizer	Comments	Can be replaced with
H205A	All models	W7220A1000 (JADE™) + C7250A1001 + C7400S1000 + actuator (See actuator section)
H705A	All models	W7220A1000 (JADE™) + C7250A1001 + C7400S1000 + actuator (See actuator section)
W6210A	All models	W7220A1000 (JADE™) + C7250A1001 + C7400S1000 + series 72 actuator
W6215A1008	Standard	W7220A1000 (JADE™) + C7250A1001 + C7400S1000 + series 72 actuator
W7210A	All models	W7220A1000 (JADE™) + C7250A1001 + C7400S1000 + series 72 actuator
W7212A1009	All models	W7220A1000 (JADE™) + C7250A1001 + C7400S1000
W7215A1006	All models	W7220A1000 (JADE™) + C7250A1001 + C7400S1000
W7215B1004	With outdoor IAQ	No replacement
W7299A1005	All models	W7220A1000 (JADE™) + C7250A1001 + C7400S1000 +M7215A1008
W7340A1004	OEM Trane Standard	W7340C1000
W7340A1012	With wire harness	W7340C1000
W7340A1020		W7340C1000
W7340B1002	OEM Trane #X1365108202	W7340C1000
W7340C1000	OEM Trane Standard #X1365108203	
W7345A1009	OEM Trane	W7345B1001
W7345B1001	OEM Trane Standard W7340A1004 + M7215A1016	
W7399A1004		W7399C1010

Economizer	Comments	Can be replaced with
W7399B1002		W7399C1010
W7399C1010	OEM Standard W7340C1000 + M7215A1016	
W7415A1004	OEM Trane #X13610221-02	W7220A1000 (JADE™) + C7250A1001 + C7400S1000
W7459A	All models	W7220A1000 (JADE™) + C7250A1001 + C7400S1000
W7459B1009	Use with M7405 and W7401	W7220A1000 (JADE™) + C7250A1001 + C7400S1000 +MS3103J1030
W7459C1007	Use with M8405 all models	W7220A1000 (JADE™) + C7250A1001 + C7400S1000
W7459D1005	High enthalpy limit model	W7220A1000 (JADE™) + C7250A1001 + C7400S1000
W7460A1008	Standard	W7220A1000 (JADE™) + C7250A1001 + C7400S1000 + M7215A1008
W7460B1006	With outdoor IAQ	No replacement
W7499A	All models	W7220A1000 (JADE™) + C7250A1001 + C7400S1000 + M7215A1008
W859A	All models	W7220A1000 (JADE™) + C7250A1001 + C7400S1000 + M7285A1045 Check for input voltage a transformer may be required.
W957B	All models	W7220A1000 (JADE™) + C7250A1001 + C7400S1000 + M7285A1045. Check for input voltage; a transformer may be required.

Commercial Thermostats

Commercial Thermostats	Comments	Can be replaced with
All T7300's with Q7300H	Communicating	T7350H1009
	Modulating	T7350H1017
		T7350M1008
All T7300's with Q7300A2008	Conventional or Heat Pump	T7350A1004
All T7300's with Q7300A and Q3700C	Conventional or Heat Pump	T7350B1002

Commercial Thermostats	Comments	Can be replaced with
All T7300's with non-Q7300H	Conventional or Heat Pump	T7350D1008
T7300 with Q7300A2016, Q7300A2008, Q7300C2004 and Q7300C2012	Commercial VisionPRO 8000	TB8220U1003
THX9421R5013	Prestige® IAQ thermostat when used with a W7220 Jade economizer and THM5421R1013 EIM can display the alarms on the screen	
YTHX9421R5051	Y pack including Prestige® thermostat and EIM module	THX9421R5013 +THM5421R1013

Actuators

Actuator	Comments	Can be replaced with
M7215A1008	Standard	
M7215A1016	Trane #X1365087804	M7215A1008
M7215A1024	York #8565	M7215A1008
M7215A1032	Lennox #60M1101	M7215A1008
M7415A1006	Standard	M7215A1008 for 2-10 Vdc
M7415A1014	York #7625	M7215A1008 for 2-10 Vdc
M7415A1048	Lennox #54G4601	M7215A1008 for 2-10 Vdc
MS3103J1010	Standard 27 lb-in DCA Use with W7220 (Jade) ONLY	
MS3105J3030	Standard 44 lb-in DCA Use with W7220 (Jade) ONLY	
MS7105K2030	Lennox 44 Lb-in DCA	MS7105K2046
MS7105K2038	Rheem 44 lb-in DCA	MS7105K2046
MS7105K2046	Standard 44 lb-in DCA	
MS7503A2030	Standard 27 lb-in DCA	
MS7503A2038	Kele KAS-27-M Standard 27 lb-in DCA	MS7503A2030
MS7505A2030	Standard 44 lb-in DCA	
MS7505A2038	Kele KAS-44-M Standard 44 lb-in DCA	MS7505A2030

W7220 JADE™ Y-Pack Table

Dry Bulb Changeover Y packs	Y Pack	Components
Dry Bulb with black motor	**Y7220A7215**	**Includes**
	Logic Module	W7220A1000
	OAT sensor	C7250A1001
	MAT Sensor	C7250A1001
	Black Motor	M7215A1008
Dry Bulb w/non-communicating DCA	**YL7220A7503**	
	Logic Module	W7220A1000
	OAT sensor	C7250A1001
	MAT Sensor	C7250A1001
	DCA OA	MS7503A2030
Dry Bulb w/communicating 27 lb-in DCA	**YL7220AJ3103**	
	Logic Module	W7220A1000
	OAT sensor	C7250A1001
	MAT Sensor	C7250A1001
	DCA OA	MS3103J1030
Dry Bulb w/communicating 44 lb-in DCA	**YL7220AJ3105**	
	Logic Module	W7220A1000
	OAT sensor	C7250A1001
	MAT Sensor	C7250A1001
	DCA OA	MS3105J3030
Dry Bulb w/communicating 27 lb-in DCA and CO2 wall sensor without a display	**YL7220ACW3103**	
	Logic Module	W7220A1000
	OAT sensor	C7250A1001
	MAT Sensor	C7250A1001
	DCA OA	MS3103J1030
	CO2 sensor	C7632A1004
Economizer Logic Module	Logic Module	W7220A1000
SENSORS		
Mixed Air or Outdoor Air Temperature Sensor	MAT or OAT sensor	C7250A1001
Outdoor Air Enthalpy Sensor	OAE	C7400S1000
Wall Mount CO2 sensor with fixed settings	CO2 sensor	C7632A1004
Wall Mount CO2 sensor with selectable settings	CO2 sensor	C7232A1016
Duct Mount CO2 sensor with selectable settings	CO2 sensor	C7232B1014
ACTUATORS		
Black footmounted motor	Black motor	M7215A1008
Non-communicating DCA 27 lb-in	DCA 27 lb-in	MS7503A2030
Communicating DCA 27 lb-in	DCA 27 lb-in	MS3103J1030
Communicating DCA 44 lb-in	DCA 44 lb-in	MS3105J3030

Enthalpy Changeover Y packs	Y Pack	Components
Enthalpy with black motor	**Y7220S7215**	**Includes**
	Logic Module	W7220A1000
	OAE sensor	C7400S1000
	MAT Sensor	C7250A1001
	Black Motor	M7215A1008
Enthalpy with black motor and CO2 wall sensor with a display	**Y7220SCW7215**	
	Logic Module	W7220A1000
	OAE sensor	C7400S1000
	MAT Sensor	C7250A1001
	Black Motor	M7215A1008
	CO2 Sensor	C7232A1016
Enthalpy with black motor and CO2 duct sensor with a display	**Y7220SCD7215**	
	Logic Module	W7220A1000
	OAE sensor	C7400S1000
	MAT Sensor	C7250A1001
	Black Motor	M7215A1008
	CO2 Sensor	C7232B1014
Enthalpy w/non-communicating DCA	**YL7220S7503**	
	Logic Module	W7220A1000
	OAE sensor	C7400S1000
	MAT Sensor	C7250A1001
	DCA OA	MS7503A2030
Enthalpy w/communicating 27 lb-in DCA	**YL7220SJ3103**	
	Logic Module	W7220A1000
	OAE sensor	C7400S1000
	MAT Sensor	C7250A1001
	DCA OA	MS3103J1030
Enthalpy w/communicating 44 lb-in DCA	**YL7220SJ3105**	
	Logic Module	W7220A1000
	OAE sensor	C7400S1000
	MAT Sensor	C7250A1001
	DCA OA	MS3105J3030
Enthalpy w/communicating 27 lb-in DCA and CO2 wall sensor with a display	**YL7220SCW3103**	
	Logic Module	W7220A1000
	OAE sensor	C7400S1000
	MAT Sensor	C7250A1001
	DCA OA	MS3103J1030
	CO2 Sensor	C7232A1016

Enthalpy w/communicating 27 lb-in DCA and CO2 duct sensor with a display	**YL7220SCD3103**	
	Logic Module	W7220A1000
	OAE sensor	C7400S1000
	MAT Sensor	C7250A1001
	DCA OA	MS3103J1030
	CO2 Sensor	C7232B1014

Section 18 - Appendix

Glossary

Air Content Sensor—A sensor used to measure certain components of the air in a room or other supply source. It is used as an input to adjust control sequences or parameters. Carbon Dioxide (CO_2) is frequently measured as one component of overall air quality to make adjustments to ventilation controllers.

Air Quality Standard—A government mandated regulation which specifies the maximum contaminant concentration beyond which health risks are considered to be unacceptable.

Automatic Control Loop—A set of devices that react to a change or imbalance in the controlled variable by adjusting other variables to restore the desired balance.

Balance Point—The outside air temperature value at which the cooling equipment is turned on. It is used to calculate the savings from an economizer control application.

Building-Related Illness—A diagnosable illness with identifiable symptoms whose cause can be directly attributed to airborne pollutants within a building such as Legionnaires disease or hypersensitivity pneumonitis.

Carbon Footprint—A measure of the greenhouse gases (GHG) that are produced by activities of a person, or a business that involve burning fossil fuels.

Changeover Control—The control device used to switch over from outside to return air or visa versa to make optimum use of outside air for free cooling.

Controlled Medium—The medium in which the controlled variable exists. In a room temperature control loop, the controlled variable is the space temperature and the controlled medium is the air within the room.

Controlled Variable—The quantity or condition that is measured and controlled.

Demand Control Ventilation—An energy efficiency measure to reduce outdoor air intake and the energy required to condition the outdoor air when a space is not occupied at the maximum design density.

Differential Enthalpy—The selection of a supply air source for the mixed air based on the lower enthalpy value derived from two enthalpy sensors located in the outside and return air sources.

Most Honeywell electronic enthalpy economizer modules are based on a similar setpoint configuration. The available settings A, B, C and D are for single sensor or high limit enthalpy control. For differential enthalpy the dial is turned to D.

Dilution—The reduction of airborne concentration of contaminants through an increase in outdoor air supplied to the area.

Discharge or Supply Air—Air which has been treated (heated or cooled) before being supplied to the conditioned area or room.

Economizer—Economizer controls provide “free cooling” during the cooling season by measuring the temperature or enthalpy of outside air. Outside air is used for cooling if it is sufficiently cool and dry. This reduces the usage of the mechanical cooling equipment and reduces cooling costs.

Electric Control—A control circuit that operates on line or low voltage and uses a mechanical device, such as a temperature-sensitive bellows, to perform control functions, such as actuating a switch or positioning a potentiometer. The controller signal typically operates or positions an electric actuator or may switch an electrical load directly or through a relay.

Electronic Control—A control circuit that operates on low voltage and uses solid-state components to amplify input signals and perform control functions, such as operating a relay or providing an output signal to position an actuator. The controller typically furnishes fixed control algorithms based on the circuitry inside the solid-state components.

Electromechanical Controller—A control device such as the H205 which is constructed of moving parts instead of solid state or electronic components. Typically more calibration and replacement is required of these devices than solid state controllers.

Enthalpy—A measure of the total energy content of air based upon both temperature and moisture content. When selecting air for cooling it is a better measurement than solely temperature.

Final Control Element—A device such as a valve or damper that is used to change the value of the manipulated variable. Positioned by an actuator.

Greenhouse Gas Emissions—Gases in an atmosphere that absorb and emit radiation within the thermal infrared range. This process is the fundamental cause of the greenhouse effect. The main greenhouse gases in the Earth's atmosphere are water vapor, carbon dioxide, methane, nitrous oxide, and ozone

Indoor Air Quality (IAQ)—The characteristics of the indoor climate of a building, including the gaseous composition, temperature, relative humidity, and airborne contaminants.

Integrated Economizer—An economizer control circuit that replaces the inefficient “wild” economizer by only enabling outside air for cooling when there is a call for cooling from the commercial thermostat and allowing for economizing and mechanical cooling at the same time.
.

Manipulated Variable—The quantity or condition regulated by the automatic control equipment to cause the desired change in the controlled variable.

Mixed Air—The combination of outdoor and return air prior to mechanical cooling or heating.

Modulation—A control mode with minute increments and decrements.

Non-Integrated Economizer—An economizer control that does not connect to the thermostat for call for cooling and/or turns off the economizer cycle after a set time to turn on the mechanical cooling.

Proportional Band—In a modulating controller, the control point range through which the controller output varies through a predefined range (3 to 15 PSI - 21 to 103 kPa, 2 to 10 volts, 1 to 100%). Sometimes expressed in percent of primary sensor span. Commonly used equivalents are “throttling range” and “modulating range”, usually expressed in degrees of temperature.

Sensing Element—A device or component that measures the value of a variable such as temperature or humidity.

Setpoint—The value at which the controller is set such as the desired room temperature on a commercial thermostat, the changeover point for dry bulb economizer changeover or a changeover ppm level of CO2 in a room for demand control ventilation.

Throttling Range—In a modulation controller, the control point range through which the controlled variable must pass to move the final control element through its full operating range. Expressed in values of the controlled variable such as degrees, percent relative humidity, or pressure in pounds per square inch or kPa. Also referred to as “proportional band”. For a modulating commercial thermostat, the temperature change required to drive the manipulated variable from full off to full on.

Total Heat—Same as enthalpy.

Two-Position—A basic on-off control circuit in which the device being controlled is either full on or full off with no intermediate operating positions available. Also referred to as “on-off” control.

Volatile Organic Compound (VOC)—One of a class of chemical components that contain one or more carbon atoms and are volatile at room temperature and normal atmospheric pressure. In indoor air, VOCs are generated by such sources as tobacco smoke, building products, furnishings, cleaning materials, solvents, polishes, cosmetics, deodorizers and office supplies.

'Wild Economizer'—A mixed air control circuit in which outside air is used virtually on a continuous basis whether or not there is a call for cooling or occupancy from the controlled area. This can be very inefficient in some applications and raise heating costs.

Zoning—The practice of dividing a building into sections for heating and cooling control so that one controller is sufficient to control the heating and cooling requirements for the section.

Accessories for the M74XX Series Actuators

4074EGR Crank Arm Assembly	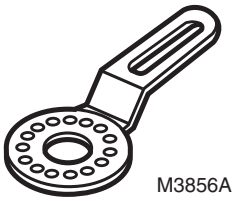 M3856A
Q298B Linkage Hardware Enables linking the actuator to an additional damper. Consists of two crank arm assemblies, two ball joint assemblies, and variable length push rods (in 10, 16, or 24 inch lengths)	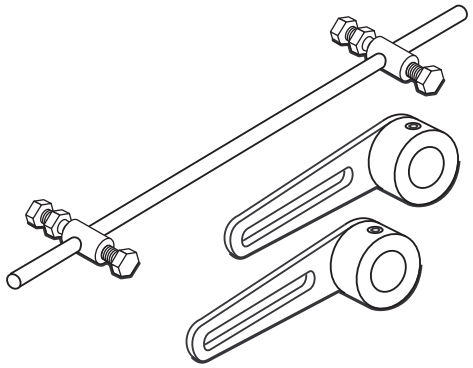 **Q298** M11546A
4074EKV Auxiliary Switch Provides switching capability for controlling auxiliary equipment. The switch acts as a function of the actuator shaft position	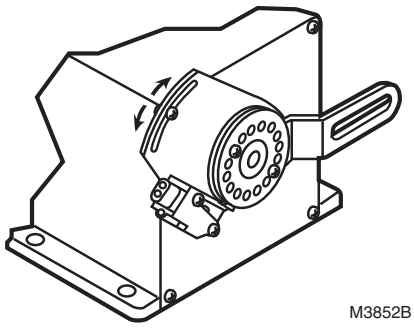 M3852B
Adapters and potentiometers are available to be installed directly on actuator or on W7459 controller.	

Accessories for the W7220 JADE™ Economizer Module

W7220 PCMOD Interface tool for JADE™ controller and Personal Computer	
Duct Mount Kit 50053060-001 Duct mounting kit for sensors	
2-pin Edge Connector for Sensors 50048926-001 2-pin edge connector for sensors (20 pieces per bag)	
6-pin Edge Connector for Field Wiring 50048926-002 6-pin edge connector for field wiring (20 pieces per bag)	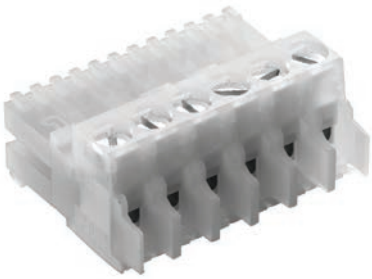

By using this Honeywell literature, you agree that Honeywell will have no liability for any damages arising out of your use or modification to, the literature. You will defend and indemnify Honeywell, its affiliates and subsidiaries, from and against any liability, cost, or damages, including attorneys' fees, arising out of, or resulting from, any modification to the literature by you.

Automation and Control Solutions
Honeywell International Inc.
1985 Douglas Drive North
Golden Valley, MN 55422
customer.honeywell.com

® U.S. Registered Trademark
© 2013 Honeywell International Inc.
63-8594—02 M.S. 05-13
Printed in United States