MicroMetl

Since 1965

Economizer
ECC-SPP**CA-DY*B-2
Install Guide

MicroMetl

Since 1965

INSTALLATION INSTRUCTIONS
Convertible Economizer
Carrier Family Small Package Products

GENERAL

IMPORTANT: Read these instructions completely before attempting to install this economizer accessory.

These instructions are intended as a general guide and do not supersede local codes in any way.

All phases of the installation must comply with all NATIONAL, STATE and LOCAL CODES.

IMPORTANT: This document is the property of the end user and is to remain with the equipment.

When ordered with controls the MicroMetl Economizer utilizes the latest technology available for integrating the use of free cooling with mechanical cooling for packaged rooftop units. The solid-state control system optimizes energy consumption, zone comfort, and equipment cycling by operating the compressor with outdoor air when free cooling is available, locking out the compressor when outdoor-air temperature is too cold and Demand Control Ventilation (DCV) is supported.

Depending on the controls options, this system can be used with single or multiple speed indoor fans.

MicroMetl Economizer's utilize gear- driven technology with a direct mount spring return actuator that will close upon loss of power. When ordering with controls, the economizer comes standard with a Mixed Air Sensor (Supply Air Sensor), and the option of outdoor Dry Bulb, outdoor Enthalpy, Differential Dry Bulb, and Differential Enthalpy Sensor. CO2 and Smoke Detection are also additional field installed options.

When ordered without controls, the MicroMetl Economizer will have a 2-10Vdc (4-20mV option) controlled actuator only. All economizer controls, including sensors, will be provided by others. No wiring schemes or controls instructions will be included with these instructions.

Barometric relief dampers are provided for natural building pressurization control.

Optional motorized relief is available for positive closure.

An optional power exhaust system is also available for applications requiring even greater exhaust capabilities. These exhaust options include Constant Volume Propeller Fan, Constant Volume Centrifugal Blower, and Variable (Modulating) Centrifugal Blower for building pressure control.

SAFETY CONSIDERATIONS

⚠ WARNING

Turn off main power to the roof top unit (RTU) or air handling unit (AHU). Lockout and tag disconnect switch before starting installation, performing service, or maintenance operations.

Electrical shock and/or moving parts could cause personal injury, or death.

CAUTION

HEAVY OBJECT

To prevent personal injury use lifting aides and proper lifting techniques when installing, removing or replacing.

CAUTION

When working on air conditioning equipment, observe precautions in literature, tags and labels attached to the unit and other safety precautions that may apply.

Installation and servicing of air conditioning equipment can be hazardous due to high pressures of hazardous gases, moving parts, electrical components, and sharp sheet metal parts. Wear safety glasses and gloves.

Only trained and qualified service personnel should install, service, or repair air conditioning equipment. Untrained personnel can perform basic maintenance functions of cleaning coils, and cleaning and replacing filters, but all other operations should be performed by trained service personnel.

MicroMetl Indianapolis
3035 N. Shadeland Ave., Suite 300
Indianapolis, IN 46226
1.800.MMC.HVAC (EST)
indycustomerservice@micrometl.com

MicroMetl Longview
201 Kodak Blvd.
Longview, TX 75602
1.903.248.4800 (CST)
longviewcustomerservice@micrometl.com

MicroMetl Sparks
905 Southern Way
Sparks, NV 89431
1.800.884.4662 (PST)
sparkscustomerservice@micrometl.com

Manufacturer reserves the right to discontinue , or change at any time, specifications, design and prices without notice and without incurring obligations.
Copyright MicroMetl Corporation 2016. All rights reserved.

Form No. IN-ECC-SPP-A

PRE- INSTALLATION

1. **Inspect Shipment for Damage** - File claim with shipping company if accessory is damaged or incomplete. Contact your supplier for any missing parts.

Important: *To eliminate any delays in shipping and to insure part(s) replacement accuracy, provide the Economizer Model Number and Production Number when ordering parts.*

2. **Check Unit Clearance** - In addition to the clearances required for the RTU, provide sufficient space for airflow clearance, wiring, and servicing this accessory after it is mounted on unit - See Submittal Data for unit dimensions and weight(s).

Exhaust/Outside Air Hood	30”
Sides	24”

INSTALLATION

Vertical and Horizontal Applications

1. Remove and set aside for future re-installation, the Control Compartment Door, Blower Door, and Compressor Access - See Fig. 1 for Panel Identification.

2. Remove Return Air Cavity/Filter Access Panel and the Horizontal Return Air Cover and discard.

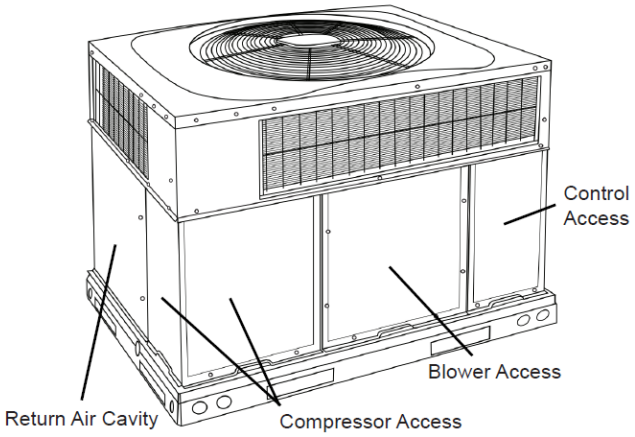

Fig 1. - Panel Identification (Not unit specific)

3. For Vertical applications, remove the bottom Return Air Duct Opening Cover, and discard. This is part of the plastic bottom of the unit. The removal of this Cover may require the use of a utility knife or saw.

4. Install the top piece of the Filter Rack in the RA Cavity next to the Evaporator Coil - See Fig. 2a, b, and c. Using the provided Tek Screws, attach the left and right sides to the coil frame.

Note: *Be careful not to insert screws where coil damage could occur.*

5. Install the bottom piece of the Filter Rack in the RA Cavity next to the Evaporator Coil - See Fig. 2a, b, and c. Using the provided Tek Screws, attach the left and right sides to the coil frame.

Note: *Be careful not to insert screws where coil damage could occur.*

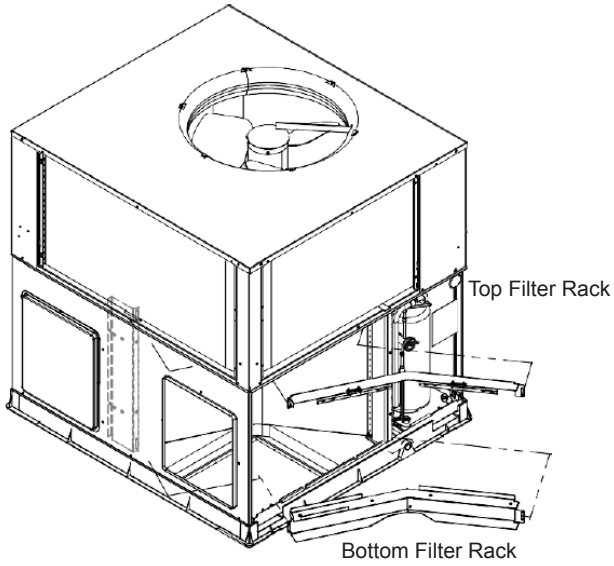

Fig 2a. Filter Rack Installation

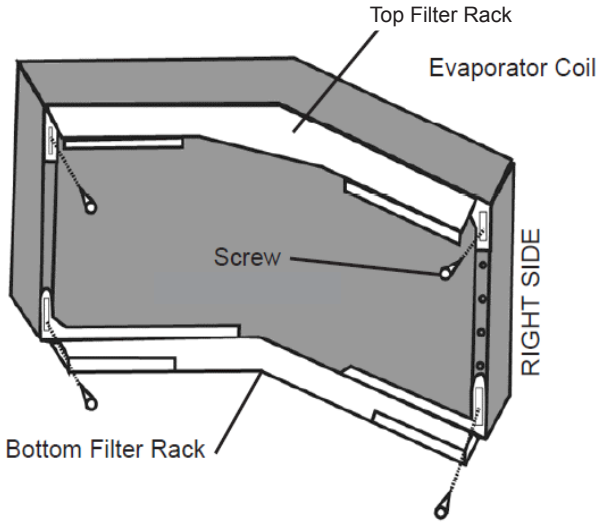

Fig. 2b - Filter Rack Installation (Bent Coil)

Manufacturer reserves the right to discontinue , or change at any time, specifications, design and prices without notice and without incurring obligations.
Copyright MicroMetl Corporation 2016. All rights reserved.

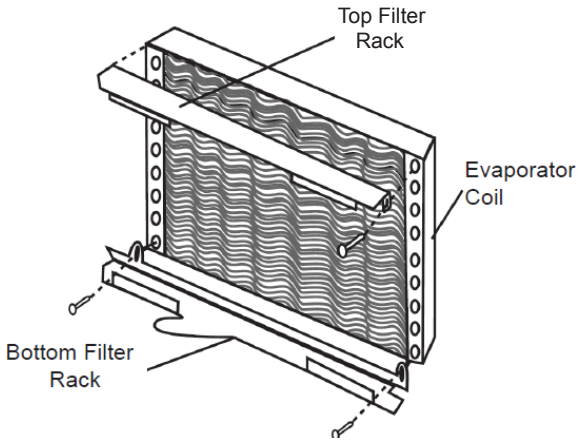

Fig. 2c - Filter Rack Installation (Straight Coil) not unit specific.

6. Once the Filter Rack is in place, insert the Economizer into the Return Air Cavity. This will require sliding it in over the Return Air Duct opening, and shifting slightly to the left. The Economizer Assembly should drop down and fit snug in place.

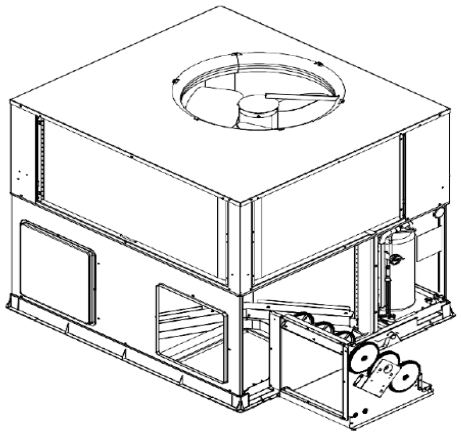

Fig 3. - Economizer Installation

7. Attach the OA Economizer Hood/Hinged Access panel to the unit by sliding the top of the panel up under the Rain Faring (below Condenser Coil) of the unit, then down into place, resting on the Base Rail. Once in place, secure with Factory screws previously removed in Step 2 and other provided screws.

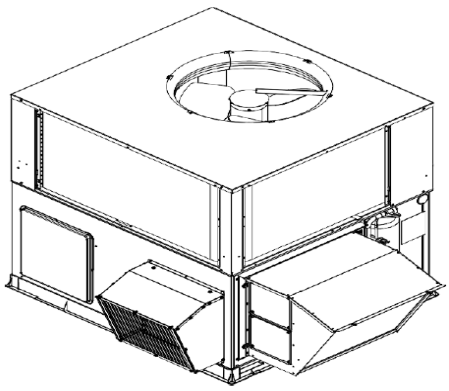

Fig 4. - Fully Assembled (Vertical Application)

8a. **Vertical (Downflow) Applications** - Fig. 4: Using the provided screws (1/2" max length), attach the Relief Hood over the Horizontal Return Air Duct opening. Line up the four screw holes in the Hood with the four holes in the RTU. Add any additional screws (1/2" max length) deemed necessary, and tap and/or caulk as necessary to ensure weather tight seal. Go to Step 9 to complete installation.

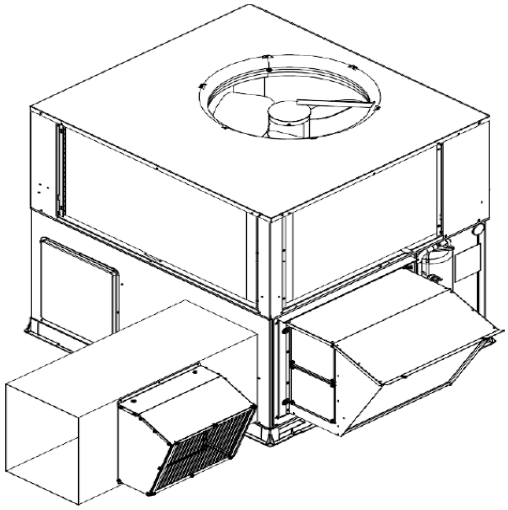

Fig 5. - Fully Assembled Horizontal Application

8b. **Horizontal Applications** - Fig - 5: Attach the Return Duct to the Horizontal Return Air opening on th side of the unit. To ensure a weather tight connection, seal/ caulk the mating surfaces as necessary.

a. Cut a hole in the Return Duct slightly smaller that the rear perimeter of the Relief Hood. Mount the Relief Hood to the Return Air Duct and attach with provided Tek screws.

b. Seal/caulk the mating surfaces as necessary.

9. Depending on the model you may need to route wires to the Control Compartment. Or you may be making connections to an existing wire harness. Choose one of the following unit options that best fits your application and follow the steps provided:

- **All Standard 3 phase Single Speed Gas/Electric, Electric/Electric Air Conditioner or Heat Pumps:**

1. Open the OA Hood/Filter Access Door.

2. Locate the RTU 12-pin plug in the upper right hand corner of the RA Cavity and remove the Jumper plug.

Note: *The jumper plug should be saved for future use in the event that the Economizer is removed from the unit. The jumper plug is not needed as long as the Economizer is installed.*

3. Attach the Adapter Plug routed across the top of the OA Damper Assembly to the RTU Plug.

4. Route the Return Air Damper Actuator/Economizer Control wires and connect - See provide Wire Diagram for details.

Manufacturer reserves the right to discontinue , or change at any time, specifications, design and prices without notice and without incurring obligations.
Copyright MicroMetl Corporation 2016. All rights reserved.

5. For Heat Pump and Occupancy Control, route the 2 additional Black and White wires through the Compressor Compartment and Blower Compartment to the Control Compartment.

6. In the RTU Control Compartment, locate the Red wire attached to the Fan Control. Remove this wire and connect it to a continuous 24Vac source. See provided Wire Diagram.

If additional wires were routed into the Control Compartment in Step 5, connect the Black wire to the Thermostat Occupancy Control. The White wire is for Heat Pump applications, only. See Wire Diagram for connection details.

7. Install the provided Mixed Air Sensor in the Blower Compartment and connect to Pink Wires. A Wire Adapter may be required to make this connection.

8. While the OA Sensor should already be connected, check to be sure it is - See Wire Diagram for details.

9. See Control Document provided with this product for Control operation and setup.

10. When controller setup is complete, re-install all access panels. Installation is complete.

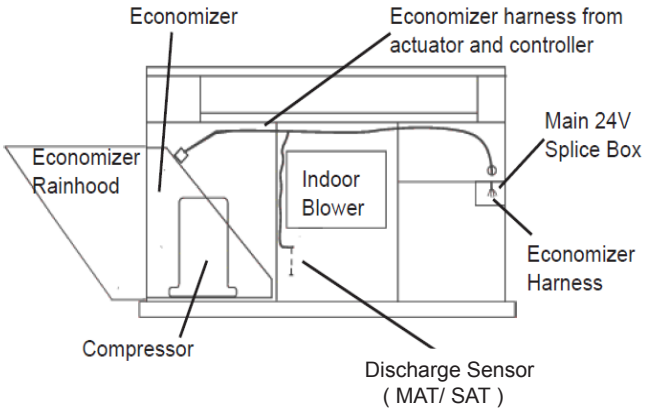

Fig 5b. - Routing Harness Extension and Mounting SAT Sensor

- **All Standard Single Phase Single Speed Gas/Electric, Electric/Electric Air Conditioner or Heat Pumps:**

1. Open the OA Hood/Filter Access Door.

2. Through the Grommet in the upper right corner of the RA Cavity, route the Optional Extension Harness (shipped as separate item) through the Compressor Compartment into the Blower Compartment.

> ***Note:*** *For Heat Pump and Occupancy Control, route the additional Black and White wires in the Adapter Harness through the Compressor Compartment and Blower Compartment to the Control Compartment. See Step 3e. and f. for wiring details.*

3. Drop the two Pink wires into the Blower Compartment for connection to the Mixed Air Sensor.

4. Continue routing the remaining wires into the Control Compartment. Make connections per the provided Wire Diagram.

   a. Locate the Black wire on the IGC @ terminal CONT (Yellow wire on the IFB @ terminal Y) and remove.
      i. Connect this to the Black wire with the Male connector form the Extension Harness.
      ii. Attach the Yellow wire from the Extension Harness to the now empty CONT or Y terminal.
   b. Connect the Gray wire to the Y2 Thermostat wire.
   c. Connect the Red wire to a continuous 24Vac source.
   d. Connect the Brown wire to the C (Common) terminal on the IFB or IGC control.
   e. If additional Black and White wires were routed into the RTU Control Compartment, connect the Black wire to the Thermostat Occupancy Control. The White wire is for Heat Pump applications, only. See Wire Diagram for connection details.

5. Install the Mixed Air Sensor in the Blower Compartment and connect the two Pink wires. A Wire Adapter may be required to make this connection.

6. Route the Return Air Damper Actuator/Economizer Control wires and connect - See Wire Diagram for details.

7. While the OA Sensor should already be connected, check to be sure it is - See Wire Diagram for details.

8. See Control Document provided with this product for Control operation and setup.

9. When controller setup is complete, re-install all access panels. Installation is complete.

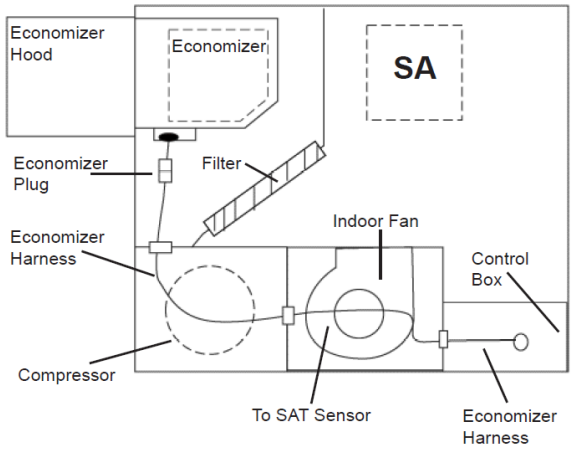

Fig 5a. - Routing Harness (Top View)

- **All High Efficient 2-Speed Fan Air Conditioner or Heat Pump and Dual Fuel** (Single or 3 Phase)**:**

1. Open the OA Hood/Filter Access Door.

2. Through the Grommet in the upper right corner of the RA Cavity, route the Main Wire Harness (rolled up in the OA Hood Control

Manufacturer reserves the right to discontinue , or change at any time, specifications, design and prices without notice and without incurring obligations.
Copyright MicroMetl Corporation 2016. All rights reserved.

Compartment) through the Compressor Compartment into the Blower Compartment.

3. Drop the 2 Pink wires into the Blower Compartment for connection to the Mixed Air Sensor.

4. Continue routing the remaining wires into the Control Compartment. Make connections per the provided Wire Diagram.

a. All Gas Heat (non-Dual Fuel) systems:

i. Disconnect wire (Yellow or Black - Depends on model) at terminal CONT on Integrated Gas Control (IGC).
ii. Connect the Yellow wire previously removed from the IGC to the Economizer Harness Gray wire (Y1-O) with the insulated Male Connector.
iii. Connect the Yellow wire (Y1-I) from the Economizer Harness with the Insulated Female Connector to the now empty CONT terminal on the IGC.
iv. Go to Step e. to finish installation.

b. All Electric Heat/Cool:

i. Remove the Blue wire at terminal Y (output to compressor via LPS/HPS) on Integrated Fan Board (IFB).
ii. Connect the Blue wire previously removed from the IFB to the Economizer Harness Black wire (Y1-O) with the Insulated Male Connector.
iii. Connect the Yellow wire (Y1-I) from the Economizer Harness with the Insulated Female Connector to the now empty Y terminal on the IFB.
iv. Go to Step e to finish installation.

c. All Dual Fuel systems:

i. Disconnect Yellow wire at terminal CONT on Integrated Gas Control (IGC).
ii. Install HP Isolation Relay in a convenient location. This may be in the Blower Compartment if the real estate in the Control Compartment is occupied.
iii. Follow provided Wire Diagram for Relay hookup.
ix. Go to Step e to finish installation.

d. All Heat Pump (non- Dual Fuel) systems:

i. Break the connection in the Yellow wire between IFB (P2) and DB (P1).
ii. Install HP Isolation Relay in a convenient location. This may be in the Blower Compartment if the real estate in the Control Compartment is occupied.
iii. Follow provided Wire Diagram for Relay hookup.

e. Route remaining wire into the Low Voltage Box (lower right corner) for connection to thermostat wiring, as follows.
i. Connect Brown wire with Brown on Unit and C (common) of thermostat (color of choice).
ii. Connect Red wire with Red on Unit and R of thermostat (typically red).
iii. Connect Blue wire with Unit Pink and Y2 of thermostat (color of choice).
iv. Connect White to White of Unit and W1 of thermostat (typically white).
Note: *If this is a Heat Pump, connect White to Black of Unit and W2 of thermostat (color of choice).*
vi. Connect all other thermostat wires as required
1. T'stat Y1 (Yellow) to unit Y1 (Yellow).
2. T'stat G (Green) to unit G (Green).
3. T'stat W2 (color of choice) to unit W2 (could be Black or Violet). See unit diagram for color).
4. T'stat Occupancy output to Economizer Black. See Wire Diagram for details.

5. See Control Document provided with this product for Control operation and setup.

6. When controller setup is complete, re-install all access panels. Installation is complete.

MicroMetl Indianapolis
3035 N. Shadeland Ave., Suite 300
Indianapolis, IN 46226
1.800.MMC.HVAC (EST)
indycustomerservice@micrometl.com

MicroMetl Longview
201 Kodak Blvd.
Longview, TX 75602
1.903.248.4800 (CST)
longviewcustomerservice@micrometl.com

MicroMetl Sparks
905 Southern Way
Sparks, NV 89431
1.800.884.4662 (PST)
sparkscustomerservice@micrometl.com

Manufacturer reserves the right to discontinue , or change at any time, specifications, design and prices without notice and without incurring obligations.
Copyright MicroMetl Corporation 2016. All rights reserved.

Form No. IN-ECC-SPP-A

GENERAL

IMPORTANT: Read these instructions completely before attempting to install this economizer accessory.

These instructions are intended as a general guide and do not supersede local codes in any way.

All phases of the installation must comply with all NATIONAL, STATE and LOCAL CODES.

IMPORTANT: This document is the property of the end user and is to remain with the equipment.

When ordered with controls the MicroMetl Economizer/Mixing Box utilizes the latest technology available for integrating the use of free cooling with mechanical cooling for packaged rooftop units and air handlers. The solid-state control system optimizes energy consumption, zone comfort, and equipment cycling by operating the compressors when the outdoor-air temperature is too warm, integrating the compressor with outdoor air when free cooling is available, locking out the compressor when outdoor-air temperature is too cold and Demand Control Ventilation (DCV) is supported.

Depending on the controls options, this system can be used with single or multiple speed indoor fans.

The Belimo ZIP™ Economizer System is an expandable economizer control system, which includes an ECON-ZIP-BASE Economizer Module (controller) with an LCD and keypad.

The ECON-ZIP-BASE Economizer Module can be used as a standalone economizer module wired directly to a commercial set back space thermostat to provide Outdoor Air Dry Bulb control.

The ECON-ZIP-BASE Economizer Module can also be connected to an optional Return Air (RA) Dry Bulb sensor for Differential Dry Bulb control, or Enthalpy sensors for Single or Differential Enthalpy control.

The ECON-ZIP-BASE Economizer Module automatically detects sensors by polling to determine which sensors are present. If a sensor loses communications after it has been detected, the ECON-ZIP-BASE Economizer indicates a Device Fail Error on its LCD.

With an Energy Module and Communication Module the ECON-ZIP-BASE can be expanded for additional functions.

For further information on mounting and operation, refer to Belimo Installation and Operations Manual.

SAFETY CONSIDERATIONS

⚠ WARNING

Turn off main power to the roof top unit (RTU) or air handling unit (AHU). Lockout and tag disconnect switch before starting installation, performing service, or maintenance operations.

Electrical shock and/or moving parts could cause personal injury, or death.

CAUTION

When working on air conditioning equipment, observe precautions in literature, tags and labels attached to the unit and other safety precautions that may apply.

Installation and servicing of air conditioning equipment can be hazardous due to high pressures of hazardous gases, moving parts, electrical components, and sharp sheet metal parts. Wear safety glasses and gloves.

Only trained and qualified service personnel should install, service, or repair air conditioning equipment. Untrained personnel can perform basic maintenance functions of cleaning coils, and cleaning and replacing filters, but all other operations should be performed by trained service personnel.

Manufacturer reserves the right to discontinue , or change at any time, specifications. design and prices without notice and without incurring obligations.
Copyright MicroMetl Corporation 2017. All rights reserved.

ECON-ZIP-BASE - ZIP Economizer Base Unit

The ZIP Economizer™ System is a modular designed, plug and play economizer control solution. The ZIP offers an extended temperature transflective LCD display, with on board help, providing information every step of the way. Through its superior Fault Detection and Diagnostics (FDD), it troubleshoots faults, initiates alarms, and reconfigures for best operation. Up to 10 alarms are stored as historic alarms and with operating hours, and makes troubleshooting and maintenance easier. The ZIP Economizer™ Base Unit is designed to provide the most common economizer functions; two stages of mechanical cooling, integrated cooling, four change over strategies for free cooling, indoor fan speed and ventilation damper position feedback. See Fig.1



Fig. 1 ECON-ZIP-BASE

ECON-ZIP-EM - ZIP Economizer Energy Module

The ZIP Economizer™ Energy Module provides additional I/Os to offer higher control functionalities that will save even more energy. The Energy Module is needed for demand control ventilation, (DCV) indoor fan 2-speed control, power exhaust fan, remote override for damper positioning, and pre-occupancy purge. The auto-detection and plug and play capability offers quick set up. See Fig.2



Fig. 2 ECON-ZIP-EM

ECON-ZIP-COM - ZIP Economizer Communication Module

The ZIP Economizer™ Communication Module provides remote alarm indication with future capabilities such as data trending and building automation integration. See Fig.3



Fig. 3 ECON-ZIP-COM

9901-1619 - Temperature Sensor

The 9901-1619 Temperature Sensor allows for reliable air temperature readings. The sensor may be used for outdoor air (OAT), return air (RAT), or supply air (SAT) /mixed air (MAT) temperature measurements and control, with no configuration required. A minimum of one SAT and one OAT sensor is required for the ZIP Economizer to function. An RAT sensor can be added for Differential Temperature Changeover Strategy. For best control results, sensors should be placed in the air stream. With the T-Bracket, mounting is universal and can be inserted through the ductwork, fan housing or surface mounted. See Fig.4



Fig. 4 9901-1619 (Typical)

ECON-ZIP-TH - ZIP Economizer Temperature and Humidity Sensor

The ECON-ZIP-TH Sensor may be used to measure temperature and humidity in the outdoor or return air stream. The temperature and humidity output is via two analog channels that can be independently measured with a multi-meter. One sensor is used in the outdoor air intake for Single Enthalpy Changeover Strategy.

An additional sensor can be added in the return air stream for Differential Changeover Strategy. When using the ECON-ZIP-TH it is not necessary to use a separate temperature sensor (9901-1619) for OAT or RAT. See Fig.5



Fig. 5 ECON-ZIP-TH

Manufacturer reserves the right to discontinue , or change at any time, specifications. design and prices without notice and without incurring obligations.
Copyright MicroMetl Corporation 2017. All rights reserved.

PRE-INSTALLATION

When Installing This Product:

- Read these instructions carefully. Failure to do so could damage the product or cause a hazardous condition.
- Check ratings given in instructions and on the product to ensure the product is suitable for your application.
- After installation is complete, see product operation as provided in these instructions. See page 10.

Mounting:

Econ-ZIP-BASE

You can mount the ZIP Economizer Control Logic in any orientation; however, it is recommended that you mount it in a position that will allow full utilization of the LCD and key pad and proper clearance for installation, servicing, wiring, and removal.

9901-1619 (Temperature Sensor)

- For Mixed Air Temperature (MAT – aka Discharge or Supply Air) use mounting location specified per the mixing box or economizer instructions.
- For optional Outside Air Temperature (OAT) (Dry-bulb) Strategy mount in OA section per the mixing box or economizer instructions.
- For optional Differential/Comparative (dry-bulb) Temperature Strategy mount in the RA duct per the mixing box or economizer instructions. Mount the sensor in a position that will allow for proper clearance for installation, servicing, wiring, and removal.

ECON-ZIP-TH

- For optional OA Enthalpy Strategy mount in OA section per the mixing box or economizer instructions.
- For optional Differential/Comparative Enthalpy Strategy mount in RA duct per the mixing box or economizer instructions. Mount the sensor in a position that will allow for proper clearance for installation, servicing, wiring, and removal.

INSTALLATION

1. Disconnect power to RTU before beginning installation.

2. Note orientation, opening rotation, and spring return rotation of damper assembly - i.e., Outside Air Damper should be open and Return Damper should be closed.

3. Terminate required Inputs and Outputs (I/O): For the ZIP Economizer to function correctly, the following I/O, at a minimum, are required to be terminated, wired, and functioning (R, C, Y1, Y2, G, CC1, OAT, SAT, ACT1, ACT2, ACT3, ACT5). See Wire Diagram for details.

4. Sensor configuration: The ZIP Economizer automatically detects sensors attached and automatically configures for Single Dry Bulb, Single Enthalpy, Differential Dry Bulb and Differential Enthalpy.

5. Option: If DCV and/or Power Exhaust is required, the ECON-ZIP-EM must be installed. Each ZIP Economizer module is designed with a unique form fit which allows it to fit only in one location on the ECON-ZIP-BASE. Insert the ECON-ZIP-EM module in the center designated slot of the ZIP Economizer base unit. See Fig. 6



Fig.6 ECON-ZIP-BASE with ECON-ZIP-EM

Manufacturer reserves the right to discontinue , or change at any time, specifications. design and prices without notice and without incurring obligations.
Copyright MicroMetl Corporation 2017. All rights reserved.

Demand Controlled Ventilation

Before Getting Started:

ECON-ZIP-EM and CO_2 sensor can be added during or after initial set up.

1. A CO_2 sensor is needed with the following characteristics: Output that is 0-10 VDC Range of 0-2000ppm

Type of Output	Ventilation Rate (cfm/Person)	Analog Output	CO_2 Control Range (ppm)
Proportional	Any	0-10V	0-2000

2. Attach the Energy Module ECON-ZIP-EM to the ZIP Economizer ECON-ZIP-BASE. See Fig. 6

3. Wiring CO_2 Sensor to ZIP Economizer- See Fig. 7a and 7b.

a. Wire CO_2 sensor 0-10 VDC output to ECON-ZIP-EM CO_2 sensor input.

b. Wire CO_2 sensor power.

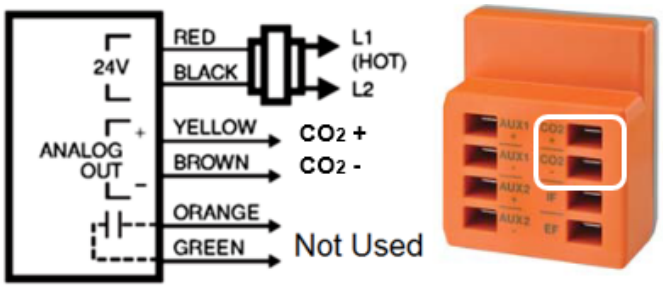

Fig. 7a - Honeywell C7232 CO_2 Sensor Typical Connections

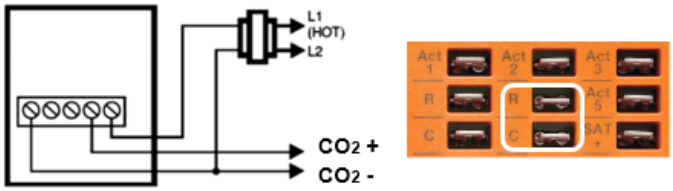

Fig. 7b - 24Vac Power Can Be Directly From the Transformer or The R and C Terminals

c. Power RTU and enter Settings Menu.

***Note:** When the CO_2 sensor is powered and 0-10 VDC is available at CO_2 + and CO_2 -, the ZIP Economizer will recognize the CO_2 presence and the prompt to set up CO_2 settings.*

d. Setting DCV settings.

i. With single speed indoor fan, only 2 DCV settings are required.

a. DCV (CO_2) Min(imum) Pos(ition) – This is the minimum occupied or zero occupancy ventilation rate expressed in damper percent open (Title 24 2013 section 120.1(b) 2; ASHRAE 62.1 Section 6.2.7).

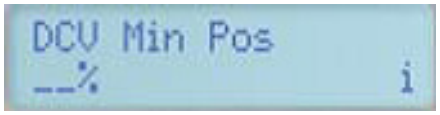

Fig. 8 - Screen Shot of LCD for DCV Minimum Position

b. The (Design) Minimum Position is the maximum allowable ventilation when CO_2 levels are elevated. This is also the vent setting when no DCV is used.



Fig. 9 - Screen Shot of LCD for Vent Minimum Position

c. DCV (CO_2) PPM Set Pnt – This is the CO_2 concentration in Parts Per Million that is desired in the space (Title 24 2013 section 120.1(c)4. prescribed as 600ppm plus outdoor air CO_2 concentration assumed to be 400ppm = a set point of 1000ppm).



Fig. 10 - Screen Shot of LCD for DCV Parts Per Million CO_2 Setpoint

ii. For 2-Speed Indoor Fan operation a Low Speed Vent Min and a Low Speed DCV Min will have to be set in addition to the DCV Min and DCV PPM Set. See page 7 for full Settings MENU.

Operation:

The ZIP Economizer Logic will control the outside air damper position based on space CO_2 dilution needs. If the CO_2 value is low, the damper shall remain at DCV Min Pos when not in free cooling. When the CO_2 concentration rises above the CO_2 PPM set point (as the space becomes more populated), then the damper will start to modulate towards Vent Min Pos to maintain level at CO_2 PPM Set Point. When the CO_2 concentration drops in the space (the space population decreases) the damper will start to modulate back towards DCV Min Pos.

Manufacturer reserves the right to discontinue , or change at any time, specifications. design and prices without notice and without incurring obligations.
Copyright MicroMetl Corporation 2017. All rights reserved.

Configuring Multiple Actuators

When using the ZIP Economizer on a Rooftop Unit (RTU) that has more than one damper that is not mechanically linked, the ZIP Economizer can drive a maximum of (3) -SR Actuators. The Actuators must be wired in parallel with the ACT3 output from the ZIP Economizer. The ACT5 feedback input on the ZIP Economizer should only be wired to the Outside Air Damper Actuator Feedback Wire, however.

Wiring for the Multiple Actuator Configuration is shown in Figure 11. Be sure to follow all warnings and cautions listed in the Actuator Mounting Instructions. Any combination of TFB24-SR, LF24-SR, NFB24-SR, and AFB24-SR can be mounted in this arrangement.

Note: *Size of transformer will need to be evaluated when using multiple actuators.*

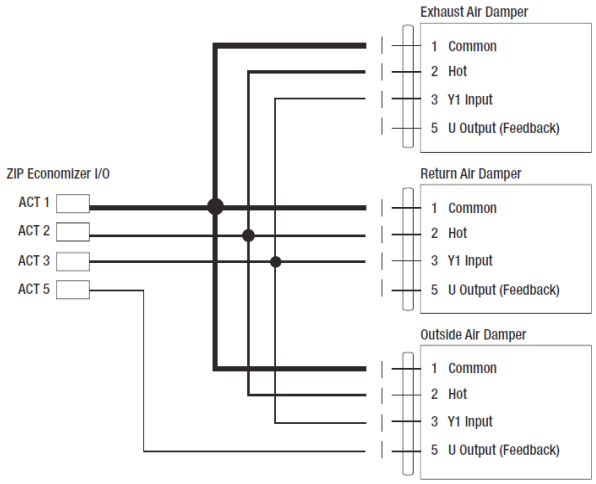

Fig. 11 - Multiple Actuator Wiring Scheme

FUNCTIONS MENU

1. “Monitor Live Conditions” is used to display settings and live values.

2. “Settings” is used to parameterize the ZIP Economizer. (Note: Devices 1 is for CC1, CC2, EF, IF; Devices 2 is for OAH, RAH)

3. “Present Devices” is used to verify that the ZIP Economizer’s Auto Detected connections are terminated properly. If connected device is not shown, verify wiring. If wiring has continuity and device is verified operational re-enter “Settings” and enable missing device by changing from “Auto” to “Available” or “Installed”.

4. “Alarms” is used to view current and historical alarms and delete inadvertently caused alarms.

5. “Service and Commissioning” sub-menu is used to operate the RTU in “Manual Mode” or to perform “Acceptance Test”.

Important: *“Settings” must to be completed to access.*

6. “Status Line” presents the current status of the economizer including contextual information like temperatures, damper position or compressor start / stop requests.

Additionally, newly detected sensors, device, and active alarm conditions get shown. It can be accessed by pressing “esc” from any Menu.

The action of pressing any key will drop the user down from Status to the next level, so repeatedly pressing “esc” will toggle the display between Status and Monitor Live Conditions.

Note: *If status “Setup incomplete” is displayed the RTU cooling operation will be disabled and additional parameters must be set to achieve “Setup complete”*

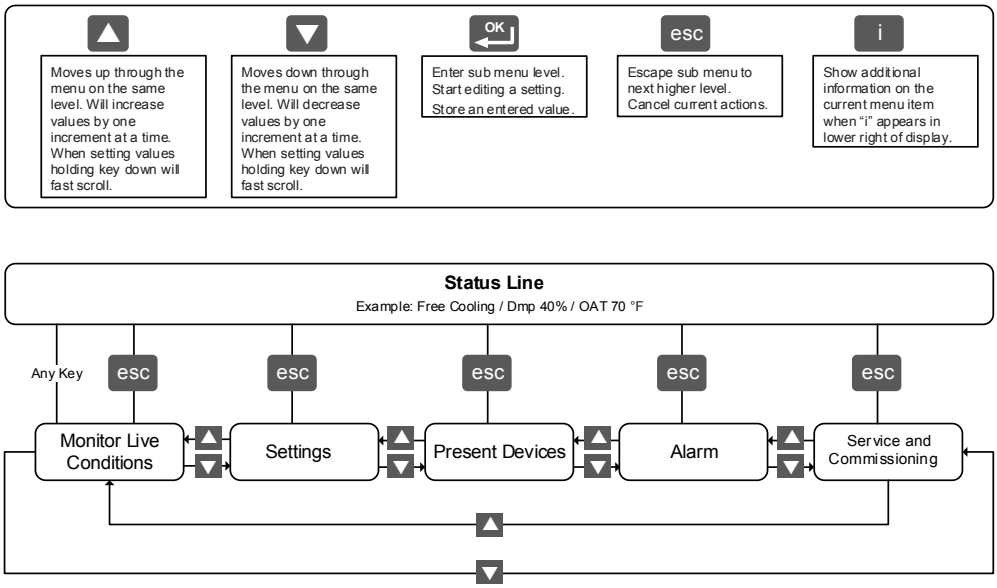

Fig. 12 - MENU Flow

Manufacturer reserves the right to discontinue , or change at any time, specifications. design and prices without notice and without incurring obligations.
Copyright MicroMetl Corporation 2017. All rights reserved.

Required "Settings" Parameters for All Configurations

Important: *You may enter parameters in any order - e.g.: Vent Min Pos before ZIP Code - If the RTU is a Heat Pump or uses a 2- Speed Indoor Fan, for example, these parameters should be enabled first, otherwise the logic may go to "Setup Complete" prematurely.*

Settings:

"Settings" is the menu displayed when the ZIP Economizer is first powered. Press "OK" to parameterize required settings. Reference Figure 12 Keypad Key Definition instructions and navigate as needed.



1. ZIP Code US or Canada (sets the Free Cooling Changeover High Limit - temperature units °F or °C)

   a. When the Zip Code Sub-menu is displayed enter "OK" to begin "US" Zip Code parameterization. If "Canada" Postal Code is desired press the UP/DOWN Arrow to access.

      i. Press OK to access digit 1 (flashing) then use the UP/DOWN Arrow to parameterize; enter OK when complete. Repeat until all digits are complete. If a mistake is made press "esc" and repeat from beginning.
      ii. When all Zip Code or Postal Code digits are entered press "esc" to move up a level then press the UP/DOWN Arrow to access next settings parameter.



2. Vent Min Pos (Outdoor Air Damper Ventilation Minimum Position)

   a. When the "Vent Min Pos" Sub-menu is displayed press "OK" to parameterize (flashing)

   b. Use the Use the UP/DOWN Arrow to parameterize, press "OK" when complete. The Actuator will immediately drive the damper to the Minimum Position.

3. Additional Parameters may require setting. The ZIP Economizer will auto detect added Devices such as a CO_2 sensor etc. When the ZIP Economizer detects a new device, it will prompt the user in the Status level; navigate to Settings and parameterize blank fields. If the devices are connected upon first start up their settings will require parameterization then.

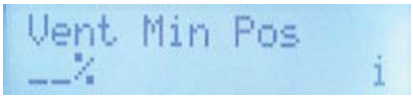

4. When all parameters have been set, the ZIP Economizer will show "Setup Complete" if there are still parameters to set, there will be no action. You can verify by pushing esc until status level is reached and it will display "Setup Incomplete." If this is the case, re-enter Settings MENU and use UP/DOWN Arrows to find the parameter with blank fields and parameterize as described above.

Setup Complete - Initializing Automatic Mode

1. When all entries have been completed, the ZIP Economizer will switch to Status display and show "Setup Complete", and will immediately show a "Damper Scaling Starts in 10secs" and will countdown to 0 (be aware, at 0 the damper will start to move at high speed) . A message will scroll saying "Damper Scaling. For better operation if obstruction is present rescale damper in commissioning menu". (For detailed instructions on this – please see the section "Service and Commissioning" below. This will open damper to 100% (re-scale control signal if needed).

Note: *Failure to identify obstructions or improper setup of damper assembly may result in an improper scaling and operation of the damper.*

2. Once scaling is complete, a message will appear saying "Damper scaling successful". The ZIP will then show "maximum at XX° = 100%" That message will show maximum rotation of the damper. This process ensures the damper is always operating and displayed from 0-100%.

3. Once the message has appeared, the Actuator immediately closes the damper and a countdown begins, until the unit starts to operate in Automatic Mode (be aware, when countdown complete, the RTU will respond to thermostat calls which may enable mechanical cooling).

Service and Commissioning (Acceptance Test & Manual Mode)

The ZIP Economizer has built in commissioning processes found in Acceptance Test.

1. Economizer Test. Use "Economizer Test" to verify RTU Integrated Economizer operation. Navigate to the "Service and Commissioning" menu, press "OK"; press the down arrow to access "Acceptance Test". Press OK again when "Economizer Test" appears. Press "OK" again to confirm running test. Follow prompts during test. This test will open damper to 100%, enable Power Exhaust Fan (if connected), enable 1st stage of Mechanical Cooling, reverse this process and then drive to Vent Min Pos. When used with a Belimo Actuator, the Actuator will speed up to reduce test time.

2. Manual Mode is used to override outputs after entering a "Timeout" duration.

3. Damper Scaling. The test will re-scale the control signal range to maximum resolution (0-100%) over the calibrated (reduced) angle. When using a Belimo Actuator, the actuator will speed up to reduce test time.

Important: *Failure to identify obstructions or improper setup of damper assembly may result in an improper scaling and operation of the damper.*

Note: *Additional testing info is on page 12 and 13 of this document.*

Manufacturer reserves the right to discontinue , or change at any time, specifications. design and prices without notice and without incurring obligations.
Copyright MicroMetl Corporation 2017. All rights reserved.

MENU SEQUENCE - Settings

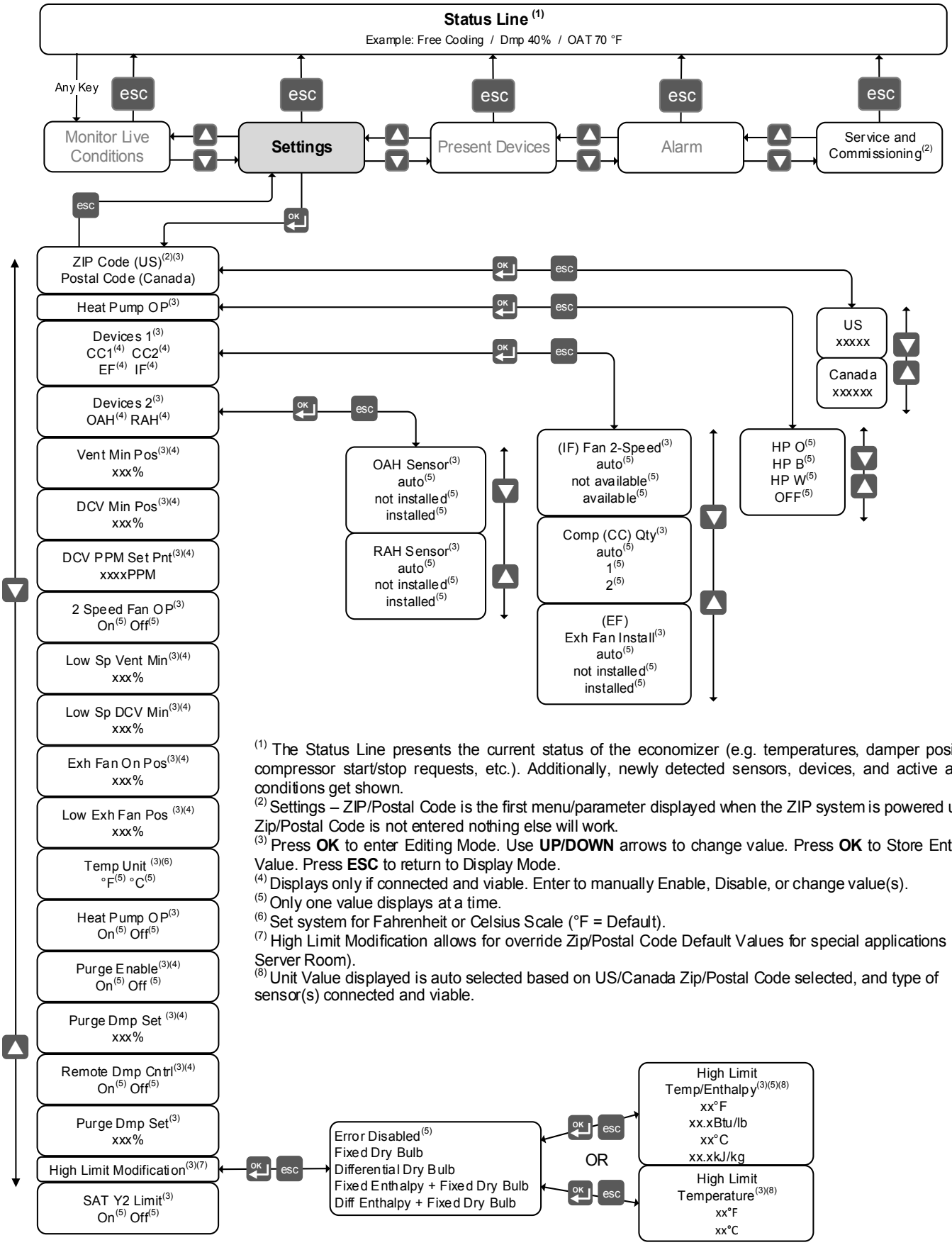

(1) The Status Line presents the current status of the economizer (e.g. temperatures, damper position, compressor start/stop requests, etc.). Additionally, newly detected sensors, devices, and active alarm conditions get shown.
(2) Settings – ZIP/Postal Code is the first menu/parameter displayed when the ZIP system is powered up. If Zip/Postal Code is not entered nothing else will work.
(3) Press **OK** to enter Editing Mode. Use **UP/DOWN** arrows to change value. Press **OK** to Store Entered Value. Press **ESC** to return to Display Mode.
(4) Displays only if connected and viable. Enter to manually Enable, Disable, or change value(s).
(5) Only one value displays at a time.
(6) Set system for Fahrenheit or Celsius Scale (°F = Default).
(7) High Limit Modification allows for override Zip/Postal Code Default Values for special applications (e.g. Server Room).
(8) Unit Value displayed is auto selected based on US/Canada Zip/Postal Code selected, and type of sensor(s) connected and viable.

Manufacturer reserves the right to discontinue , or change at any time, specifications. design and prices without notice and without incurring obligations.
Copyright MicroMetl Corporation 2017. All rights reserved.

MENU SEQUENCE - Service and Commissioning - Acceptance Test

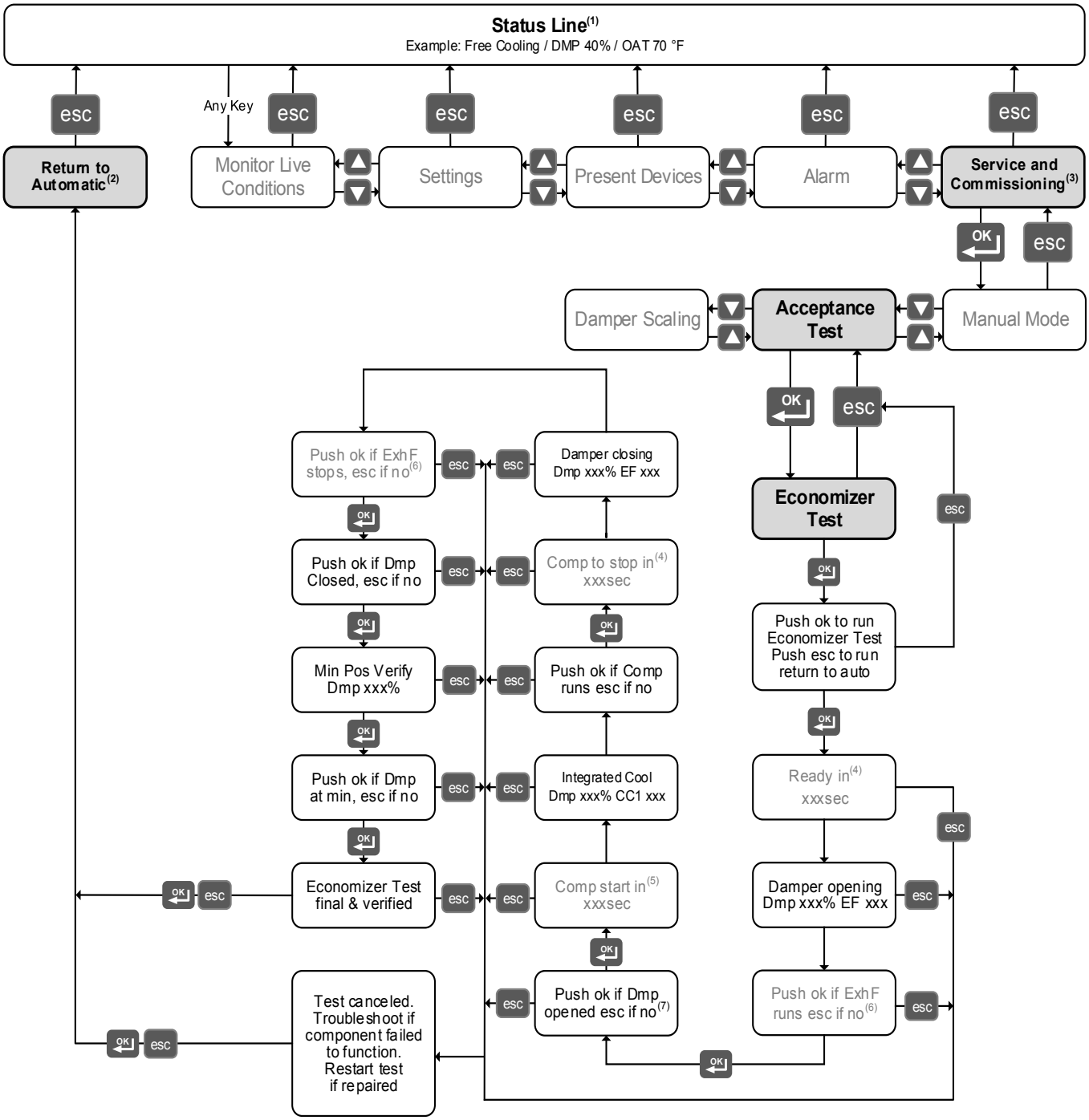

(1)The Status Line presents the current status of the economizer (e.g. temperatures, damper position, compressor start/stop requests, etc.). Additionally, newly detected sensors, device, and active alarm conditions get shown.
(2)Only displayed if acceptance test or manual mode is active. If not present navigation jumps over this entry. Must press OK to return to automatic.
(3)Only displayed after setup has been completed.
(4)Only displayed if a compressor is running. During this test the compressor (CC1) will run for 60 seconds.
(5)Only displayed if compressor not yet started.
(6)Only displayed if exhaust fan is present.
(7)During the damper stroke, it will scale the damper 0-100%. If the rotation is less than 90° there will be up to a 90 second delay until you are asked to confirm damper opening.

Manufacturer reserves the right to discontinue , or change at any time, specifications. design and prices without notice and without incurring obligations.
Copyright MicroMetl Corporation 2017. All rights reserved.

States:

Virgin State - The ZIP Economizer comes shipped from the factory in this state. When “Setup Incomplete” is displayed, no control will occur until setup is completed.

Automatic State – All of the following strategies and operational modes are available in this state.

A minimum of two pieces of information (in level 2 Settings MENU) must be entered before the ZIP Economizer will go into Automatic State:

1. The appropriate ZIP code must be entered.

2. The minimum damper position set point (Vent Min Pos) percentage must be entered.

When in Automatic State, the G input terminal is used to monitor a Thermostat Occupancy Output, Time-clock or Indoor Fan Signal. When the G terminal is energized, the ZIP Economizer will operate in Occupied (damper will move to the proper ventilation position). Otherwise, the ZIP Economizer will operate in Unoccupied.

Important: *Operation from a Thermostat Fan Signal does not meet Occupancy Code Requirements.*

Strategies:

Compressor Protection and Energy Savings
DXLL (Supply Air Low Temperature Protection in Mechanical Cooling). This strategy is activated automatically when in Mechanical Cooling Mode depending on supply air temperature. Timers, temperature dead bands and SAT Y2 Limit setting all interact with this strategy.

- IF SAT is less than 45°F
  THEN all compressor stages are disabled.

- IF SAT is greater than or equal to 45°F
  AND less than 47°F
  THEN Compressor stages may or may not be enabled based on whether or not SAT is rising or falling.

- IF SAT is greater than or equal to 47°F AND SAT Y2 limit is OFF
  THEN both compressor stages are enabled

- IF SAT is greater than or equal to 47°F AND less than 56.5°F AND SAT Y2 limit is ON
  THEN 1st stage compressor is enabled and 2nd stage compressor is disabled.

- IF SAT is greater than or equal to 56.5°F
  THEN both compressor stages are enabled.

SAT Y2 Limit

This strategy inhibits the 2nd stage compressor from coming on prematurely based on SAT temperature and time.

- IF Y2 is energized AND Compressor 1 has been running for less than 4 minutes
  AND Supply Air Temp is less than or equal to its required set point +1.5° (56.5°F)
  THEN Compressor 2 will not be allowed to come on.

LCLO (Low Ambient Compressor Lockout)

This strategy inhibits compressor operation at low outdoor air temperatures.

- IF OAT falls below the low limit (50°F)
  AND not in Heat Pump Mode
  THEN Compressor 1 and Compressor 2 will be disabled.

- IF OAT rises 2°F above the Low Limit (52°F)
  OR in Heat Pump Mode
  THEN Compressor 1 and Compressor 2 will be enabled.

Minimum On/Off Time

This strategy prevents the compressors from “short-cycling”.

- IF any Compressor is energized it run it at least 180 seconds EXCEPT when entering Brownout Mode when compressors will be shut off immediately.

- IF any Compressor is de-energized it will be kept off for at least 180 seconds.

No Simultaneous ON/OFF

On RTUs with 2 compressors this strategy is used to prevent both compressors from coming on at the same instant to keep electrical demand down.

- Compressors 1 & 2 are kept from switching on together by a 10 second time delay.

- If SAT Y2 Limit is set to “On” compressor 2 is delayed by 240 seconds to evaluate if the single compressor already operating can bring SAT less than or equal to set point +1.5 °F (56.5°F).

- Compressors 1 & 2 are kept from switching off together by a 5 second time delay EXCEPT when entering Brownout when compressors will be shut off immediately.

Brownout Protection

Input power (24Vac) is monitored.

- IF input voltage drops to 75%
  AND it stays there for 30 seconds
  THEN Brownout will be enabled.

- IF input voltage rises to 85%
  AND it stays there for 300 seconds
  THEN Brownout will be disabled.

Under Brownout conditions the current operating mode will be maintained EXCEPT Mechanical Cooling and

Manufacturer reserves the right to discontinue , or change at any time, specifications. design and prices without notice and without incurring obligations.
Copyright MicroMetl Corporation 2017. All rights reserved.

Integrated Cooling (where compressors are utilized. Instead of Mechanical Cooling it will go to Ventilation, DCV or Unoccupied. Instead of Integrated Cooling it will go to Free Cooling.

This strategy prevents compressor operation during Brownout conditions. Compressors will be turned off immediately (bypassing Minimum ON/OFF Timers).

Random On Delay after Power Up

After a Power Blackout or any Power Restore, compressors will go through a random time delay before allowing them to operate. This Random Timer is between 30-180 seconds. This helps the electrical network to come back up without excessive demand from multiple RTUs and compressors coming back on after the Blackout.

High Limit Changeover

Note: Economizing is enabled based on one of the following four options, and becomes active in Free Cooling and Integrated Cooling.

Single Dry Bulb Changeover

If only an OAT Sensor is connected, it will be analyzed against the reference Outdoor Air Changeover Temperature Value (based on entered ZIP code).

- IF OAT is 2°F below the reference value
  THEN economizing will be enabled.

- IF OAT is above the reference value
  THEN economizing will be disabled.

Differential Dry Bulb Changeover

Must have OAT and RAT Sensors connected. OAT and RAT will be analyzed against each other and the OAT will be analyzed against the reference Differential Temperature High Limit (DTHL) (based on entered ZIP code).

- IF OAT is 2-8°F below the RAT (Value Climate Zone Dependent)
  AND OAT is 2°F below the reference DTHL
  THEN economizing will be enabled.

- IF OAT is greater than or equal to 0-6°F below the RAT (Value Climate Zone Dependent)
  OR the OAT is greater than the reference DTHL
  THEN economizing will be disabled.

Single Enthalpy Changeover

Must have OAH (RH) and OAT Sensors connected. Outdoor Air Enthalpy will be calculated. They will be analyzed against the reference values as follows:

- IF Outdoor Enthalpy is 2 btu/lb less than the reference Enthalpy High Limit (ETHL) (default is 28 btu/lb – 2 btu/lb = 26 btu/lb)
  AND OAT is 2°F below the reference ETHL (based on entered ZIP code)
  THEN economizing will be enabled.

- IF Outdoor Enthalpy is greater than reference ETHL (default is 28 btu/lb)
  OR OAT is greater than the reference Temperature High Limit ETHL (based on entered ZIP code)
  THEN economizing will be disabled.

Differential Enthalpy Changeover

Must have OAH, OAT, RAH and RAT Sensors connected. Outdoor Air Enthalpy and Return Air Enthalpy will be calculated.

- IF Outdoor Enthalpy is 2.5 btu/lb less than Return Air Enthalpy
  AND Outdoor Enthalpy is 2 btu/lb less than the reference Differential Enthalpy High Limit (DEHL) (30 btu/lb)
  AND OAT is 2°F below the reference DTHL (based on entered ZIP code)
  THEN economizing will be enabled.

- IF Outdoor Air Enthalpy is 1 btu/lb less than Return Air Enthalpy
  OR Outdoor Air Enthalpy is greater than reference DEHL (30 btu/lb)
  OR OAT is greater than reference DTHL (based on entered ZIP code)
  THEN economizing will be disabled.

Operational Modes:

Free Cooling

Outdoor Air Ambient conditions are analyzed by one of the 4 Changeover Strategies above (Single or Differential Dry Bulb; Single or Differential Enthalpy) and has been deemed suitable for “free” cooling.

- Y1 is energized indicating a call for stage 1 cooling.

- Y2 is de-energized.

- W1 is de-energized.

- G input could be energized or de-energized (occupied or unoccupied state).

- Compressor 1 is off[2].

- Compressor 2 is off[2].

- Indoor Fan is on Low Speed.

- Exhaust Fan could be running or not based on % damper open position[1].

- Damper Position output is modulated between the respective current Minimum Damper Position Set Point and 100% open to attempt to maintain SAT set point (55°F). When OAT is at 55°F the damper will be fully open to outside air. As outdoor air continues to rise above 55°F, SAT will rise with it.

Integrated Cooling

Outdoor Air Ambient conditions are analyzed by one of the four Changeover Strategies (Single or Differential Dry Bulb; Single or

Manufacturer reserves the right to discontinue , or change at any time, specifications. design and prices without notice and without incurring obligations.
Copyright MicroMetl Corporation 2017. All rights reserved.

Differential Enthalpy) and has been deemed suitable for “free” cooling.

- Y1 is energized indicating a call for stage 1 cooling.
- Y2 is energized indicating a call for stage 2 cooling.
- W1 is de-energized.
- G input could be energized or de-energized (occupied or unoccupied state).
- Compressor 1 is on[2].
- Compressor 2 is off[2].
- Indoor Fan is on Low Speed.
- Exhaust Fan is on[1].
- Damper Position output is fixed at 100% (fully open to outdoor air).

Note: *Outdoor Damper must be fully open for 60 seconds before mechanical cooling will be enabled.*

Mechanical Cooling

Outdoor Air Ambient conditions are analyzed by one of the 4 Changeover Strategies above (Single or Differential Dry Bulb; Single or Differential Enthalpy) and has been deemed NOT suitable for “free” cooling.

- Y1 is energized indicating a call for stage 1 cooling.
- Y2 may or may not be energized depending on t-stat call for stage 2 cooling.
- W1 is de-energized.
- G input could be energized or de-energized (occupied or unoccupied state).
- Compressor 1 is on[2].
- Compressor 2 may or may not be on based on t-stat call for stage 2 cooling[2]
- Indoor Fan is may be on High or Low Speed.
- Exhaust Fan is off[1].
- Damper Position output is at Vent Min Pos if indoor Fan is on High Speed. Output is at Low SP Vent Min if Indoor Fan is on Low Speed.

Ventilation

Outdoor air may or may not be suitable “for free cooling”.

- Y1 is de-energized.
- Y2 is de-energized.
- W1 is de-energized.
- G input is energized indicating occupied state of operation.
- Compressor 1 is off[2].
- Compressor 2 is off[2].
- Fan Speed will be energized (Indoor Fan is operating on Low Speed).
- Exhaust Fan is off[1].
- Damper Position output is at Low SP Vent Min[1].

DCV[1]

Outdoor air may or may not be suitable “for free cooling;” however still utilizing fresh air for cooling

- Y1 may or may not be energized depending on t-stat call for stage 1 cooling.
- Y2 may or may not be energized depending on t-stat call for stage 2 cooling.
- W1 may or may not be energized depending on t-stat call for heating.
- G input is energized indicating occupied state.
- Compressor 1 may or may not be on depending on t-stat call for stage 1 cooling[2].
- Compressor 2 may or may not be on depending on t-stat call for stage 2 cooling[2].
- Indoor Fan may be High or Low Speed.
- Exhaust Fan is off[1].
- Damper Position – Minimum outdoor damper position will be modulated based on CO_2 levels.
    - IF Indoor Fan is on High Speed and CO_2 levels are high, minimum damper position will be at Vent Min Pos;
    - IF CO_2 levels are low, minimum damper position will be at DCV Min Pos. As CO_2 levels fluctuate, minimum damper position will modulate between these 2 minimum settings.
    - IF Indoor Fan is on Low Speed, the two minimum damper settings reference will change to Low SP Vent Min and Low SP DCV Min respectively.

Heating

Outdoor air may or may not be suitable “for free cooling”.

- Y1 is off (unless RTU is a heat pump).
- Y2 is off (unless RTU is a heat pump).

Manufacturer reserves the right to discontinue , or change at any time, specifications. design and prices without notice and without incurring obligations.
Copyright MicroMetl Corporation 2017. All rights reserved.

- W1 is energized.
- G input may or may not be energized (Occupied or Unoccupied state).
- Compressor 1 is de-energized (unless Heat Pump Op in Settings MENU is turned on) [2].
- Compressor 2 is de-energized (unless Heat Pump Op in Settings MENU is turned on) [2].
- Indoor Fan is operating on High or Low Speed) - See Indoor 2-Speed Fan sequence under Energy Module Option Functions[1].
- Exhaust Fan is off[1].
- Damper Position output is at Vent Min Pos or damper in DCV position - See DCV mode[1].

Unoccupied

Outdoor air may or may not be suitable “for free cooling”.

- Y1 may or may not be energized depending on t-stat call for stage 1 cooling.
- Y2 may or may not be energized depending on t-stat call for stage 2 cooling.
- W1 may or may not be energized depending on t-stat call for stage 1 heating.
- G input is de-energized (Unoccupied state).
- Compressor 1 may or may not be on depending on thermostat call for stage 1 cooling[2].
- Compressor 2 may or may not be on depending on thermostat call for stage 2 cooling[2].
- Fan Speed may or may not be energized (Indoor Fan is operating on High or Low Speed or not at all).
- Exhaust Fan is off[1].
- Damper Position output is closed to Outdoor Air.

Energy Module Option Functions[1]

Purge[1] (Purge Control in Settings MENU must be turned on to enable and 24Vac applied to AUX1)

Outdoor air may or may not be suitable “for free cooling”.

- Y1 may or may not be energized depending on thermostat call for stage 1 cooling.
- Y2 may or may not be energized depending on thermostat call for stage 2 cooling.
- W1 may or may not be energized depending on thermostat call for stage 1 heating.
- G input may or may not be energized (Occupied or Unoccupied state).
- Compressor 1 may or may not be energized depending on thermostat call for stage 1 cooling[2].
- Compressor 2 may or may not be energized depending on thermostat call for stage 2 cooling[2].
- Fan Speed may or may not be energized (Indoor Fan is operating on High or Low Speed).
- Exhaust Fan is off[1].
- Damper Position output goes to value set in Purge Dmp Set.

Damper Override

- IF Remote Dmp Cntrl is turned on (enabled) in Settings MENU AND G powered
  THEN Damper Position will go to the value of the signal input (0-10 VDC) at AUX2.

Note: *If outdoor air is suitable for “free cooling” and damper is override to closed position, there will be no cooling.*

Exhaust Fan (Operates only in Free Cooling and Integrated Cooling.)

Note: *In theory, if Exh Fan On Pos/Low Exh Fan Pos for damper % is set very low, then Exhaust Fan could also run in other modes (Ventilation, Mechanical, DCV).*

Control of the Exhaust Fan is damper position dependent. Damper set point for enable/disable of the Exhaust Fan is Indoor Fan Speed dependent (High Speed Damper Set point = Exh Fan On Pos; Low Speed Damper Set point = Low Exh Fan Pos).

- IF Damper Pos is 10% greater than Exh Fan On Pos/Low Exh Fan Pos
  OR Damper Pos is 100% open
  THEN Exhaust Fan will be energized.
- IF Damper Pos is 10% less than Exh Fan On Pos/Low Exh Fan Pos
  OR Damper Pos is less than 5% open
  THEN Exhaust Fan will be de-energized.

Example: *If Exh Fan On Pos is set at 45%, when damper opens to 55%, exhaust fan will turn on. When damper closes to 35%, exhaust fan will turn off.*

Service and Commissioning

Manual Mode

This menu is available after Setup has been completed. This is selected in Level 2 menu Service and Commissioning. This supports the commissioning phase allowing all connected RTU components (except for the room thermostat) to be tested by manually commanding them through the keypad interface. **To**

Manufacturer reserves the right to discontinue , or change at any time, specifications. design and prices without notice and without incurring obligations.
Copyright MicroMetl Corporation 2017. All rights reserved.

prevent RTU safety lockout and possible equipment damage, ensure the RTU indoor fan is running! Return to Automatic will occur automatically between 1-8 hours (adjustable) unless Return to Automatic is selected.

Note: *Damper will move at high speed.*

Note: *Compressors, Exhaust Fan1 and Indoor 2-Speed fan[1] minimum on or minimum off time does NOT apply in this test state. They will be turned on and off immediately based on the entered command. Also, Exhaust Fan[1] will not be turned on automatically based on damper position in this mode, but it can be manually commanded.*

Damper Scaling

If there was a mechanical failure or adjustment that prevented proper damper scaling from virgin to automatic, it can be rescaled. "Damper scaling starts in 10 secs" and will countdown to 0. A message will scroll saying "Damper scaling for better operation. If obstruction is present rescale damper in commissioning menu". (For detailed instructions on this – please see the section "Service and Commissioning." This will open damper to 100% (re-scale control signal if needed).

Note: *failure to identify obstructions or improper setup of damper assembly may result in an improper scaling and operation of the damper.*

Once scaling is complete, a message will appear saying "Damper scaling successful". The ZIP will then show "maximum at XX° = 100%" That message will show maximum rotation of the damper. This process ensures the damper is always operating and displayed from 0-100%.

Acceptance Test (Four possible options)

This menu is available after Setup has been completed. This complies with the California Title 24 Mechanical Testing and has four tests. To prevent RTU safety lockout and possible equipment damage, ensure the RTU indoor fan is running!

Economizer Test (NA7.5.4)

This is an automatic functional and verification test that moves the damper 100% open/100% closed/and Minimum Position and switches on CC1 and EF1 (if available). It leads one through the test step by step in accordance with California Title 24 test form.

Note: *1 minute minimum on time; 1 minute minimum off time for compressor applies in this test to prevent damage from short cycling. Exhaust fan[1] does turn on based on damper position in this test.*

Note: *Damper will move at high speed.*

Ventilation Test (NA7.5.1.2)

This is a manual test that allows adjustment to the damper minimum position (Vent Min Pos) in the Settings menu for verification of ventilation rates.

Note: *Damper minimum position must be commanded to get damper to go to minimum position in this mode!*

Example: *Prior to going into this test, let's say Vent Min Pos is set for 20%. After going into this test you still must go into Settings/Vent Min Pos and change the value by at least 1%, then you can change back to 20%. If you don't create a change of value for Vent Min Pos the damper will not move off fully closed position in this test. The new Vent Min Pos setting you enter will be stored and used when you return to automatic.*

RTU Test (NA7.5.2)

This is a manual test used to test the following signals from the thermostat to the RTU:

- G powered (Occupied) – damper is at minimum position (Vent Min Pos); otherwise the damper goes closed to outdoor air (Unoccupied).
- Y1 powered – CC1 is energized; otherwise CC1 is de-energized.
- Y2 powered – CC2 is energized; otherwise CC2 is de-energized.

  Note: *1 minute minimum on time; 1 minute minimum off time applies in this test mode to prevent damage from short cycling compressors.*

- W1 powered – Heating is enabled.

DCV[1] Test (NA7.5.5)[3]

This is a manual test used for the following CO_2 input will be used to modulate minimum damper position between DCV Min Pos and Vent Min Pos as CO2 levels vary below and above (respectively) the CO_2 Set point.

All of the above tests can be aborted by selecting Return to Automatic in the Level 2 menu.

Notes:

[1] Only available with Energy Module Option. If no Energy Module exists associated menu options will not be displayed.

[2] Subject to Compressor Protection Strategies as noted earlier.

[3] "G" must be energized to run test.

For additional technical information on this product go to: http://www.zipeconomizer.com

MicroMetl Indianapolis
3035 N. Shadeland Ave., Suite 300
Indianapolis, IN 46226
1.800.MMC.HVAC (EST)
indycustomerservice@micrometl.com

MicroMetl Longview
201 Kodak Blvd.
Longview, TX 75602
1.903.248.4800 (CST)
longviewcustomerservice@micrometl.com

MicroMetl Sparks
905 Southern Way
Sparks, NV 89431
1.800.884.4662 (PST)
sparkscustomerservice@micrometl.com

Manufacturer reserves the right to discontinue , or change at any time, specifications. design and prices without notice and without incurring obligations.
Copyright MicroMetl Corporation 2017. All rights reserved.

Form No. CD-BZ-A

MicroMetl

Since 1965

Carrier Small Package High Efficient Two Stage
Gas or Electric Heat / Cooling with 2-Speed Fan

MicroMetl provided wiring : ————————
Carrier Factory wiring : -
Field provided and installed wiring : — — —
Connector / Wire Nut : ●
CC: CompressorContactor
LPS/HPS: Low Pressand High PressControl

Note 1: Color of field installed thermostat wire is installers choice. Colors provided here are for ease of following diagram.

Note 2: Remove Compressor Output (Black, Blue, or Yellow – depending on model) from Y (IFB), or CONT (IGC) and connect to Economizer Gray (Y1-Output) wire. Connect Economizer Yellow (Y1-Input) to Y / CONT.

Note 3: RA Actuator must be field routed and connected.

Note 4: Optional RA Sensor. Wire Harness and Sensor provided only if ordered.

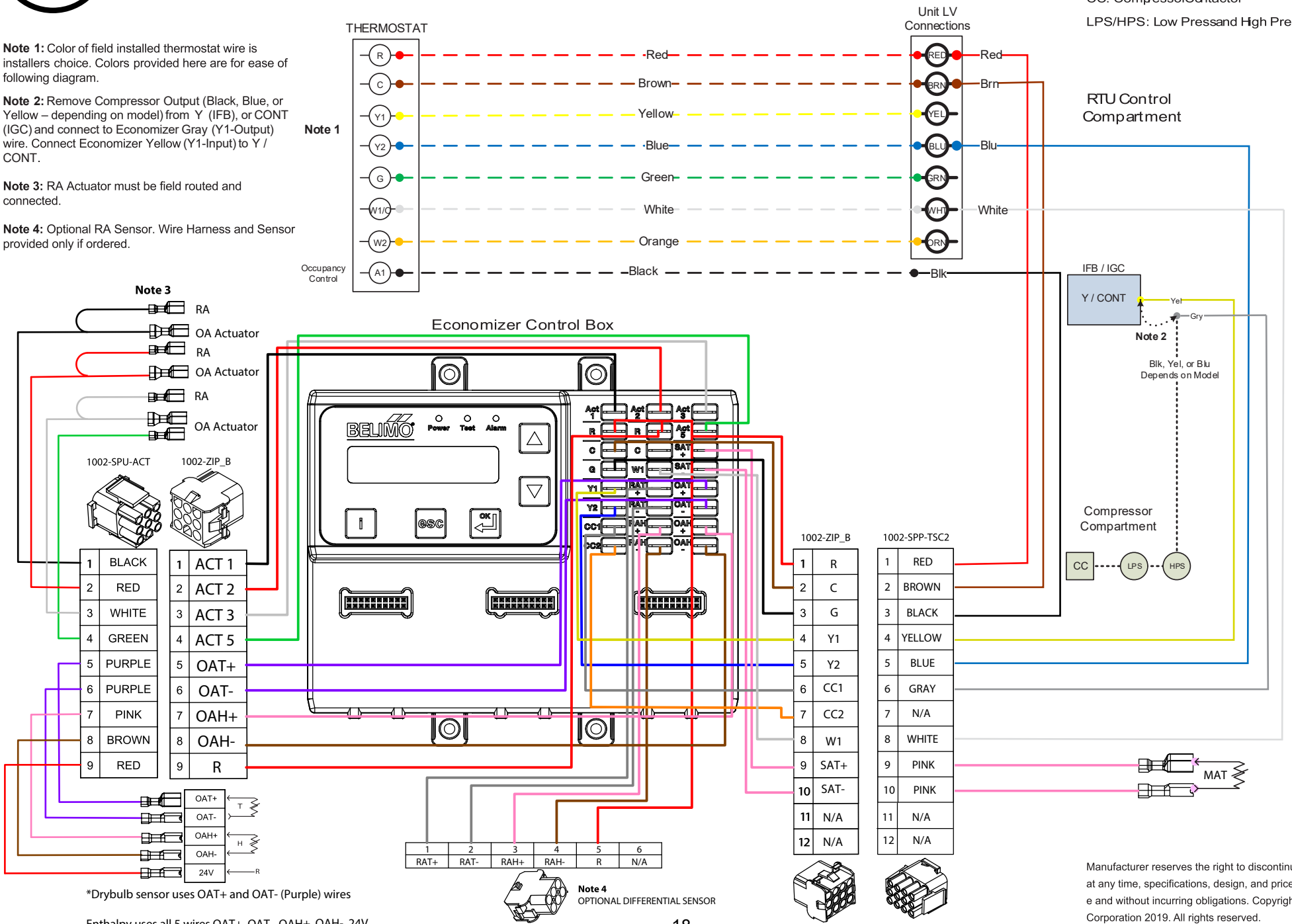

*Drybulb sensor uses OAT+ and OAT- (Purple) wires

Enthalpy uses all 5 wires OAT+, OAT-, OAH+, OAH-, 24V

Manufacturer reserves the right to discontinue , or change at any time, specifications, design, and prices without notice and without incurring obligations. Copyright MicroMetl Corporation 2019. All rights reserved.

Form No.WD-SPP-Z2-A

MicroMetl

Heat Pump Relay Option for Carrier Small Package High Efficient Two Stage Cooling / Heating with 2-Speed Fan

MicroMetl provided wiring : ——————

Carrier Factory wiring : ----------

Field provided and installed wiring : — — —

Connector / Wire Nut : ●

CC: CompressorContactor

LPS/HPS: Low Pressand High PressControl

Note 1: Color of field installed thermostat wire is installers choice. Colors provided here are for ease of following diagram.

Note 2: Electric Heat Pump – Break connection in the Carrier Factory Yellow wire between IFB Y (P2-2) and DF Board Y (P1-5). Reconnect as shown.

Note 2: Dual Fuel – Disconnect the Yellow wire at CONT on the IGC and connect the Yellow wire from the Economizer Harness to CONT. Then connect the Gray wire to the Yellow wire removed from the DF Board.

Note 3: See page 1 for all accessories and/ or sensors not shown here.

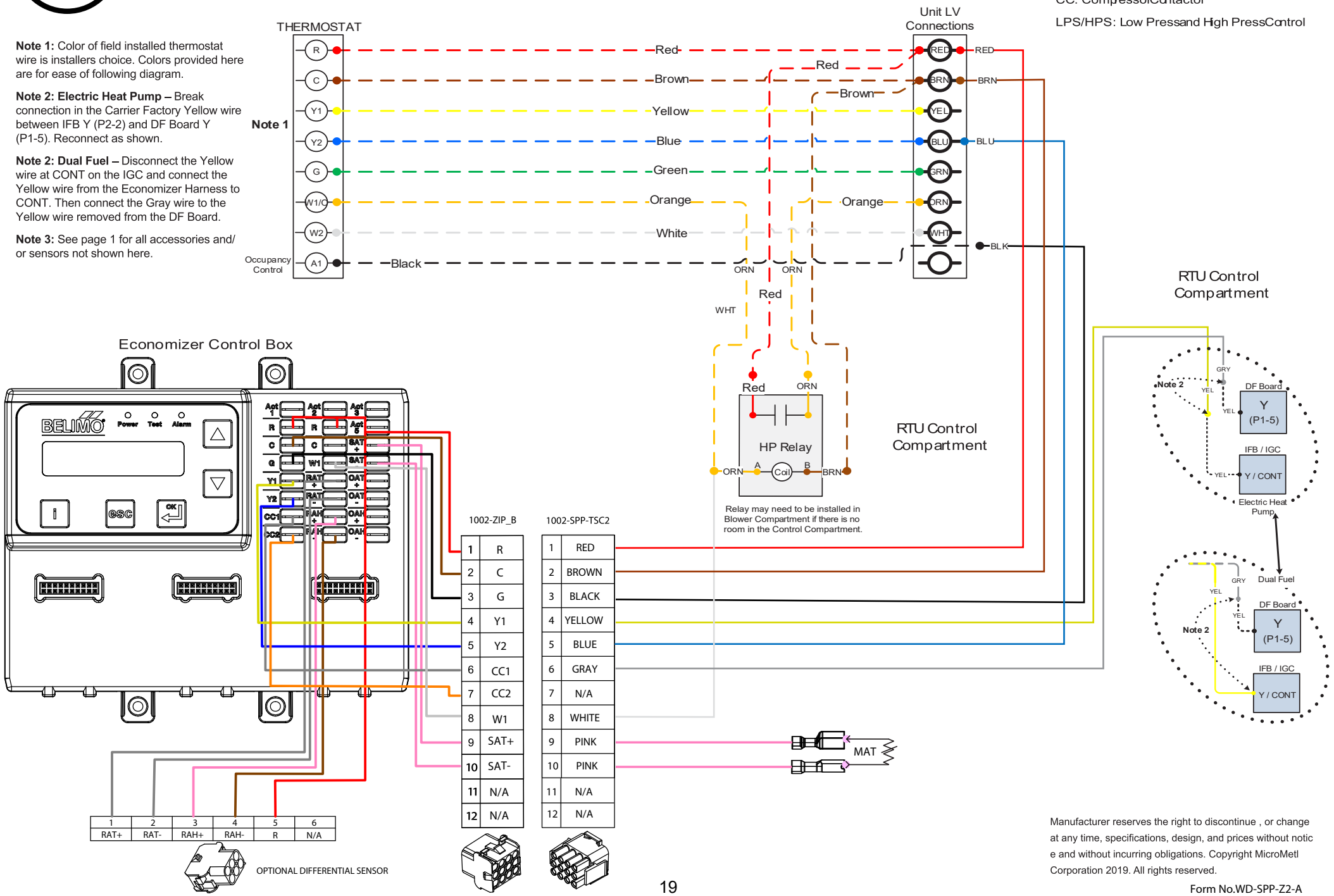

Manufacturer reserves the right to discontinue , or change at any time, specifications, design, and prices without notic e and without incurring obligations. Copyright MicroMetl Corporation 2019. All rights reserved.

Form No.WD-SPP-Z2-A