Hef-T-Bracket Installation - 230-B2M

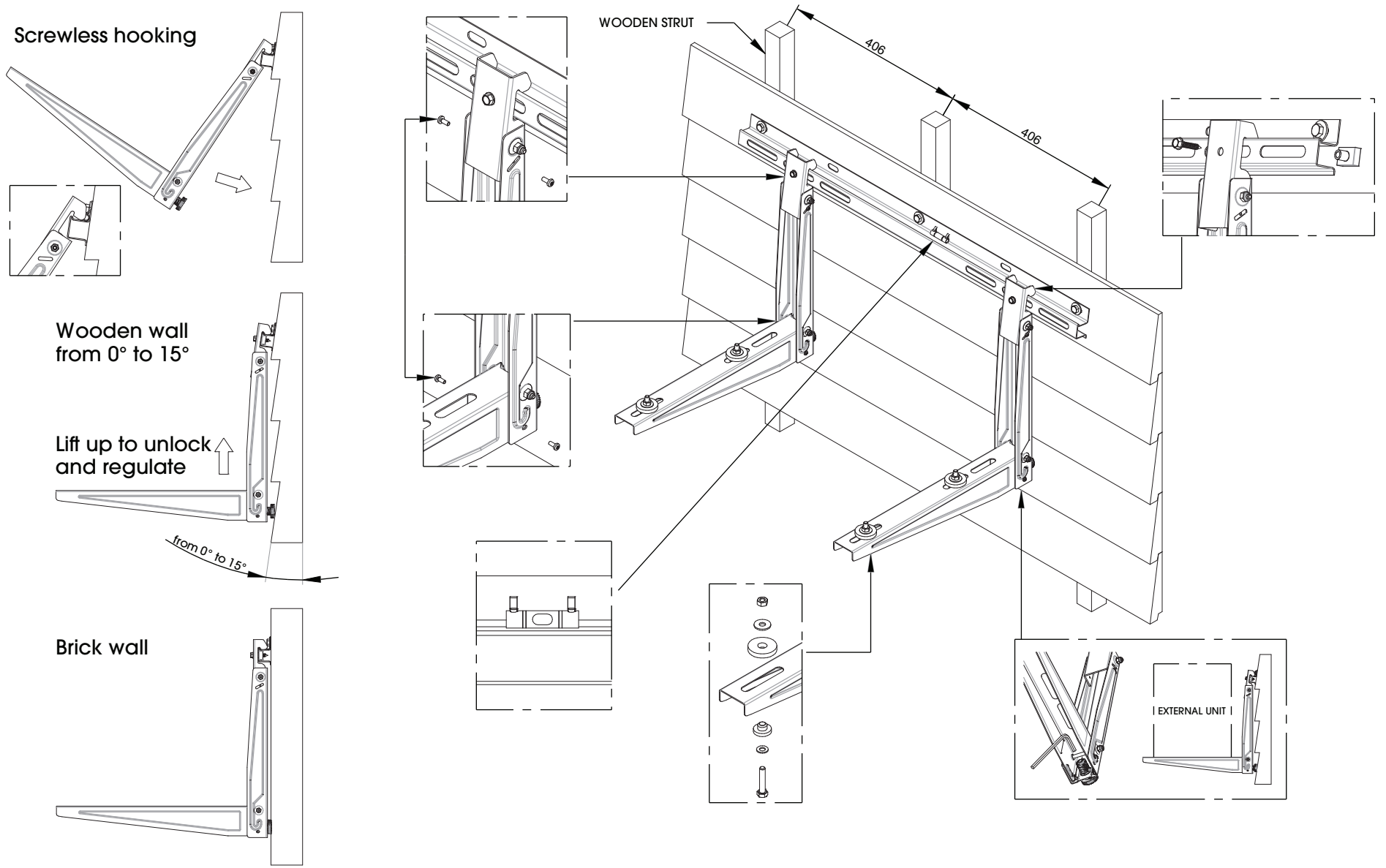

Item code	Wall-bar length	Arm length	Load capacity
230-B2M	880 mm / 34,65 in.	465 mm / 18,30 in.	140 kg / 310 lbs

DOCXXXXXX
DiversiTech Corporation
3039 Premiere Pkwy, Suite 600
Duluth, GA 30097