Model 8120X Digital Ventilation Controller

Installation and Operation Manual



READ AND SAVE THESE INSTRUCTIONS

TABLE OF CONTENTS

Warnings and Cautions 3

Package Contents 4

Specifications 4

Mounting the Controller and Outdoor Temperature Sensor 5

Mounting to an 8140NC Ventilator 5

Mounting the Controller to the Return Ductwork 6

Mounting the Controller in a Closet Return Plenum 8

Mounting the Outdoor Temperature Sensor 9

Wiring 10

Wiring to Furnace 10

Wiring to Heat Pump 11

Wiring to or Model 8140NC Fresh Air Ventilator 11

Wiring to Model 6506 Damper 12

Operation 13

Set Up Menu 14

Test Mode 17

Rater/Inspector Verification 18

Sequence of Operation – "Code" Setting 19

Sequence of Operation – "Comfort" Setting 19

Limited Warranty 20

WARNINGS AND CAUTIONS

⚠ WARNING

- 120 volts can cause serious injury from electric shock. Disconnect electrical power to the HVAC system before proceeding.
- Sharp metal edges can cause serious injury from cuts. Use gloves when cutting openings in sheet metal.

NOTICE

- When installing the Ventilation Controller on downflow furnaces, ensure that the furnace blower continues to run sufficiently long after the heat call is satisfied to prevent temperatures from exceeding the maximum operating temperature.
- Do not mount the Ventilation Controller downstream from any fresh air intake port, humidifier bypass or zone control bypass. False humidity conditions will cause the Ventilation Controller to operate incorrectly.

PACKAGE CONTENTS

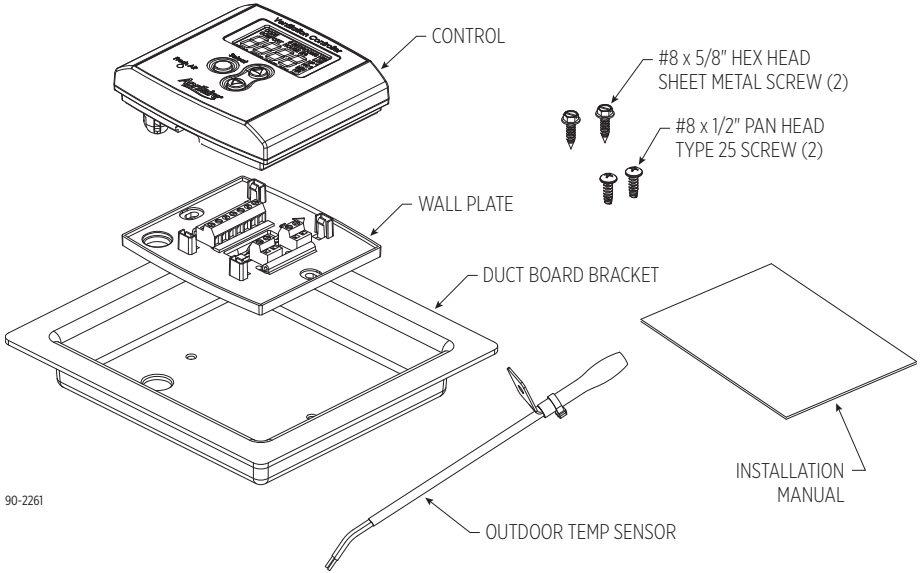

SPECIFICATIONS

Operating Temperature Range	20°F – 140°F
Maximum Load on VENT and Gh Outputs	10 VA @ 30 VAC max
Input Voltage	18-30 VAC
Controller Power Consumption	2.0 VA

MOUNTING THE CONTROLLER AND OUTDOOR TEMPERATURE SENSOR

MOUNTING TO AN 8140NC VENTILATOR

NOTE: In hot/humid climates where limiting ventilation with high indoor RH is important, mount the control to the return duct and mount the outdoor temperature sensor as shown on pages 6-9.

If humidity limits will not be used, then the control can be mounted to the housing of the Model 8140NC and the outdoor temperature sensor does not need to be installed:

1. Remove the wall plate from the control and put the rest of the control in a safe location until after wiring is completed.
2. Remove the sensor hole plug from the cover of the Model 8140NC.
3. Use the supplied #8 x 1/2" hex head sheet metal screws to mount the wall plate to the cover of the Model 8140NC.

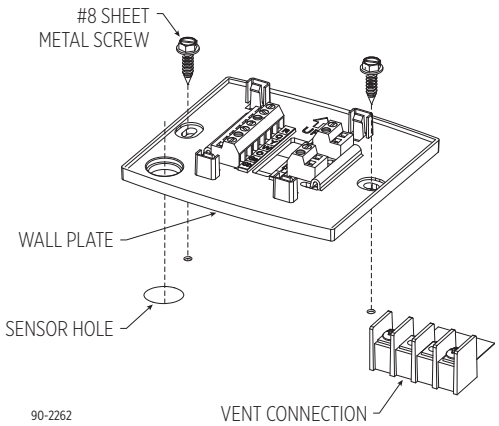

MOUNTING THE CONTROLLER TO THE RETURN DUCTWORK

NOTE: Mount the controller to the return ductwork at a location where the temperature and humidity in the duct is most representative of the home. Keep the controller at least 6" upstream from the point where the fresh air duct enters the return duct, and 6" upstream from a humidifier outlet.

Sheet Metal Installation

1. Remove the wall plate from the control and put the rest of the control in a safe location until after wiring is completed.
2. Mark the location of the wall plate sensor hole on the duct. Use a step-drill bit to create a 5/8" (.625") hole for the sensor.
3. Center the sensor hole in the wall plate over the hole in the duct, level the wall plate and mark the locations of the two mounting slots. Drill a small pilot hole using a #36 (.106") or smaller drill bit at the two mounting locations.
4. Use the supplied #8 standard hex head sheet metal screws to mount the wall plate to the duct.

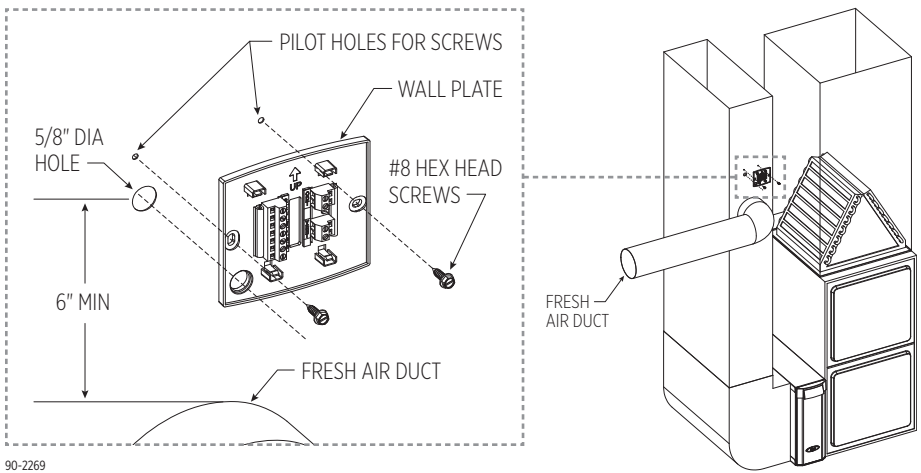

90-2269

Duct Board Installation

1. Take out the duct board mounting bracket, remove the wall plate from the control and put the rest of the control in a safe location until after wiring is completed.
2. Cut a 5.75" x 5.25" rectangular opening in the return plenum. Save the piece cut out to insulate the duct board bracket around the controller. The display of the control will run parallel with the long dimension. DO NOT MOUNT THE CONTROL IN A POSITION WHERE IT IS FACING DOWN.
3. Use the supplied #8 x 1/2" type 25 pan head screws to mount the control wall plate to the duct board mounting bracket.
4. Place the bracket in the cut out and seal in place using metal foil tape and/or mastic.
5. Insulate the duct board bracket around the wall plate using the plug cut out of the duct board.

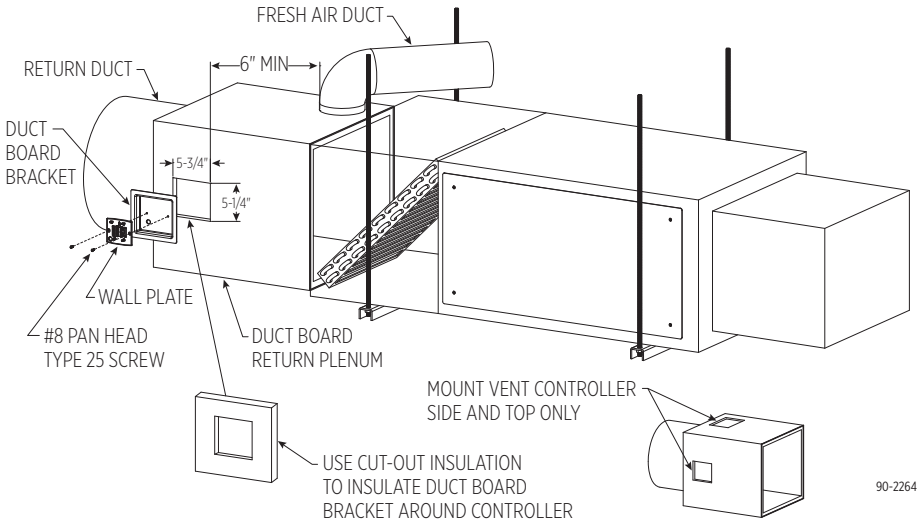

90-2264

MOUNTING THE CONTROLLER IN A CLOSET RETURN PLENUM

NOTE: Do not mount directly in the path of the outdoor air. Mount the control where it will sense the relative humidity of the return air.

1. Remove the wall plate from the control and put the rest of the control in a safe location until after wiring is complete.
2. Use spacers or brackets to mount the controller to an inside wall surface or return plenum/duct surface that is at room temperature (i.e. do not mount to supply ductwork or to the air handler/furnace) to space the wall bracket a minimum of ½" away from the surface.
3. Mount the wall bracket to the surface using #8 screws (field supplied – **do not use flat head screws)** and wall anchors (field supplied) if mounting to drywall. Ensure that there is room for air to flow behind the wall bracket. **DO NOT install screws in the wall bracket anywhere except intended mounting holes.**

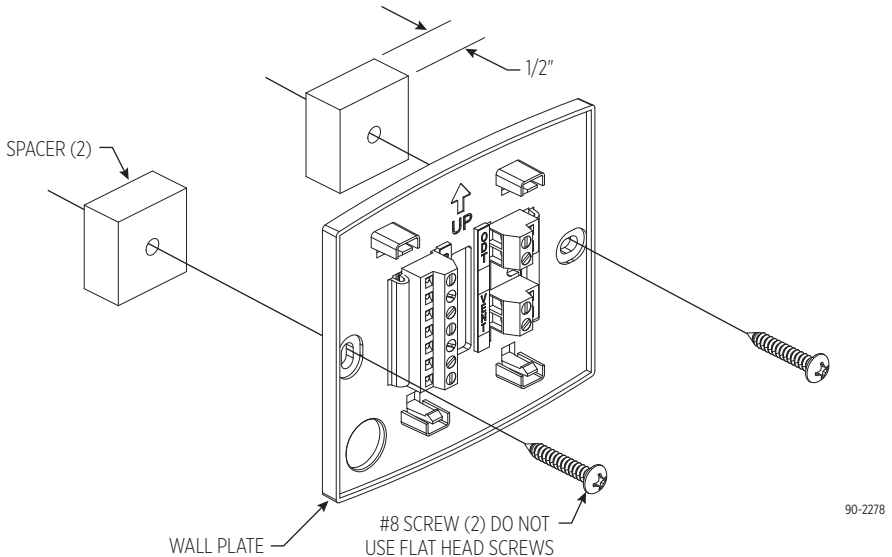

MOUNTING THE OUTDOOR TEMPERATURE SENSOR

1. Drill a 3/8" diameter hole in the duct of the fresh air inlet hood.
2. Install the outdoor temperature sensor into the duct and use metal foil tap to secure it in place and seal the opening. Run the wire toward the outside wall.
3. Secure ductwork to the inlet hood duct while allowing the wire of the sensor to extend outside of the insulation. Tape and/or mastic the duct as needed and properly insulate.

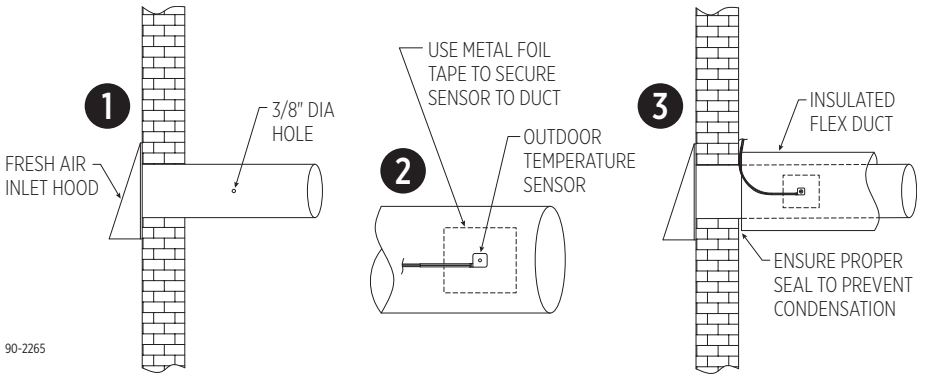

WIRING

Disconnect power to the HVAC system to prevent electrical shorts while wiring.

1. Run a 2-conductor cable from the control to the outdoor temperature sensor (if installed) and wire to the controller ODT terminals.
2. Run an 8-conductor thermostat cable from the control to the HVAC equipment. Wire the controller to the HVAC equipment in accordance with **FIGURE 1** or **FIGURE 2** diagram below. Contact customer service if wiring assistance is needed for other equipment configurations.
3. Run a 2-conductor cable from the control to either the damper in Model 8126X installations or to the Model 8140NC Fresh Air Ventilator and wire according to **FIGURE 3** or **FIGURE 4**.

FIGURE 1 – WIRING TO FURNACE

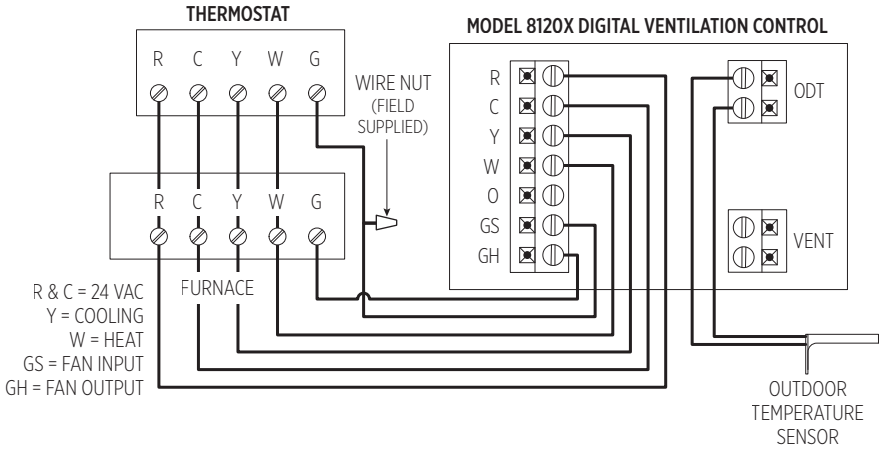

FIGURE 2 – WIRING TO HEAT PUMP

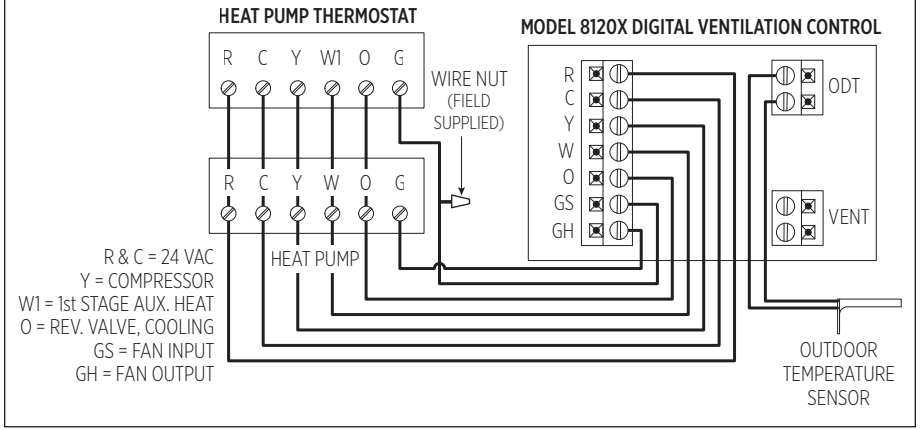

FIGURE 3 – WIRING TO MODEL 8140NC FRESH AIR VENTILATOR

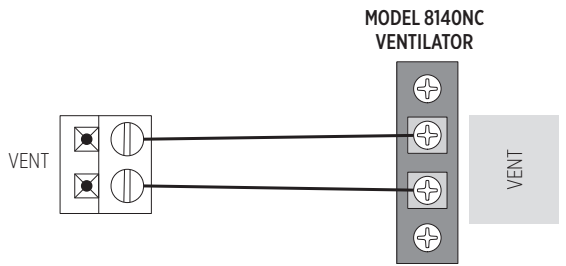

FIGURE 4 – WIRING TO MODEL 6506 DAMPER

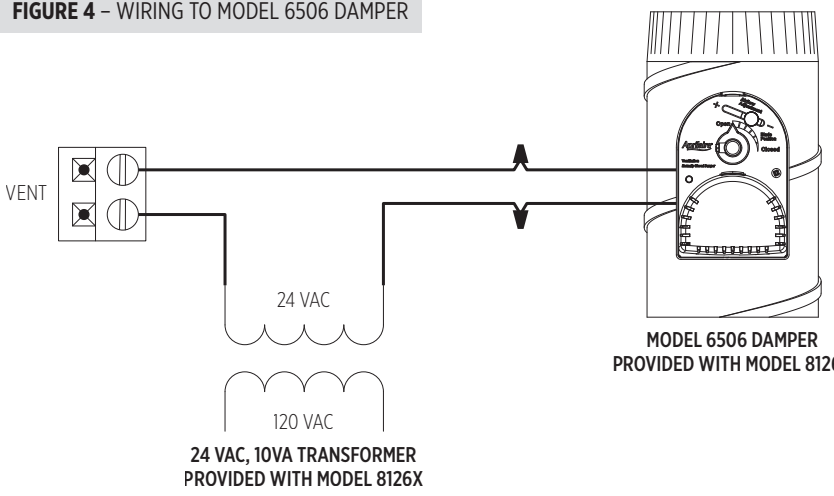

4. Route the wires into the channels in the back of the control to either the top or bottom of the control and snap the control onto the wall plate.
5. Restore power to the HVAC system when complete.

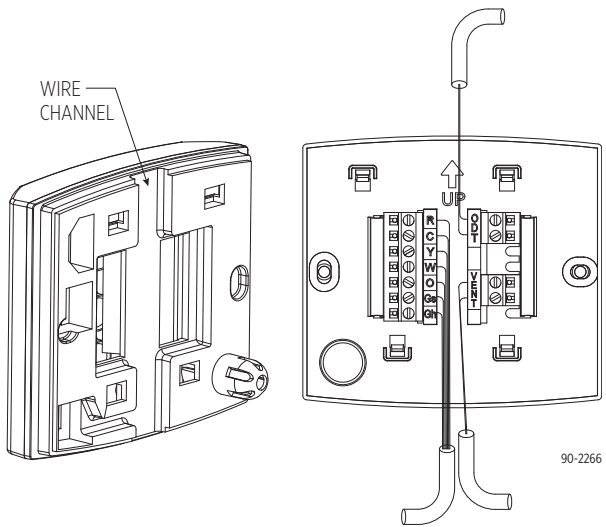

OPERATION

The display will appear faint normally; the first press of any button will turn on the display at full power.

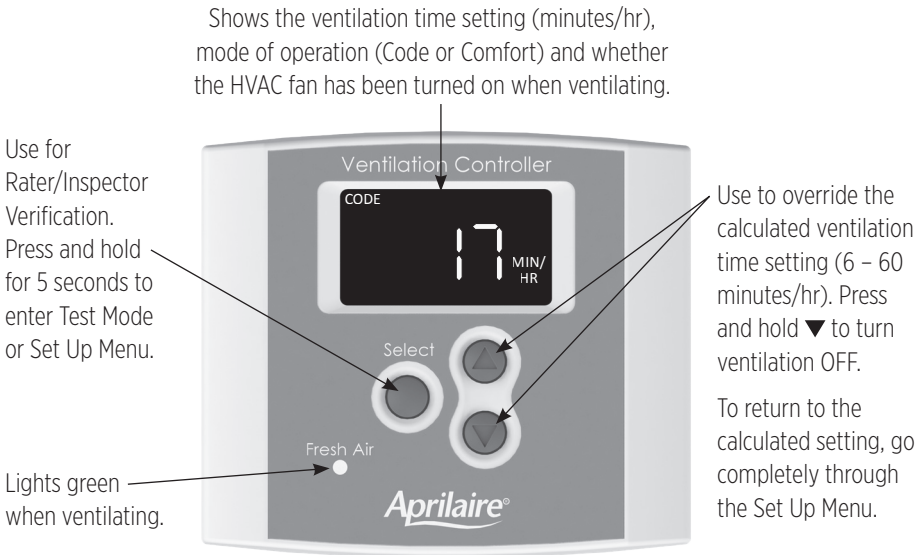

SET UP MENU

NOTICE

Before setting up the control for use, the amount of ventilation air being delivered (CFM) by the installed ventilation system must be measured.

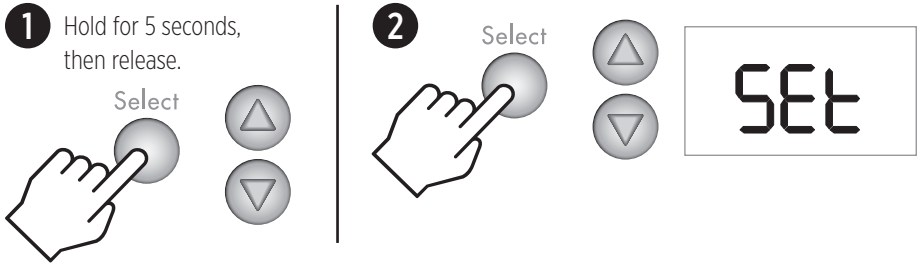

Throughout the Set Up Menu, the ▲ and ▼ buttons are used to change values, the **Select** button is used enter the value and move on to the next Set Up Menu item.

Menu Item	Values ▲▼	Description
	HP or HC	**HP** if wiring to a heat pump. **HC** if wiring to furnace and AC.
	1 – 10	**Number of bedrooms** – used to calculate required continuous ventilation rate.
	500 – 7500 ft2	**Square footage** – used to calculate required continuous ventilation rate.
	30 – 250 CFM	**Measured** outdoor **airflow** delivered during ventilation.
	OFF, 85°F – 105°F	**Ventilation high temperature limit.** Ventilation is limited when the outdoor temperature exceeds the setting. Turn OFF if no high limit is desired.
	OFF, -10°F – 40°F	**Ventilation low temperature limit.** Ventilation is limited when the outdoor temperature falls below the setting. Turn OFF if no low limit is desired.
	On, “bLnd”, OFF	**ON** HVAC fan turns on whenever ventilation occurs. **bLnd** (blend) HVAC fan turns on with ventilation only when the outdoor temperature is outside a set range. **OFF** HVAC fan is not turned on with ventilation.
	OFF, 60°F to 5°F less than Vent. High Temp. Limit	Only available when **bLnd** is selected. When the outdoor temperature is above the setting, the HVAC fan will be turned on to mix (blend) outdoor air with indoor air for tempering.

Menu Item	Values ▲▼	Description
	OFF, 5°F less than Vent. Low Temp. Limit to 55°F	Only available when **bLnd** is selected. When the outdoor temperature is below the setting, the HVAC fan will be turned on to mix (blend) outdoor air with indoor air for tempering.
	"codE", "cFrt"	**codE** No RH limits and any missed ventilation due to temperature is made up per ASHRAE 62.2-2010. **cFrt** (comfort) Adds indoor RH limits to ventilation; ventilation missed due to limits is not made up.
	OFF, 45% - 70% RH	Only available when **cFrt** is selected. When the indoor RH exceeds the setting, ventilation will not occur.
	OFF, 10% - 30% RH	Only available when **cFrt** is selected. When the indoor RH drops below the setting, ventilation will not occur.

When all Set Up Menu options have been entered, the control will display **donE**.

TEST MODE

After wiring and set up have been completed, Test Mode can be used to verify that all components in the ventilation system function and that wiring to the HVAC system fan is correct.

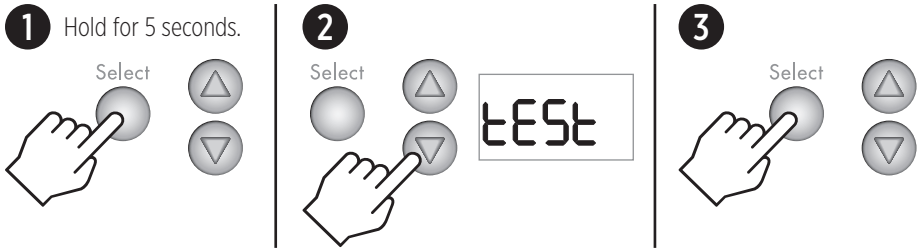

Test Sequence	Description
	Shows outdoor temperature as measured by the sensor wired to the ODT terminals. If **- - - - °F** shows, no outdoor temperature has been installed.
	**tESt** shows on the display, the green **Fresh Air** LED will light and either the damper will open or the power ventilator will turn on depending on what has been wired to the VENT terminals.
	After 15 seconds, the HVAC fan will turn on if it has been wired and set up to do so. The display will show **FAN** along with **tESt**.
	After 45 seconds Test Mode automatically completes and the display returns to the operating display.

RATER/INSPECTOR VERIFICATION

To verify the ventilation time setting, press the **Select** button to scroll through the calculated Required Continuous CFM and the Measured CFM for this installation. If any value does not match the expected value, the Set Up Menu must be entered to change the floor area, number of bedrooms or measured cfm.

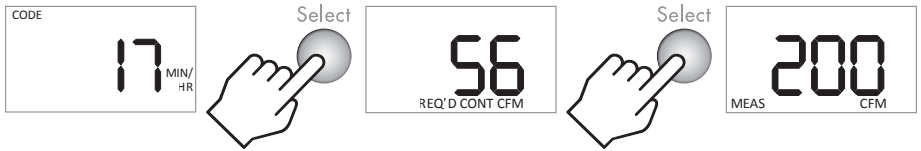

The calculation used for the ventilation time setting is (all calculations compliant with ASHRAE Standard 62.2-2010):

$$\textit{Minutes per Hour} = 60 * \left(\frac{\textit{Required Continuous CFM}}{\textit{Measured CFM}} \right)$$

Measured CFM is entered during set up and Required Continuous CFM is calculated according to the equation below:

$$\textit{Required Continuous CFM} = \left((\textit{Floor Area ft}^2 * .01) + (\textit{No. of Bedrooms} + 1) * 7.5 \right)$$

SEQUENCE OF OPERATION – "CODE" SETTING

The control will turn on ventilation with a heating, cooling or fan call for the set number of minutes during a one-hour cycle period. If the outdoor temperature is above the high temperature ventilation limit, ventilation will not occur with a cool or fan call, but if it is below the low temperature ventilation limit it will occur with a heat call. If the HVAC equipment does not turn on enough to meet the ventilation time within the hour, the control will turn on ventilation without a call, if the outdoor air temperature is within the high and low ventilation temperature limits. The control will also turn on the HVAC system blower, if wired and set up to do so.

If the outdoor temperature exceeds the limits set at the end of the first hour, then no additional ventilation will occur for another 60 minutes, and the cycle period will automatically adjust to four hours. When the ventilator starts again, it will sample the air temperature and if in range, will meet the set amount of ventilation during the four-hour cycle period. For example, if the Vent Time was set to 25 minutes per hour and the air temperature fell below the low limit setting ventilation would only occur during a heating call. If the heating only operated for 10 minutes during the hour, the control will automatically change the cycle period to four hours and work to provide the additional 90 total minutes of ventilation (25 min/hr * 4 hours = 100 minutes, minus the 10 minutes of ventilation that occurred during heating) during the four-hour cycle period.

If the air temperature is still out of range, the control will automatically switch to an 8-hour cycle period, then a 12-hour cycle period and finally a 24-hour cycle period. During 8, 12 and 24 hour cycle periods, the total ventilation time increases to compensate for ventilation effectiveness as defined in ASHRAE Standard 62.2-2010. When the cycle period automatically adjusts to 24-hours, the control will turn on ventilation to meet the requirements even if the temperature is outside of the set limits.

SEQUENCE OF OPERATION – "COMFORT" SETTING

The control will turn on ventilation with a heating, cooling or fan call by the HVAC equipment, if the outdoor air temperature is within the high and low ventilation temperature limits and the indoor RH is within the high and low RH limits, for the set number of minutes during a one-hour cycle period. If the HVAC equipment does not turn on enough to meet the ventilation time within the hour, the control will turn on ventilation without a call, if the outdoor air temperature and indoor RH is within the set limits. The control will also turn on the HVAC system blower, if wired and set up to do so. If the outdoor temperature or indoor RH are outside of the set limits, then no ventilation will occur.

LIMITED WARRANTY

Your Research Products Corporation Aprilaire® Digital Ventilation Controller is expressly warranted for five (5) years from date of installation to be free from defects in materials or workmanship.

Research Products Corporation's exclusive obligation under this warranty shall be to supply, without charge, a replacement for the Controller which is found to be defective within such five (5) year period and which is returned not later than thirty (30) days after said five (5) year period by you to either your original supplier or to Research Products Corporation, Madison, Wisconsin 53701, together with the installation date of the controller.

THIS WARRANTY SHALL NOT OBLIGATE RESEARCH PRODUCTS CORPORATION FOR ANY LABOR COSTS AND SHALL NOT APPLY TO DEFECTS IN WORKMANSHIP OR MATERIALS FURNISHED BY YOUR INSTALLER AS CONTRASTED TO DEFECTS IN THE CONTROLLER ITSELF.

IMPLIED WARRANTIES OF MERCHANTABILITY OR FITNESS FOR A PARTICULAR PURPOSE SHALL BE LIMITED IN DURATION TO THE AFORESAID FIVE YEAR PERIOD. RESEARCH PRODUCTS CORPORATION'S LIABILITY FOR INCIDENTAL OR CONSEQUENTIAL DAMAGES, OTHER THAN DAMAGES FOR PERSONAL INJURIES, RESULTING FROM ANY BREACH OF THE AFORESAID IMPLIED WARRANTIES OR THE ABOVE LIMITED WARRANTY IS EXPRESSLY EXCLUDED. THIS LIMITED WARRANTY IS VOID IF DEFECT(S) RESULT FROM FAILURE TO HAVE THIS UNIT INSTALLED BY A QUALIFIED HEATING AND AIR CONDITIONING CONTRACTOR. IF THE LIMITED WARRANTY IS VOID DUE TO FAILURE TO USE A QUALIFIED CONTRACTOR, ALL DISCLAIMERS OF IMPLIED WARRANTIES SHALL BE EFFECTIVE UPON INSTALLATION.

Some states do not allow limitations on how long an implied warranty lasts or the exclusion or limitation of incidental or consequential damages so the above exclusion or limitations may not apply to you.

This warranty gives you specific legal rights and you may also have other rights which vary from state to state.

WARRANTY REGISTRATION

Visit us online at **www.aprilaire.com** to register your Aprilaire product. If you do not have online access, please mail a postcard with your name, address, phone number, email address, product purchased, model number, date of purchase, and dealer name and address to: Research Products Corporation, P.O. Box 1467, Madison, WI 53701.

Your warranty registration information will not be sold or shared outside of this company.

AprilairePartners.com
P.O. Box 1467
Madison, WI 53701-1467
800.334.6011 F: 608.257.4357
Printed in USA
©2018 **Aprilaire – Division of Research Products Corporation**
61001433 B2207176D 3.18

Aprilaire®