INSTRUCTIONS FOR INSTALLING WALL-MOUNT SPEED CONTROL

Safety Warning! Please Read Carefully

Control should be installed by a qualified electrician in accordance with the National Electrical Code and other local codes which may apply. This control must be grounded when installed. Failure to follow these instructions may result in electrical shock or a fire hazard. To reduce the risk of fire or electric shock, this control is to be used only with fans marked as suitable for use with solid state speed controls. This control is suitable for mounting in a metal or polymeric field enclosure. These controls must not be used at ratings exceeding those clearly marked on the device.

We are not responsible for any expense, inconvenience or subsequent damage c aused by items of our manufacture or sale.

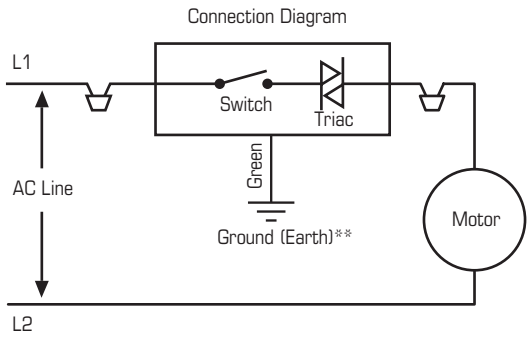

1 Application

a) Motor Type – Shaded Pole, P.S.C., and Universal.
b) Required Load – Fans, Blowers and Speed Dependent Loads.

2 Wiring

Warning! Power must be turned off before wiring. Connect control in series with motor and line voltage; never connect control across line.

Ground (Earth)** – Be sure to ground control using the green wire.

**Some models do not require grounding, therefore, a ground wire is not provided.

3 Mounting

a) Use 2" deep standard electrical box.
b) Secure control with outer bracket tabs.

4 Minimum Speed Adjustment

Important: If this option is not supplied, disregard Step 4 and continue to Step 5.

This control was designed to operate on motors used in diverse applications. A minimum speed adjustment is provided to allow independent control of the minimum speed setting. Minimum speed adjustment ensures motor runs with sufficient torque to prevent stalling.

a) Motor must be in actual operating condition to achieve proper speed adjustment. Motor will not slow down unless proper load is applied.
b) Turn main control knob to lowest speed position.
c) Locate and adjust minimum speed setting on front plate with screw driver (rotate clockwise to decrease minimum speed; counter-clockwise to increase minimum speed).

Special Note: For 2.5 and 3.0 Amp models, adjustment of minimum speed is reversed. Rotate clockwise to increase minimum speed; deccounter-clockwise to rease minimum speed.

On some models minimum speed adjustment hole is located on side of control.

d) Motor will now operate from this preset minimum speed to full speed.

5 Final Mounting

a) Install front dial plate (remove protective plastic on face of dial plate).
b) Turn main control until switch snaps off. (Switch models only).
c) Push on knob so that pointer is in "off" position.

* Ground wire is not counted when designating 2,3 or 4 wire controls.

**Be sure to ground control using the green wire. Some models do not require grounding, therefore, a ground wire is not provided.

United States • 1.800.747.1762 • www.fantech.net
Canada • 1.800.565.3548 • www.fantech.ca

Fantech reserves the right to make technical changes.
For updated documentation please refer to **www.fantech.net**

fantech®
a systemair company

(A40001) – Rev. F – 6/1/2011