Small Rooftop Units
7.5 to 10 Tons
Low Ambient Control Kit Accessory

Installation Instructions

Part No. CRLAMBKT002A00

IMPORTANT: Read these instructions completely before attempting to install this accessory.

SAFETY CONSIDERATIONS

Installation of this accessory can be hazardous due to system pressures, electrical components, and equipment location (such as a roof or elevated structure). Only trained, qualified installers and service technicians should install, start-up, and service this equipment.

When installing this accessory, observe precautions in the literature, labels attached to the equipment, and any other safety precautions that apply:

- Follow all safety codes
- Wear safety glasses and work gloves
- Use care in handling and installing this accessory

It is important to recognize safety information. This is the safety-alert symbol: ⚠. When you see this symbol on the unit and in instructions or manuals, be alert to the potential for personal injury.

Understand the signal words DANGER, WARNING, CAUTION, and NOTE. These words are used with the safety-alert symbol. DANGER identifies the most serious hazards which **will** result in severe personal injury or death. WARNING signifies hazards which **could** result in personal injury or death. CAUTION is used to identify unsafe practices, which **may** result in minor personal injury or product and property damage. NOTE is used to highlight suggestions which **will** result in enhanced installation, reliability, or operation.

⚠ WARNING

ELECTRICAL OPERATION HAZARD

Failure to follow this warning could result in personal injury or death.

Disconnect power supply and install lockout tag before attempting to install accessory.

⚠ WARNING

ELECTRICAL SHOCK HAZARD

Failure to follow this warning could cause personal injury or death.

Before performing service or maintenance operations on unit, turn off main power switch to unit and install lock(s) and lockout tag(s). Ensure electrical service to rooftop unit agrees with voltage and amperage listed on the unit rating plate. Unit may have more than one power switch.

BEFORE INSTALLATION

Inspect the contents of this accessory package before installing. File a claim with the shipping provider if contents are damaged or parts are missing. (See Tables 1 and 2.)

GENERAL

The head pressure control kit regulates outdoor (condenser) fan speed during cooling mode operation. A temperature sensor mounted on a return bend of the outdoor (condenser) coil controls the speed of approved outdoor fan motors in order to maintain a constant head pressure in the outdoor coil. For the approved fan motors see Table 2. The control is connected to two outdoor fan motors.

When properly installed, the control will maintain the appropriate head pressure at low ambient temperatures between 40°F (4.4°C) and 0°F (–17.8°C). The controller will not be activated until the outside air temperature is below 60°F (15.5°C). The unit without the low ambient kit is rated for 40°F (4.4°C) outside air.

The controller is designed to apply full voltage to the motor with probe temperatures above 100°F (37.8°C) or if the outside air is above 60°F (15.5°C). With probe temperatures between 100°F (37.8°C) and 70°F (21.1°C) and outdoor air below 60°F (15.5°C), the motor speed is proportional to the probe temperature. As the temperature being sensed decreases, the output voltage decreases. With probe temperature below 70°F (21.1°C), the motor will remain off. If the cut-out speed knob is not set to minimum, the motor may cut out sooner and at a higher probe temperature than 70°F (21.1°C), limiting the motor's modulation range. Once the probe temperature increases above 70°F (21.1°C), the motor will restart to the hard start knob setting. The hard start setting allows the motor to begin at a higher RPM upon restart than the RPM corresponding to the probe's temperature. This avoids low RPMs of the condenser motor.

The head pressure control kit in this application is only to be used with an approved condenser motor. The hard start knob setting and the cut-out speed knob are to be set to minimum for proper functionality. See Fig. 1 and Table 1 for controller kit details.

575-v Units Only

On 575-v units, the 575-v factory-installed outdoor (condenser) motor is replaced with a 460-v approved fan motor. This is powered through an Auto-transformer (buck boost) to convert 575-v to 460-v and uses the 460-v connection on the controller. Follow these instructions to installing the motors and head pressure controller. See the additional transformer kit instructions for transformer installation. Refer to Kit CRTRXKIT003A00 accessory for details on installation.

⚠WARNING

CUT HAZARD

Failure to follow this caution may result in personal injury.

Sheet metal parts may have sharp edges or burrs. Use care and wear appropriate protective clothing, safety glasses and gloves when handling parts and servicing air conditioning equipment.

⚠WARNING

ELECTRICAL SHOCK HAZARD

Failure to follow this warning could result in personal injury or death.

Before installation or servicing system, always turn off main power to system and install lockout tag. Unit may have more than one disconnect switch. Turn off the accessory heater power switch, if applicable.

Table 1 — Package Contents (CRLAMBKT002A00)

PART DESCRIPTION	PART QUANTITY	REFERENCE NUMBER
CONTROLLER ASSEMBLY	1	A
MOUNTING SCREWS	4	B
BRACKETS	2	C
BRACKET SCREWS	4	D
HIGH VOLTAGE HARNESS	1	E
LOW VOLTAGE HARNESS	1	F
WHITE WIRE HARNESS	1	G
TERMINAL BLOCK	1	H
TERMINAL BLOCK SCREWS	1	I
INSTRUCTIONS	1	—
INSULATION TAPE	2 in.	—
WIRE TIE	4	—

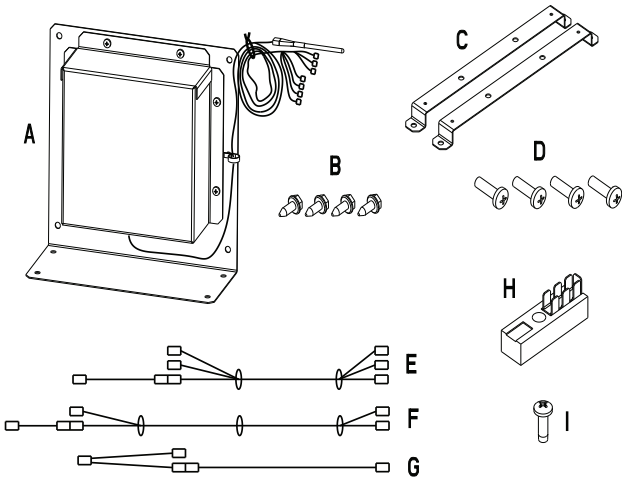

Fig. 1 — Controller Assembly Kit Details

IMPORTANT: This accessory is designed for specific model small rooftop units. Refer to Table 2 for valid model-size applications.
DO NOT ATEMPT TO INSTALL ON MODELS AND SIZES NOT INCLUDED IN THE PRODUCT USAGE TABLE.
The use of this kit is only intended for use with the condenser motor, capacitor, and winter start kit accessory in Table 2.

INSTALLATION

48/50FC 08-12, 582K/559K 08-12, RGV/RAV 08-12 (Size Units)

1. Disconnect power to the unit. Lockout/tag-out unit disconnect switch.
2. Open and remove the access panel and cover to the main control box.
3. Use a voltmeter to check that no power is present at unit terminal block.
4. Disconnect condenser motor wires from control box connections. See Fig. 2 for connections.
   a. For 230-v units, remove the black wire from the Outdoor Fan Relay (OFR.OFR1) terminal 2.
   b. For 460-v and 575-v units, remove the black wire from the Outdoor Fan Relay (OFR/OFR1) terminal 2 and remove the black wire from the Low Ambient Relay (LAR.OFR2) terminal 2.
   c. For all units: Remove brown and yellow motor wires from the condenser motor capacitor. Carefully remove harness ends from control box.
5. Remove the motor assembly from the top cover and install matching condenser motor as suggested in Table 2. Route new motor harness to control box following the same path as preceding motor. At this time, also replace the condenser capacitor in the control box if required by Table 2.

Table 2 — Product Usage

UNIT MODEL NUMBER	UNIT VOLTAGE	MOTOR P/N	CAPACITOR P/N	TRANSFORMER P/N	LOW AMBIENT KIT ACCESSORY	WINTER START KIT ACCESSORY
48/50FC* 08-12 582K/559K 08-12 RGV/RAV 090-120	208/230-3-60	(1) HC40GE233	Keep factory-installed option	n/a	(1) CRLAMBKT001A01	(1) CRWINSTR001A00
	460-3-60	(2) HC40GE463	Replace with HC93CA013	n/a		
	575-3-60			CRTRXKIT003A00†		

†CRTRXKIT003A00 can be purchased separately.

6. Connect the yellow and brown wires from the new motor(s) to the condenser capacitor. Connect the black wires to the same location removed in Step 4 and Fig. 2.
7. Install the controller assembly (refer to A in Fig. 1) in the location shown in Fig. 3. Use the included self tapping screws as needed. Refer to B in Fig. 1.

IMPORTANT: Do not screw into the base pan of the unit. Only screw into the compressor plate.

8. On 208/230-v units, remove the controller assembly cover and relocate the yellow wire on Line 1 of the controller. The assembly is shipped with the yellow wire connected to the 480-v Line 1 terminal and needs to be moved to the 240-v Line 1 terminal.

IMPORTANT: When installing on 230-v units, the YEL quick connect on the head pressure controller needs to be switched from 480-v Line 1 connection. Refer to Fig. 4-6 for wiring schematics.

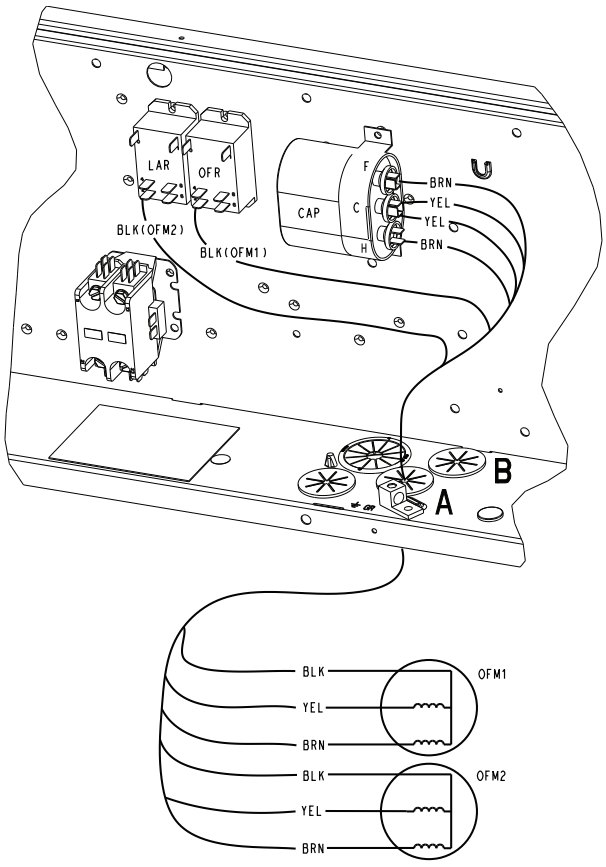

Fig. 2 — Motor Wiring Inside Control Box

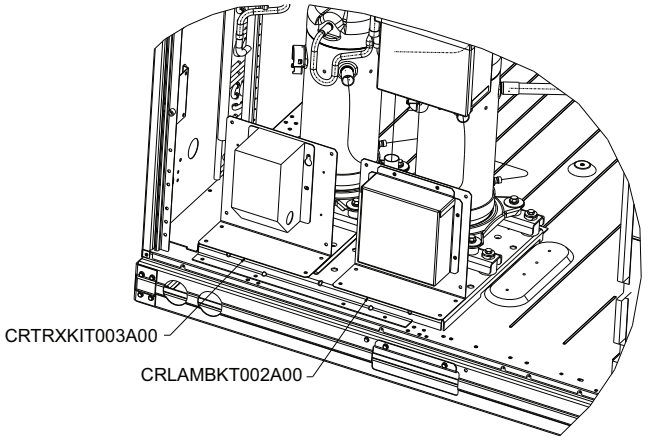

Fig. 3 — Controller and Transformer Installation Locations

9. Install High Voltage (HV) wire harness. Refer to E in Fig. 1.
   a. Route HV harness through the hole marked "B" in Fig. 2, with the heat shrink yellow wire end going into the control box.
   b. Locate the black wire that runs from the compressor contactor line side to the OFR/OFR1 terminal 4.
   NOTE: Disconnect this wire at the compressor contactor side.
   c. Connect the black wire with a male quick connect terminal in the HC harness to this now loose black wire.
   d. Attach the yellow wire with heat shrink terminal to the capacitor (CAP1) as shown in Fig. 4.
   NOTE: On 575-v units, locate the yellow wire that connects the compressor contactor to CAP1. Remove this wire or disconnect on both ends and tape off.
   e. Attach the black wire with a female quick connect to the compressor contactor line side as shown in Fig. 4.
   f. Route the other end of this HV harness to the controller assembly mounted in Step 7 and mate the 2 black and yellow wires to the opposite gender black and yellow wires coming from the controller assembly.
10. Install Low Voltage (LV) wire harness. Refer to F in Fig. 1.
   a. Route LV harness through the 2nd hole from the right, in the bottom of the control box with the female quick connect ends going into the control box.
   b. On units with Unit Control Board (UCB), connect the red and brown female quick connects to the terminals on the UCB marked R and C respectively.
   c. On units with SystemVu™ controls, disconnect and discard the small brown wire extension so that the red and brown wires now have the same size female quick connects. Connect these to the small terminal block (TB4) in the control box. Refer to unit wiring diagram to locate the TB4 if needed.
   d. Route the other end of this LV harness to the controller assembly mounted in Step 7 and mate the red and brown wires with the red and brown wires coming from the controller assembly.

11. Install white wire harness. Refer to G in Fig. 1.
    a. Route the white wire harness through the same hole as the LV harness in Step 10, with the "2-in-1" orange and white end in the control box.
    b. On units with a UCB, locate the Low Ambient Relay (LAR) in the control box and remove the white wire connected to the terminal 1. Connect the "2-in-1" orange and white wire to the LAR terminal 1 and connect the loose white wire just disconnected to the single orange wire.
    c. On SystemVu™ units, disconnect the "2-in-1" short piece of wire on this white wire harness and discard the "2-in-1" wires. Connect the white male quick connect end to the loose white female wire hanging above the SystemVu™ board top edge connectors.
    d. Route the other end of the white wire harness to the controller assembly mounted in Step 7 and mate the white wire to the one coming from the controller assembly.
12. Ensure wiring is as shown in Fig. 4-6.
    NOTE: The pink/black wire from the controller assembly is not used.
    a. For 48/50FC, 582K/559K, and RGV/RAV units with standard controls only: on the low voltage harness, the pink wire and the pink/black wire are unused. Insulate the connection ends of the pink/black wire on the controller's harness.
13. On 575-v units, refer to the transformer kit instructions for details on how to wire the transformer into the unit to match Fig. 6.

IMPORTANT: The transformer as wired in Fig. 6 has BLK to YEL=575-v and BLK to WHT=460-v.

⚠ CAUTION

Transformer kit (CRTRXKIT003A00) and wiring requires 460-v motors to be installed. Failure to replace with the proper voltage motors will result in electrical failure.

14. Install the controller's sensor on the outdoor condenser coil. (See Fig. 7.) When installing the sensor, use the included 2 in. insulation tape and wire tie to secure the sensor to the coil header.
15. Install the winter start accessory kit CRWINSTR001A00 per the kit instructions.
16. Fabricate and install wind baffles. Refer to Fig. 8 and Table 3 on page 7.
17. For units with SystemVu, configure unit to adjust the outdoor air lockout temperature. When the unit is powered up, go to ***Settings → Unit Configurations → Cooling → Low Ambient → Cir.A Lockout OAT***. The default value of the Circuit A Lockout Temperature is 40. Change this value to 0 so the unit can operate correctly with low ambient controls.

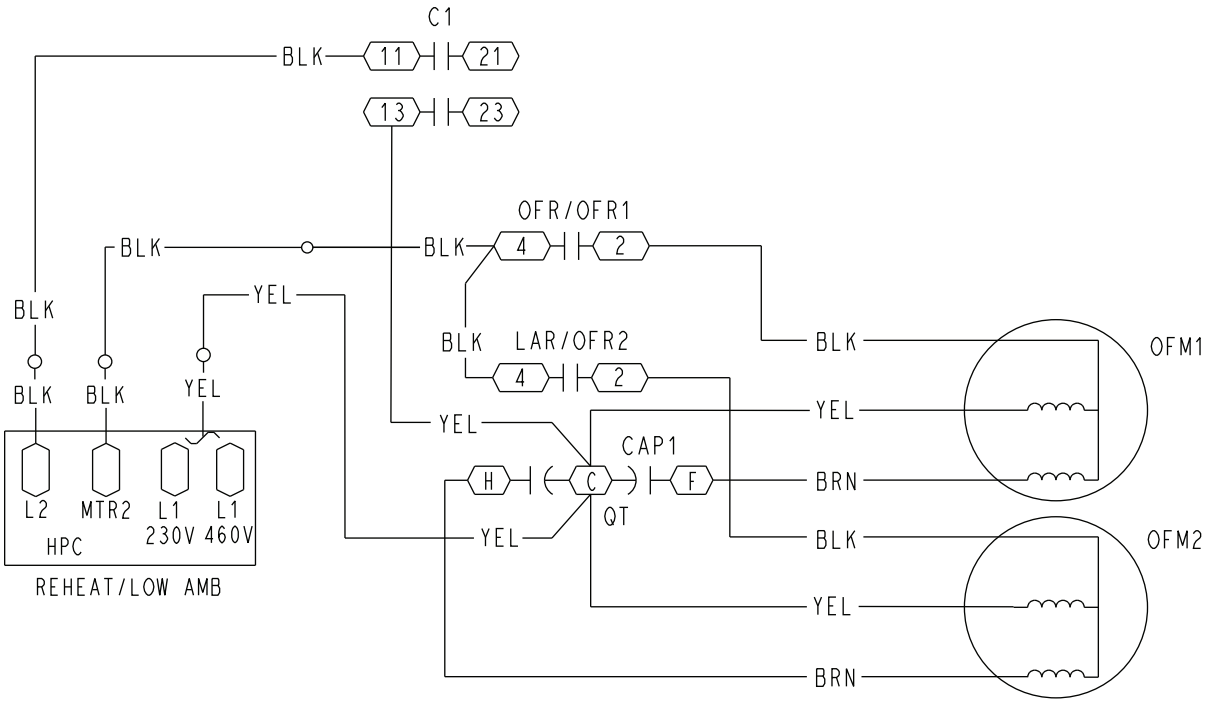

Fig. 4 — High Voltage Wiring Diagram for 48/50FC, 582K/559K, RGV/RAV (208/230-v and 460-v)

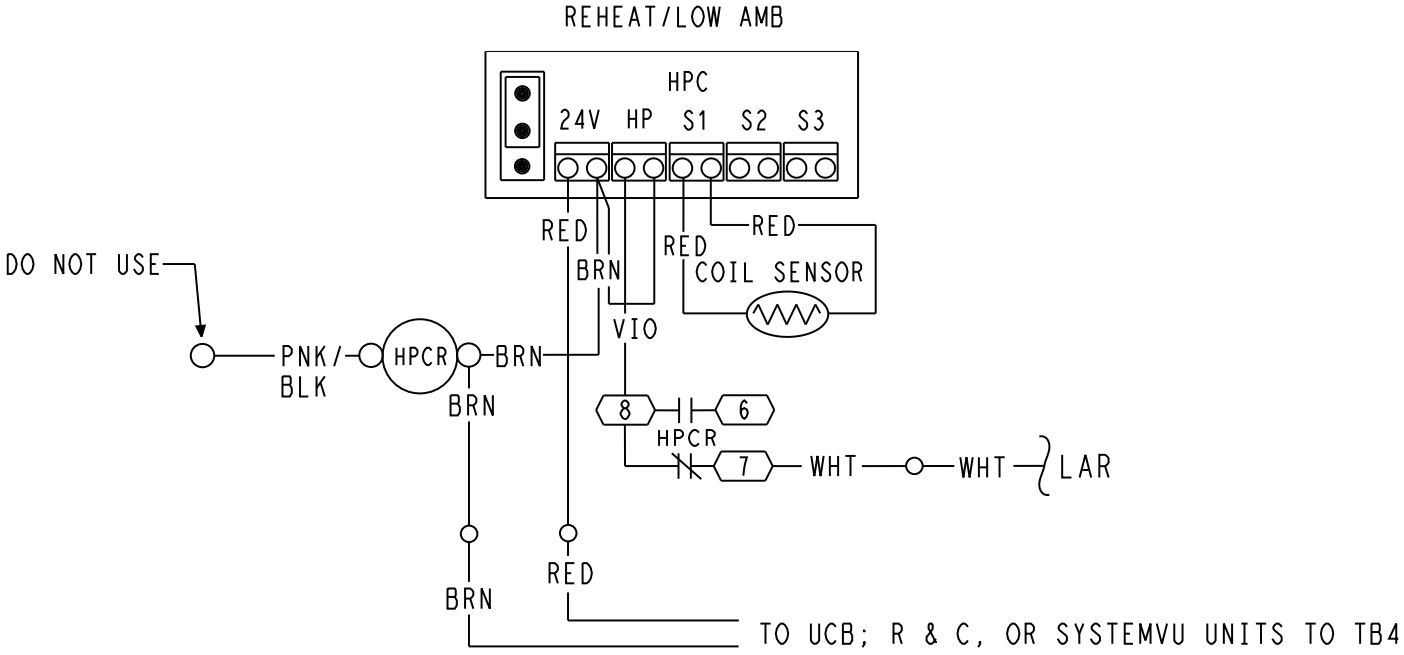

Fig. 5 — Low Voltage Wiring for 48/50FC, 582K/559K, RGV/RAV

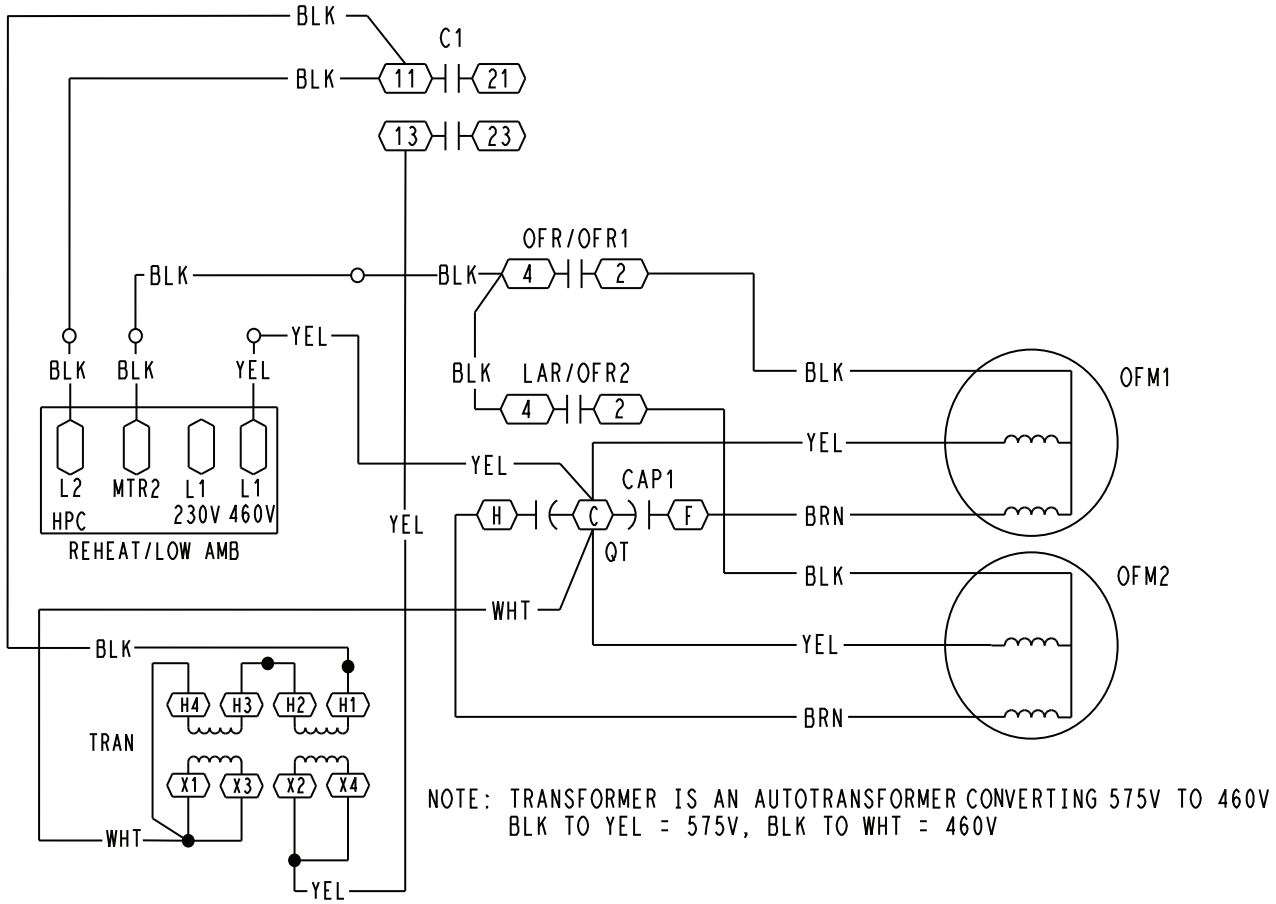

Fig. 6 — High Voltage Wiring Diagram for 48/50FC, 582K/559K, RGV/RAV (575-v)

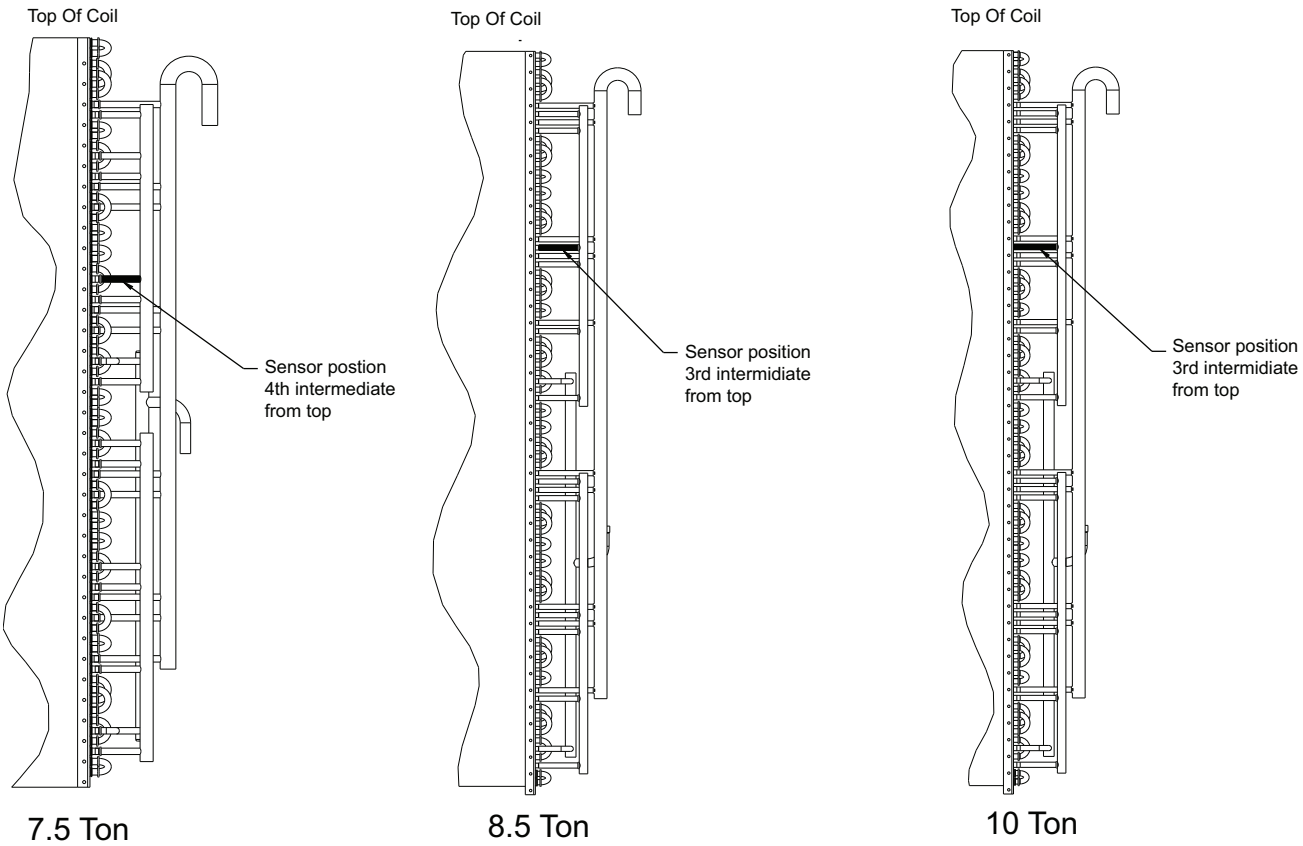

Fig. 7 — Sensor Locations for 48/50FC, 582K/559K, RGV/RAV

FABRICATE WIND BAFFLES

Wind baffles are required to prevent wind cross-currents from causing abnormally low condensing temperatures. Fabricate sheet metal baffles using Table 3 as shown in Fig. 8. Use 20 gauge sheet metal for the baffle material. Refer to Table 3 for wind baffle dimensions according to unit type and size.

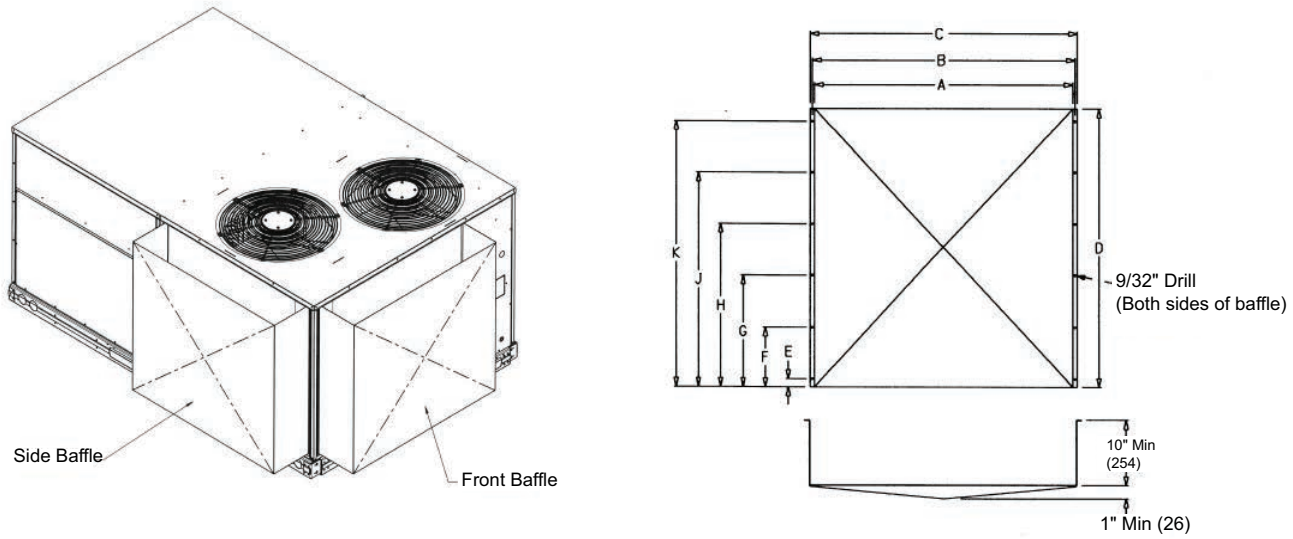

Fig. 8 — Wind Baffle Fabrication

Table 3 — Wind Baffle Dimensions (48/50FC, 582K/559K, RGV/RAV Units)

UNIT	SIZE	FRONT BAFFLE - in. (mm)									
		A	B	C	D	E	F	G	H	J	K
48/50FC 582K/559K RGV/RAV	08	40-5/8 (1031.9)	41-1/8 (1057.3)	41-5/8 (1057.3)	35-3/8 (904.9)	1-1/4 (31.8)	9-1/4 (235.0)	17-1/4 (438.2)	25-1/4 (641.4)	33-1/4 (844.6)	N/A
48/50FC 582K/559K RGV/RAV	09	28-5/8 (727.1)	29-1/9 (739.8)	29-5/8 (752.5)	43-3/8 (1108.1)	1-1/4 (31.8)	9-1/4 (235.0)	17-1/4 (438.2)	25-1/4 (641.4)	33-1/4 (844.6)	41-1/4 (1047.8)
48/50FC 582K/559K RGV/RAV	12	40-5/8 (1031.9)	41-1/8 (1044.6)	41-5/8 (1057.3)	43-3/8 (1108.1)	1-1/4 (31.8)	9-1/4 (235.0)	17-1/4 (438.2)	25-1/4 (641.4)	33-1/4 (844.6)	41-1/4 (1047.8)

UNIT	SIZE	SIDE BAFFLE - in. (mm)									
		A	B	C	D	E	F	G	H	J	K
48/50FC 582K/559K RGV/RAV	08	40-7/8 (1038.2)	41-1/8 (1057.3)	41-7/8 (1063.6)	35-3/8 (904.9)	4-1/4 (108.0)	11-1/4 (285.8)	18-1/4 (463.6)	25-1/4 (641.4)	32-1/4 (819/4)	N/A
48/50FC 582K/559K RGV/RAV	09	40-7/8 (1038.2)	41-1/8 (1057.3)	41-1/8 (1057.3)	43-3/8 (1108.1)	4-1/4 (108.0)	11-1/4 (285.8)	18-1/4 (463.6)	25-1/4 (641.4	32-1/4 (819/4)	39-3/16 (995.4)
48/50FC 582K/559K RGV/RAV	12	40-7/8 (1038.2)	41-1/8 (1057.3)	41-1/8 (1057.3)	43-3/8 (1108.1)	4-1/4 (108.0)	11-1/4 (285.8)	18-1/4 (463.6)	25-1/4 (641.4	32-1/4 (819/4)	39-3/16 (995.4)

© 2021 Carrier

Manufacturer reserves the right to discontinue, or change at any time, specifications or designs without notice and without incurring obligations.

Catalog No. 04-53480361-01 Printed in U.S.A. Form IIK-CRLAMBKT02-01 Pg 8 12-21 Replaces: NEW