0NVINSCOM

# NovaVent®

## INSTALLATION AND MAINTENANCE INSTRUCTIONS

### 3"- 5" SINGLE WALL SPECIAL

### STAINLESS STEEL VENTING SYSTEM

### FOR GAS BURNING APPLIANCES

### CATEGORY I, II, III, & IV

c UL us LISTED

### UL1738 & ULC-S636

## Read the following before installation of venting system.

* Examine all components for possible shipping damage prior to installation. *
* The vent system must be free to expand and contract. Check for unrestricted vent movement through walls, ceilings and roof penetrations. *
* The vent system **must** be properly supported **"DURING ASSEMBLY"** vertically & horizontally as prescribed in this manual. Failure to support the components at the point of install will cause undue stress on the joints of the components and fittings thereby voiding warranty.
* Proper joint assembly is essential for a safe installation. Follow these instructions exactly as written. Check the connection of all joints during and after completion of assembly for proper insertion depth and check gear clamps of single wall vents for proper torque.*
* Different manufacturers have different joint systems and adhesives. Do Not Mix Pipe, Fittings or Joining methods from different manufacturers beyond the flue collar adaptor. *

**WARNING! CONDENSATION WITH HIGH ACID CONTENT MAY BE PRODUCED DUE TO UNFORESEEN CONDITIONS. THE HEATING APPLIANCE AND VENTING SYSTEM SHOULD BE INSPECTED BY A LICENSED CONTRACTOR ON AN ANNUAL BASIS FOR POSSIBLE SIGNS OF DETERIORATION DUE TO RUSTING OR PIN HOLES. CONDENSATION WITH HIGH ACID CONTENT WITH PH LEVELS BELOW 2.5 MAY CAUSE LEAKAGE OF HARMFUL GASES WHICH CAN CAUSE NAUSEA, FAINTING OR DEATH. IF APPLIANCE PH LEVEL IS BELOW 2.5 OR DETERIORATION IS DETECTED, IMMEDIATELY CEASE USE OF THE HEATING SYSTEM AND CALL FURNACE / BOILER INSTALLER FOR REMEDIAL ACTION.**

**IMPORTANT: The qualified installing contractor must leave this instruction with the end-user along with a vent layout drawing of the install detailing the entire vent system including all enclosures, access doors, condensate drains etc. The installer shall instruct the end-user on how to check the condensate drains periodically and if required, how to fill with water.**

**WARNING!**

**A by-product of any fuel burning appliance is carbon monoxide, which is an invisible and odorless gas. Read, understand and follow all instructions and appropriate local codes when installing, using or maintaining any fuel burning appliance and vent system. Install carbon monoxide detector and alarms in accordance with local codes.**

The information provided within is for informational purposes only. We have made every effort to ensure the accuracy of the provided information and assume no responsibility for any loss or damage due to errors or omissions or to the use or misuse of any information supplied. It is impossible to test all products under all conditions to which they might be subjected in the field. It is therefore the buyer and/or end users' responsibility to test all products under the conditions that duplicate the service conditions prior to installation. All improvements, all specifications are subject to change without prior notice. It is the buyer and/or end users' responsibility to review our complete Terms and Conditions of Sale located on our web sites at: www.novaflex.com | www.z-flex.com | www.flexmaster.com.

**CANADA:**
FLEXMASTER CANADA LTD.
452 ATTWELL DR.
ETOBICOKE, ONTARIO
M9W 5C3
(416) 679-0045

**U.S.A.:**
Z-FLEX® US, INC.
20 COMMERCE PARK, NORTH
BEDFORD, N.H.
03110-6911
1(800) 654-5600

Visit our web site at www.z-flex.com

# Table of

| Contents | Page no. |
|---|---|
| Hazard Definitions | 2 |
| Contaminants Notice | 3 |
| Observations to Note | 3 |
| Minimum Clearances to Vent Termination | 3-4 |
| Joint Procedure | 5 |
| Clearances to Combustible Materials | 6 |
| Horizontal / Side Wall Venting Installation | 6-7 |
| Vent Pipe Slope | 7 |
| How to Cut Pipe | 8 |
| Adjustable | 8-9 |
| Condensate Tube / Drain Tee Installation | 9-10 |
| Support Systems | 10-11 |
| Vertical Venting Installation | 11-12 |
| Installing Firestop Spacer / Support | 12-13 |
| Installing Vent Pipe Into an Existing Masonry Chimney | 14 |
| Special fittings | 15-16 |
| Typical Vertical Vent Illustrations & Associated Supports | 17-18 |
| Warranty | 20 |

## Hazard Definitions

The following terms are used throughout this Installation Guide to bring attention to potential hazards of varying risk levels or to important information concerning the product and / or its use.

**DANGER!** — **Indicates the presence of a hazardous situation which, if ignored, will result in death, serious injury or substantial property damage.**

**WARNING!** — **Indicates a potentially hazardous situation which, if ignored, can result in death, serious injury or substantial property damage.**

**CAUTION!** — **Indicates a potentially hazardous situation which, if ignored, may result in minor injury or property damage.**

**NOTICE** — **Indicates special instructions on installation, operation or maintenance, which are important to equipment but not related to personal injury hazards.**

# Contaminants Notice

It is understood that all appliances requiring inside combustion air must have sufficient supply of the air for proper combustion of the fuel air mixture within the appliance. What may not be understood is this supply of air shall be free of corrosive contaminants. Air mixture containing corrosive contaminants when under fire through the combustion process of the appliance produces exhaust gases containing these corrosive contaminants. These contaminants are prevalent in the condensate of these gases throughout the vent system and will eventually damage the vent material. Refer to Table 1 for listing of products.

The supply air to the heating appliance shall be free of any contaminants. Heating appliances installed in areas where the supply air is contaminated shall have clean combustion air piped directly to the unit.

| PRODUCTS THAT WILL CONTAMINATE THE COMBUSTION AIR SUPPLY IN THE MECHANICAL ROOM | |
|---|---|
| Salts – Sodium Chloride used in water softeners | Adhesives, cements, glues used to fasten building products |
| Dirty air due to renovation / construction | Solvents containing Hydrochloric acid / Muriatic acid |
| Chlorine based swimming pool chemicals | Chlorinated waxes and/or cleaners |
| Chlorine type bleaches, cleaning solvents, laundry detergents | Aerosol sprays containing Chlorofluorocarbons (CFC's) |
| Fabric softeners used in clothes dryers | Paint & varnish and remover solvents |
| Permanent wave hair product solutions | Refrigerant leaks |

**Table 1: Corrosive Contaminants - List is subject to change without notice.**

**WARNING!** With the above contaminants present, failure to remove these contaminants or to pipe combustion air directly to the heating appliance can eventually lead to the deterioration of the venting material by way of the contaminated condensate, resulting in severe personal injury, death or substantial property damage**.**

## SPECIAL STAINLESS STEEL VENTING

### For use with Category I, II, III, & IV gas burning appliances

# Observations to Note

Contact Local Building or Fire Officials about Restrictions and Installation Inspections in your area as well as National codes: USA - National Fuel Gas Code ANSI-Z223.1/NFPA 54, CANADA – CAN/CSA-B149.1 Natural Gas and Propane Installation Code. Please refer to appliance manufacturers' instructions to determine proper sizing and connection of venting system to appliance, including maximum horizontal length, maximum height, and installation clearances (air spaces). The proper operation of the vent system and appliance requires parts specified by Z-FLEX® with no deletions or substitutions**.**

In order to validate a warranty installation **Z-FLEX®** recommends that a professional with Special Gas Venting experience or a certified Gas Ticket professional MUST perform the installation.

**These instructions are intended as a guide to assist a professional installer.**

When the vent system is installed, the following should be observed:

1 A venting system that exits the structure through a sidewall or the like, shall terminate not less than 12 inches (254 mm) above the ground or normal snowline. (See Minimum Clearance to Vent Termination Illustration 1).

2 The termination of a system shall be located above the snow line in geographical areas where snow accumulates. The termination area should be kept clear of snow and ice at all times.

3 The vent shall not terminate less than 7 ft. (2.13 m) above a paved sidewalk or driveway.

4 The termination shall be 6 ft. (1.8 m) or more from the combustion air intake of any appliance.

5 The system shall terminate more than 3 ft. (0.91m) from any other building opening, gas utility meter, service regulator or like.

6 TO LIMIT CONDENSATION, FREEZING & PROTECT AGAINST MECHANICAL FAILURE:
Enclose any exterior single wall vent systems below the roof line.
Install any condensate drain(s) in the interior of the heated building to avoid condensate freezing.

# Minimum Clearance to Vent Termination

## Sidewall Clearances - Category III & IV Appliances

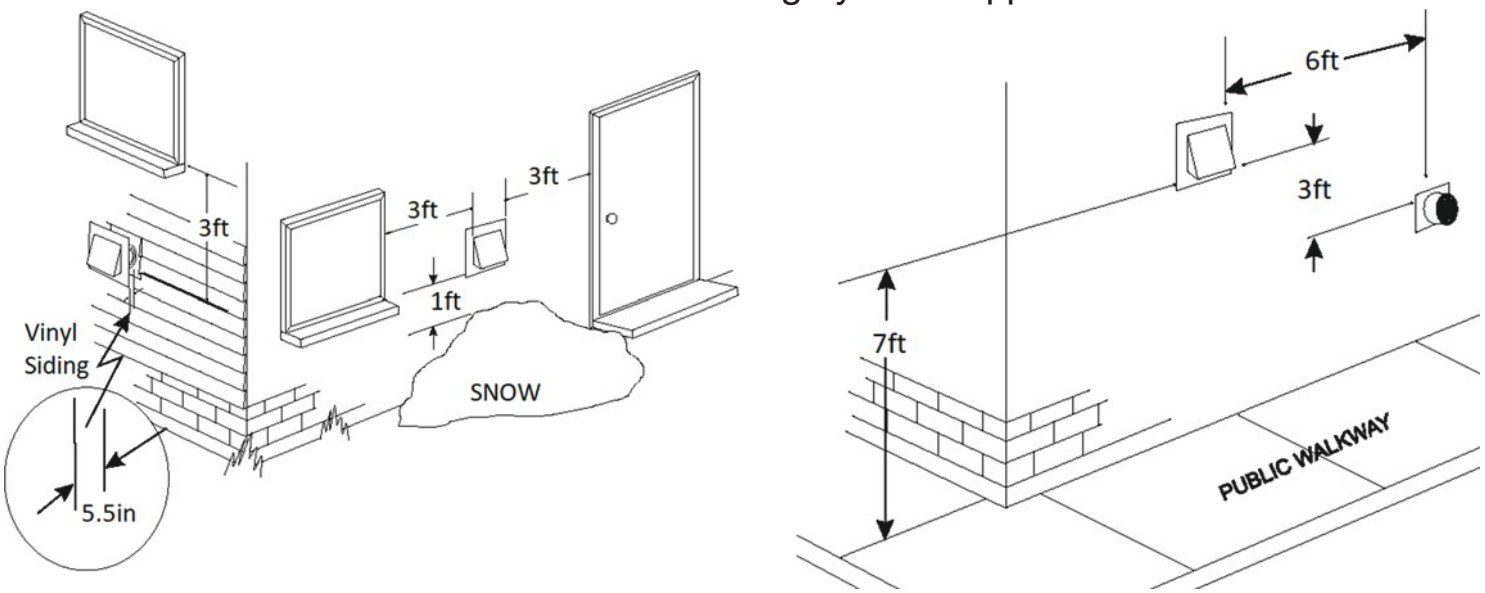


**Illustration 1**

## Vertical

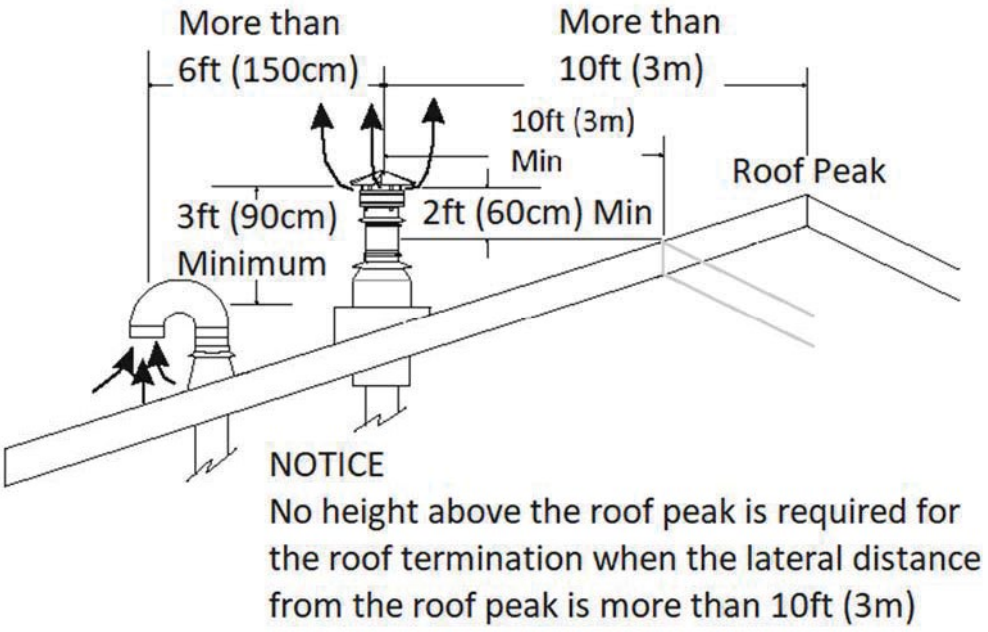


**Illustration 2**

**NOTICE**

The vent terminations of some Listed appliances may be installed at lesser clearances when specified in the appliance installation instructions and in compliance with NFPA 54 or CSA B149.

**NOTICE**

**A.** The Z-FLEX® SPECIAL STAINLESS VENT SYSTEM is for use only with appliances having a positive vent pressure of 8" of water column or less.

**B.** Except for installation in one and two family dwellings, a venting system that extends through any zone above that on which the connected appliance is located shall be provided with an enclosure having a fire resistance rating equal to or greater than that of the floor or roof assemblies through which it passes

**C.** Do not wrap the pipe with insulation or cladding or place any type of insulation within the required air spaces surrounding the venting system.

**D.** A termination must be used on all installations to assure proper operation and to prevent debris from entering the venting system.

Category I appliances must use a Rain Cap with WIND BAND; part numbers 2NVSRCX_,_ to prevent debris and rain from entering the venting system.

**E.** Vertical runs must be supported; at base of vertical run, at single wall adjustable pipe joint outlet, at every ceiling/floor and at roof if appropriate.

**For vertical runs a support is required every 16 ft. (4.88m) or less of vertical height.**

Horizontal runs must be supported; within 1 ft. of appliance adaptor, at floor if appropriate and each elbow.

**For horizontal runs a support is required every 48" or less of horizontal length.**

**F.** It is recommended that ***vertical*** and ***horizontal drain tees*** with at least 3 inch p-traps be installed on long vent systems in order to eliminate the system of condensate as quickly as possible.

**G.** It is recommended to align and orient weld seams upwards towards ceiling in any horizontal vent runs.

# Joint Procedure

The female end of each vent component incorporates a self-sealing gasket. Examine all components for damage to ensure that gasket integrity has remained intact during shipping.

**WARNING!** **Joint connections not meeting the full insertion can leak causing severe personal injury, death or substantial property damage.**

**1.** Apply lubricant p/n 2LUBE to gasket, insert male end into female section while keeping pipes parallel use a twisting motion and push together until indent on male end of pipe aligns up with end of female section or at least inserts:

i) 1.75 inches for diameters up to 5 inch.

**PIPE JOINT NOT MEETING THE MINIMUM ABOVE PARAMETER IS *NOT* FULLY SEATED AND IS THEREFORE AN UNACCEPTABLE CONNECTION.**

**2.** Tighten gear clamp to a **minimum** torque of 40 in/lbs. and a **maximum** of 50 in/lbs.

**WARNING!** **Over tightening the gear clamp can cause the seal to fail. DO NOT use power tools when tightening gear clamps.**

**DANGER!** **Fasteners (screws, rivets, etc.) must not penetrate the components of the single wall system either when joining pipes and fittings or using support straps. Drilling holes in the components is not permitted.**

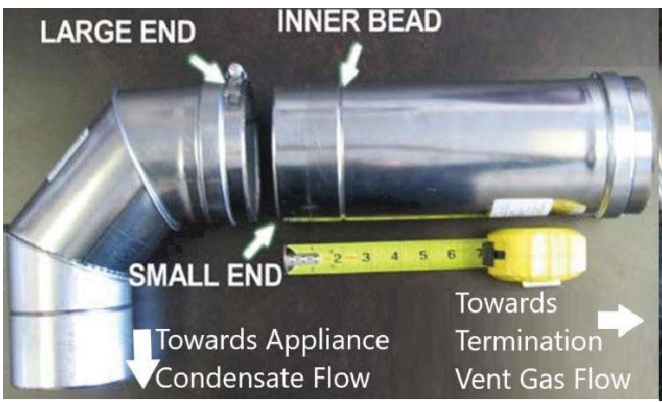


Image 1

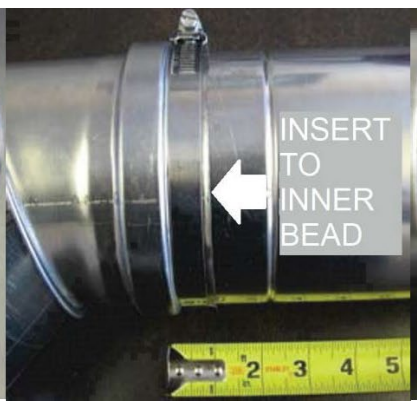


Image 2




Image 3

**NOTICE**

Proper pipe orientation is essential to achieve effective condensate flow. In most cases the use of an appliance specific **flue collar adaptor** is required to connect directly to the appliance. This adaptor will configure the vent orientation with the gasket end of pipe and fittings towards termination.

**Also:**
Some flue collars may require the use of high temperature silicone sealant to make a positive pressure gas tight seal.

| MINIMUM AIR SPACE CLEARANCE TO COMBUSTIBLE MATERIALS AND BUILDING INSULATION | | | | | |
|---|---|---|---|---|---|
| VENT DIAMETER | MAXIMUM RATED VENT GAS TEMPERATURE | ENCLOSED | | UNENCLOSED | |
| | | HORIZONTAL | VERTICAL | HORIZONTAL | VERTICAL |
| UP TO 5" | 550°F (288°C) | NON-COMBUSTIBLE MATERIAL | 6" (150mm) | 3" (75mm) | |
| | 480°F (249°C) | 8" (200mm) | 4" (100mm) | 1" (25mm) | |

**Non-Combustible Material is defined as material that is not capable of being ignited or burned, such material consisting entirely of, or a combination of, steel, iron, brick, tile, concrete, slate, glass, plaster (Source: NFPA-54 / ANSI 2223.1-1999)**

**Table 2: Clearance to Combustible Materials**

## Horizontal /Sidewall Venting Installation - Category III & IV Appliances

(See Illustrations 1 & 3 and Images 10 & 11)

1. Prior to beginning the installation, loosely assemble all parts required to make sure ***all*** parts are present.
2. Review the venting requirements section in the appliance manufacturer's installation & operating manual to determine the vent system configuration.
3. Select and apply the appliance adaptor to the flue outlet collar of the appliance.
4. Observing the sidewall vent termination rules on pages 3 & 4 and/or local building codes. Select the point of wall penetration where the minimum 1/4 inch per foot of slope (6.4 mm per 305 mm) can be maintained.
   i. On a non-combustible wall, the pipe may be mortared in directly without using a wall thimble.
   ii. A *wall thimble* is required if terminating through a combustible wall.
   iii. A framed opening is required to insert the wall thimble halves see Table 3 for part I.D. and associated opening. The thimble is adjustable for different wall thicknesses consult Table 3 for appropriate part ID.

| Wall Thimble Part ID | | Single Wall Outer Diameter | Outer Single Wall to Thimble Clearance | Thimble to Combustible Clearance | Combustible Wall Inside Opening MINIMUM | Thimble Outer Plate Dimensions | Maximum Vent Gas Temperature |
|---|---|---|---|---|---|---|---|
| 4"-7" Wall | 5"-10" Wall | | | | | | |
| 2NVWT3 | 2NVWT3L | 3" | 1" | 0” | 5" x 5" | 10" x 10" | 480°F |
| 2SVWT4 | 2NVWT4L | 4" | 1" | 0” | 6" x 6" | 10” x 10” | 480°F |
| 2SVWT5 | 2NVWT5L | 5" | 1" | 0” | 7" x 7" | 12" x 12" | 480°F |

**Table 3: Single Wall Thimble**

**WARNING!**

**Review appliance manufacturer's instructions and verify above clearances in Table 3 for Wall Thimble is appropriate as it may be necessary to increase Combustible Wall Inside Opening MINIMUM for additional clearance.**

iv. Install wall thimble halves into wall; note inside wall plate may have tabs for gear clamp and may have ventilation holes / openings. Caulk around outside edge of plates as necessary and fasten to wall using field supplied caulk and hardware. DO NOT caulk ventilation openings on inside wall plate.

v. The termination shall be installed no less than 5-1/2 in. from a combustible exterior sidewall (See pages 3 & 4 for Sidewall Clearances).

vi. The vent pipe must be sealed with field supplied sealant at wall thimble as per code regarding continuous vapor barrier.

5. Continue connecting the required lengths of pipe and fittings starting from the appliance adaptor throughout the system making certain to follow the instructions in this guide with respect to i) Joint Procedure, ii) Slope iii) Supports iv) Clearances, v) Drain Traps and vi) Side Wall Termination.
6. Installing the sidewall termination is achieved from installing pipe from outside through the wall thimble to the inside. Perform all joint connections per Images 1-3 using **JOINT PROCEDURE** as described on page 5.
   i. Connect the termination to the required length of pipe.
   ii. Insert the small end of the pipe through the wall thimble from outside. (Note: The "UP" arrow on the label of the termination for proper orientation)
   iii. Install a gear clamp through tabs and around the pipe on the inside of wall to within ¼ inch of wall plate to trap the pipe in position so that the system cannot be moved in or out of wall (See Images 10 & 11). This applies to both combustible and non- combustible walls.

Wall Thimble – Pipe & Termination Shown

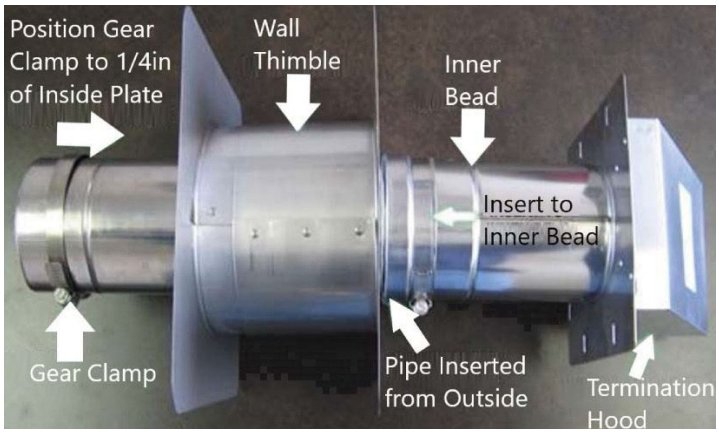


**Image 10**

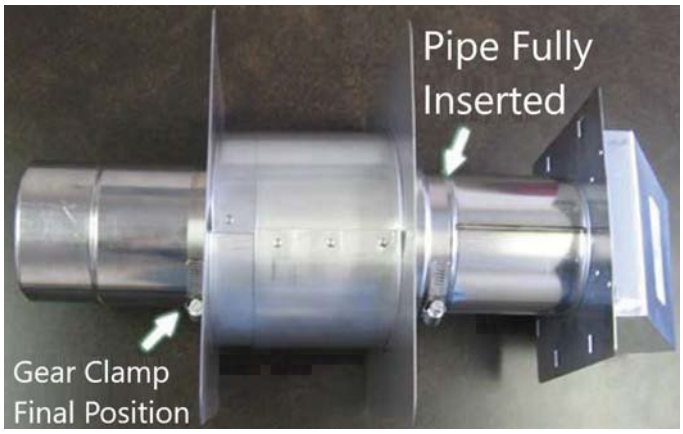


**Image 11**

7. Horizontal runs must be supported; within 1 ft. of appliance adaptor with Wall Support 2NVSS__ or 2SVSWS__, at floor if appropriate with Floor Base Support 2SVSFBS__, and at every elbow with Wall Support 2NVSS__ or 2SVSWS__ or loose stainless steel strapping, see Illustration 3. Maintain clearance to combustibles as per Table 2 on page 6.
   **For horizontal runs a support is required every 48" or less of horizontal length.**

8. The horizontal distance of the system from the appliance flue collar to the outside of the horizontal termination shall not be greater than that specified in the appliance manufacturer's installation instructions.

## Vent Pipe Slope

**NOTICE**

**All horizontally installed portions of a vent system shall have a slope (upwards) not less than ¼ in. (6.4 mm) every 12 in. (305 mm) to prevent collection of condensate at any location in the vent system. This condensate shall be directed to a condensate drain installed within the system.**

**WARNING!** **Cut pipe joint connections not meeting the full insertion criteria can cause personal injury, death or substantial property damage.**

# How to Cut Pipe

The pipe may be cut to length on the non-expanded end using aviation snips or a hacksaw with a 24 tpi blade. Make certain to keep the cut end square & cylindrical. The cut end must be filed or sanded smooth before joining (See Images 14 & 15).

**NOTICE**

**Make certain to account for the correct insertion depth when measuring for a cut length of pipe. 2 INCH INSERTION DEPTH**

i. Measure 2 inches from cut end and draw a line to indicate depth insertion.
ii. Insert male end into female end to within ¼ inch of the drawn line to achieve full depth insertion.

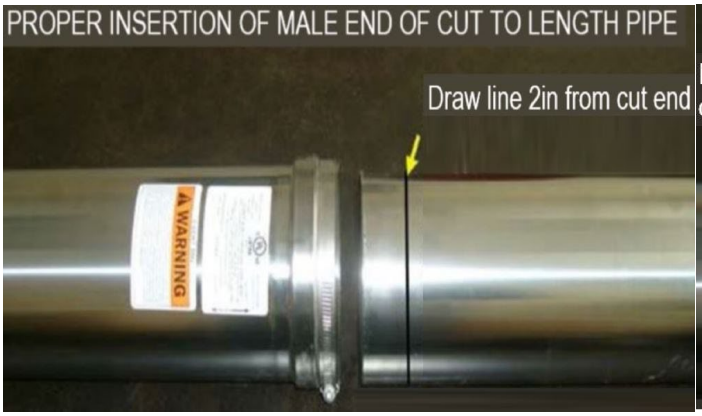


**Image 14**

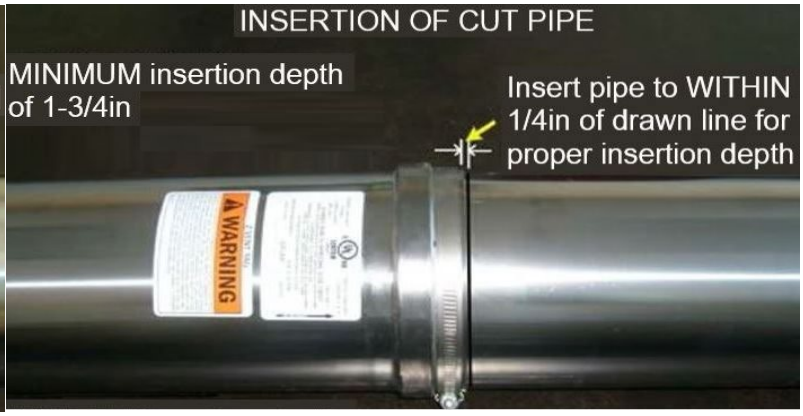


**Image 15**

# Adjustable

- It is recommenced to use an adjustable pipe for a non-standard vent length to avoid cutting a vent pipe.
- The 3- 4 inch adjustable pipes are a 2 pipe design and can be installed in any adjacent single wall pipe or fitting.
- The 5 inch adjustable pipes are a 1 pipe design and should only be installed into an adjacent single wall pipe (not in any fittings) with a minimum length of 18 inches for the full range of adjustment see Table 5.
- For 5 inch, the adjustable slides into the adjacent pipe (See Images 16 & 17) and *should be used on vertical and horizontal runs where possible in order to allow ease of connecting the vent assembly during the final stages*.
- Support adjustable pipe at each joint outlet especially on vertical runs, ensure adjustable pipe is not subject to any vertical force loads.

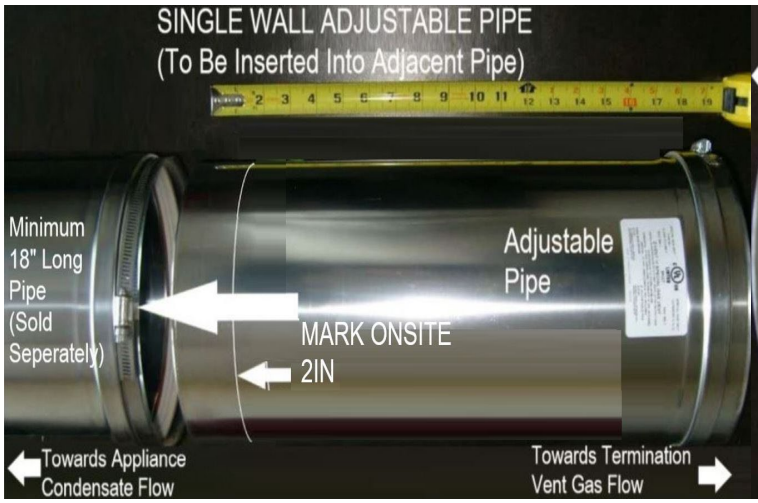


**Image 16**

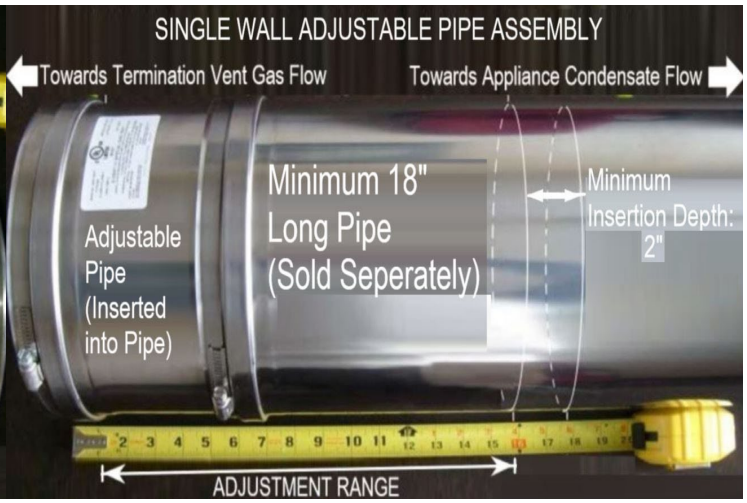


**Image 17**

**NOTICE** Installer shall mark the minimum insertion depth on a 5 inch adjustable pipe and insert to at least this marking.

**WARNING!** **Neglecting to insert the adjustable pipe to the prescribed insertion depth can result in joint failure.**

| Single Wall Adjustable Part ID | Vent Diameter "A" | Overall Length | Min. Effective Length | Max. Effective Length | Adjustment Range "B" | End Lengths "C" | |
|---|---|---|---|---|---|---|---|
| 2NVALL3 | 3 | 23.90 | 13 | 21.90 | 8.90 | 2 | 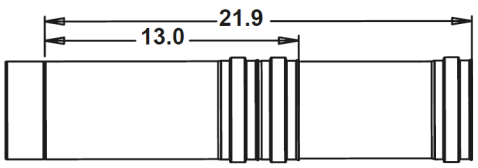  |
| 2NVALL4 | 4 | 23.90 | 13 | 21.90 | 8.90 | 2 | |
| 2NVPA5 | 5 | 17.75 | 2* | 15.75 | 13.75 | 2 | 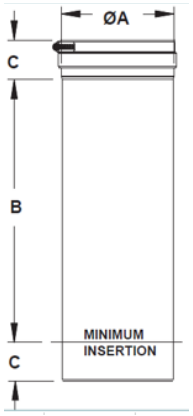  |
| * Single Wall NovaVent® Pipe with a Minimum of 18" Length Required For Full Adjustment Range | | | | | | | |

**Table 5: Adjustable Pipe Dimensions (inches)**

# Condensate Tube Installation

- The Z-Flex Silicone Tube Kit contains: 3/8 inch ID tube (various lengths), 1 hose (wire) clamp ½ inch, 2 cable ties.
- When installing the condensate tube be sure to make a trap by forming at least a 3 inch (75 mm) diameter loop and secure with cable tie.
- Fill the p-trap loop with water • Place hose clamp over the end of the tube • Attach the tube to the spigot of the drain cap
  • Using standard pliers pinch the hose clamp and slide towards the tube / spigot connection and release. (See Images 22 & 23)

**Note:**

This tube must be 3/8 inch ID high temperature silicone for at least the first 6 inches (152 mm) for category III systems. Alternate tubing having a minimum temperature rating of 300°F ≈ 150°C may be used on category II & IV systems.

- Check the local codes / regulations to determine how the effluent (condensate fluid) is to be drained.

**NOTICE** Local regulations may require the use of a neutralizer kit when using a condensate trap. A condensate pump may also be required. Contact your heating appliance manufacturer or local distributor for a neutralizer kit if required.

**IMPORTANT:**

- **Installer must demonstrate to the resident** how to periodically check the p-trap loop(s) during the operating months to make certain that that it is free flowing and filled with water. This will ensure the flow of condensate and:
  a) Prevent the exhaust gases venting through the drain fitting in a positive pressure vent system (Category III / IV).
  b) Prevent the suction of mechanical room air through the drain fitting in a negative pressure system (Category II).

**NOTICE** Z-Flex® recommends that a condensate drain of suitable configuration be installed in the venting system so that any condensate produced in the vent system is allowed to drain from the vent system before collecting in the appliance.

# Drain Assembly with p-Trap (Single Wall Pipe shown)

**NOTE: IT MAY BE REQUIRED TO HAVE MORE THAN ONE CONDENSATE DRAIN ON A LONG VENT RUN IN ORDER TO DRAIN THE CONDENSATE FROM THE SYSTEM AS QUICKLY AS POSSIBLE.**

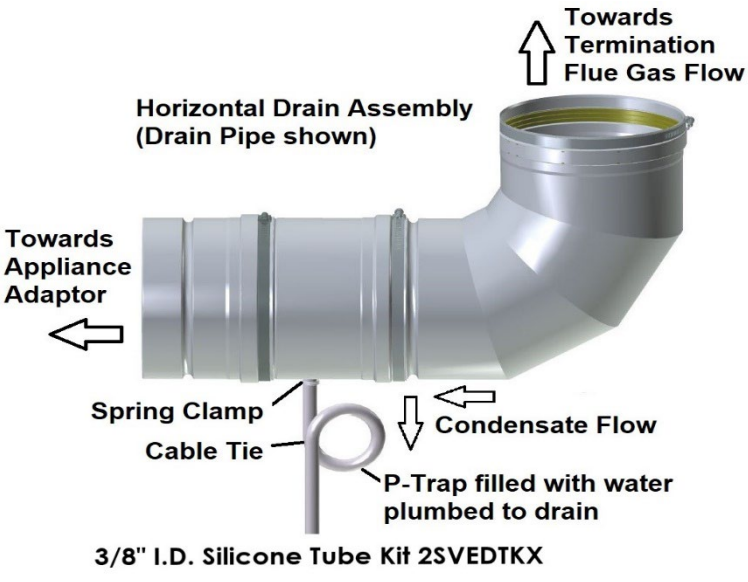


**Image**

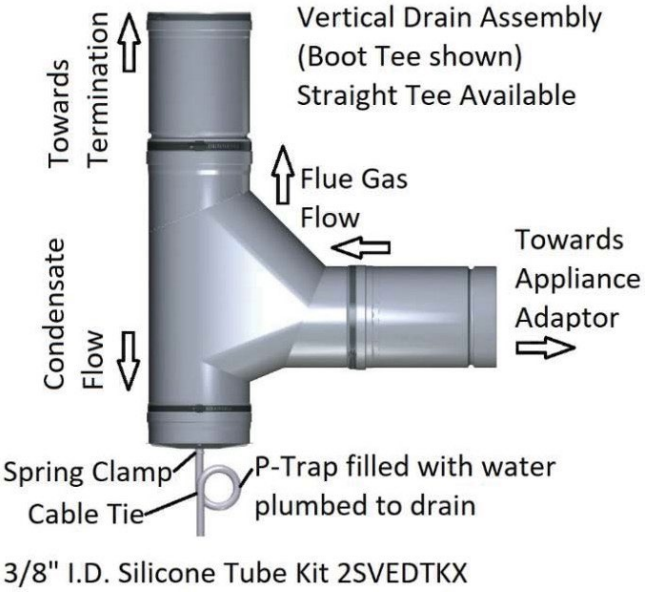


**Image**

# Support Systems

See other sections for additional support information

Vertical runs shall be supported;

- at base of vertical runs with the following appropriate support: 2SVSFBS_ _ - Floor Support where transition tee is in an open space or 2SVSBS_ _ - Base (Wall) support where the transition tee is running up along a wall or 2NVSS_ _ or 2SVSWS_ _ - Vent Support in close proximity to the transition tee
- along the riser height to alleviate weight bearing load on the appliance vertical outlet with the following appropriate support: 2SVSVRS_ _ V – Vertical Riser Support or 2SVSCB_ _ Clamp Band Support (threaded rod or wire cabling by others)
- at single wall adjustable pipe joint outlet such that the weight of the vent system does not affect the adjustment range within the adjacent pipe: 2SVSVRS_ _ V – Vertical Riser Support or 2SVSCB_ _ Clamp Band Support (threaded rod or wire cabling by others)
- at every ceiling / floor with 2ZVFSS__ - Firestop Support or 2SVSCB_ _ - Clamp Band Support for noncombustible applications
- at roof *if necessary* with Flashing and Storm Collar (Top Support) 2SVSLS_ _ and Guy Band 2SVSGB_ _ if vent is 6 ft. above roof.

**For vertical runs a support is required every 16 ft. (4.88m) or less of vertical height.**

Horizontal runs must be supported;

- within 1ft. of appliance adaptor with Wall Support 2NVSS_ _ or 2SVSWS_ _
- at floor if appropriate with Floor Base Support 2SVSFBS_ _



**Base (Wall) Support 2SVSBS_ _**

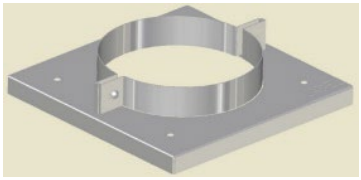

**Vertical Rise Support 2SVSVRS_ _V**

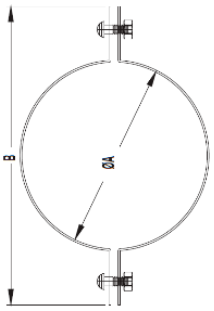

**Clamp Band 2SVSCB_ _**



**Wall Support 2NVSS_ _ or 2SVSWS_ _**



**Storm Collar (Top Support) 2SVSLS_ _**

**NOTICE** Loose metal strapping can be used for horizontal supports, see Illustration 3. It's recommended to use strapping made of similar material to the vent pipe (stainless steel) to minimize galvanic corrosion of the support system. Maintain clearance to combustibles as per Table 2 on page 6.

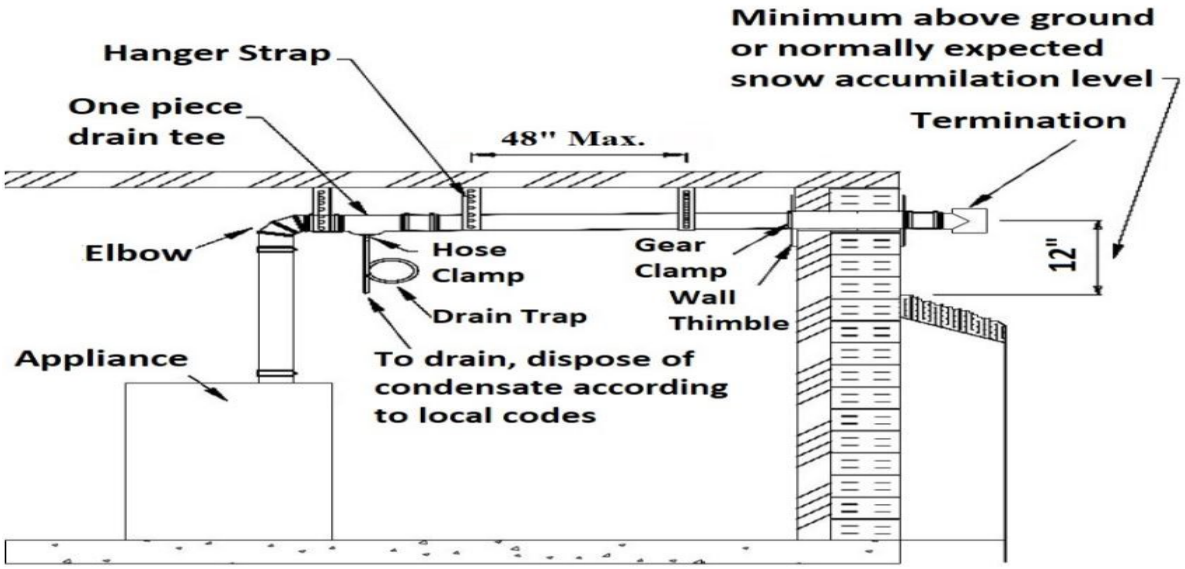


**Illustration 3**

## INSTALLATION OF HORIZONTAL SUPPORTS

**IMPORTANT:** The vent system **MUST** be **supported DURING THE POINT OF INSTALL.**

**Example:**

1 From your selected termination point at the wall you can prepare your support locations by temporarily placing one end of a straight length of wood such as a 2" x 2" or 2" x 4" or broom handle in the prepared termination location.

2 Lower the other end of this length of wood to make certain that you have sloped / pitched your horizontal run properly. (minimum ¼ inch per foot slope)

3) Affix your hanger supports at the proper intervals. I.E. At each "directional change" and every 48 inches

4) Install pipe and or fittings through the supports during assembly.

# Vertical Venting Installation

- Single wall vent terminations above the roof line must be at least 3 ft. (.9m) high to a maximum of 6 ft. (1.8 m) without the use of lateral supports and 2 ft. (.61 m) higher than any part of a structure within 10 ft. (3.1 m).
- Each pipe joint above the roof shall be connected using the coupling / guy band assembly.
- Vertical heights greater than 6 ft. above the roof shall have guy wires connected to the coupling / guy band assembly at 6 ft. intervals. Fasten Guy wires of stainless steel or galvanized cable with a minimum capacity of 500 lbs. to each of the four anchor holes that is integral to the coupling / guy band assembly and anchor to the roof structure using the appropriate fastening method.
- The total vertical distance of the vent system from appliance flue collar to the rain cap termination and the maximum length of offsets shall not exceed that specified in the appliance manufacturer's installation instructions.
- All horizontal sections must observe the rules for **HORIZONTAL VENTING.**

1 Prior to beginning the installation, loosely assemble all parts required to make sure ***all*** parts are present.

2 Review the venting requirements section in the appliance manufacturer's installation & operating manual to determine the vent system configuration.

3 Select and apply the appliance adaptor to the flue outlet collar of the appliance.

4 Locate and mark the breach location(s) of the vertical stack for Firestop Spacer(s) and/or Firestop Spacer Support(s) and Roof Flashing.

5 Install the required Firestop Spacer(s) and/or Firestop Spacer Support(s) and Roof Flashing per these instructions.

6 Continue connecting the required lengths of pipe and fittings starting from the appliance adaptor throughout the system making certain to follow the instructions in this guide with respect to i) Clearances ii) Joint Procedure, ii) Slope iii) Drain Traps iv) Supports and vi) Vertical Termination.

7. Where a vent pipe is to install through a Firestop Spacer Support. Insert vent pipe with male end through clamp and plate(s) of Firestop Spacer Support and into female end of mating pipe with gasket. Tighten gear clamp or clamp hardware ensuring proper positioning of vent pipe including any horizontal slope, see Installing Firestop Spacer / Support Plate(s) for additional details.

8. Where the vertical system is to install through the roof, install appropriately pitched Roof Flashing. Remove shingles where vent is to penetrate roof and cut opening in combustible roof plywood (2" larger than vent diameter for flue gas temperatures up to 480°F and 6" larger than vent diameter for flue gas temperatures from 480°F to 550°F). Center flashing over opening, locate shingles on upper flashing mounting plate, cut shingles as necessary. Secure shingle / flashing to roof with roofing nails (field supplied). Seal flashing and nail heads with appropriate sealant (field supplied).
9. Repeat step 6.
10. Where the vent passes through the Roof Flashing extend the pipe above the roof following the Vertical Termination Clearances. (See Illustration 2)
11. Install the Storm Collar (Top Support) on the pipe just above the Roof Flashing and seal around the top edge where the collar meets the pipe.
12. Affix the vertical termination following the Joint Procedure (page 5).

## Installing Firestop Spacer / Support Plate(s)

**NOTICE** A Firestop Spacer or Firestop Spacer Support must be provided when a vent passes through a combustible floor or ceiling. The opening must be framed to receive the integrated spacer brackets of the Firestop Spacer / Support.

- The Firestop Spacer / Support plate is shipped as a flat square plate or plate halves with all brackets flat.

  i. Bend 4 Spacer brackets downwards; when design includes 2 sets of 4 spacer brackets refer to Heating System Operating Specifications to determine the system maximum vent gas temperature and select the appropriate set of 4 spacer brackets marked with temperature (480°F outer brackets or 300°F inner brackets) . (See Image 24)

  ii. When design includes support clamp brackets on the plate. The support clamp is to be loosely bolted to (or through) support clamp brackets. Select the appropriate support clamp brackets and bend upwards (and around clamp for center hole brackets). (See Images 24 & 25)

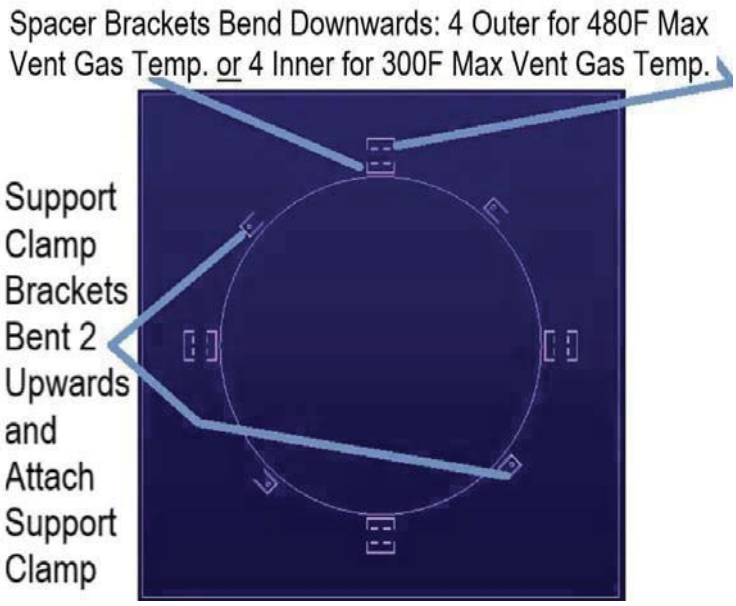


**Image 24**

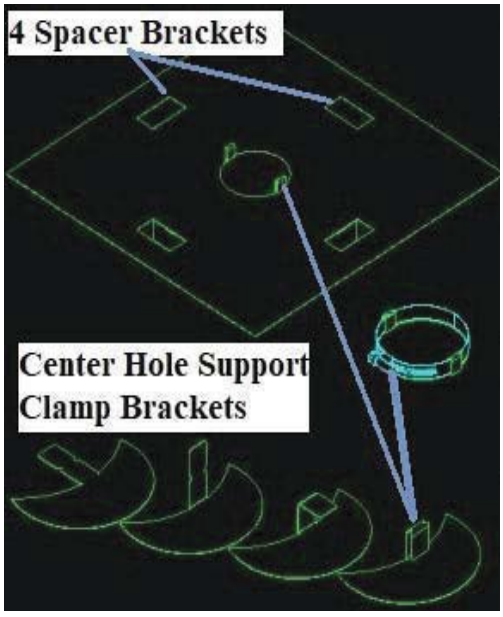


**Image 25**

- Measure the dimensions of the selected spacer brackets to determine the hole size that must be cut into the floor or consult Table 7 if part I.D. matches.
- Transfer this dimension to the predetermined breaching floor locations and cut hole.
- Cut a square hole and clear any flooring material so that a proper frame can be installed.

  i. When cutting the opening, allowance must be made for the thickness of the frame and frame the opening of the floor using lumber, which is dimensionally consistent with the structural members.

**NOTICE** In the event that floor joists must be cut follow the building codes having jurisdiction for reframing the opening.

- A support clamp is supplied with a Firestop Spacer Support. The support clamp is to be installed around vertical pipe (and to or through support clamp brackets when include) just above the top of the Firestop Spacer Support plate(s).
- Install vertical vent pipe through center hole of Firestop Spacer plate(s) with 4 spacer brackets facing downward. When design has 2 plate halves, interlock 2 spacer brackets between Firestop Spacer plates.
- Secure Firestop Spacer plates(s) to top of framed opening using the appropriate drill and screws.
- Complete pipe connections.
- Check the height and or level of the vent for correctness and tighten the Firestop Spacer Support clamp as it rests on the plate(s).
- Seal any openings in Firestop Spacer / Support including around outer vent pipe and firestop/ceiling/joists with field supplied firestop sealant. Discuss sealant and assembly with firestop professional and local building and fire officials to ensure fire stop meets with local code requirements. (See Image 26)

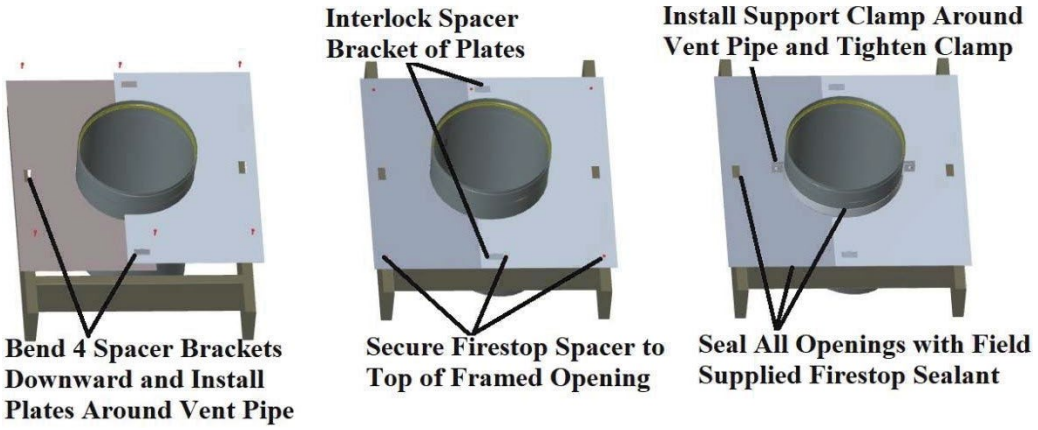


**Image 26**

| Firestop Part ID | Firestop Support Part ID | Single Wall (Outer) Diameter (Nominal) | Single Wall Outer to Combustible Clearance | Combustible Ceiling Inside Opening MINIMUM | Fire Stop Outer Plate Dimensions | Maximum Vent Gas Temperature |
|---|---|---|---|---|---|---|
| 2ZVFS03 | 2ZVFSS03 | 3" | 4" | 11" x 11" | 16" x 16" | 480°F |
| 2ZVFS04 | 2ZVFSS04 | 4" | 4" | 12" x 12" | 17" x 17" | 480°F |
| 2ZVFS05 | 2ZVFSS05 | 5" | 4" | 13" x 13" | 18" x 18" | 480°F |

**Table 7: Firestop Spacers & Firestop Spacer Supports**

# Installing Vent into an Existing Masonry Chimney

**NOTICE** A masonry chimney flue may be used to route vent through provided that no other appliance is vented directly into the same flue without a chimney liner.

- Prior to beginning the installation make certain that the existing chimney meets all national and local building codes.
- The chimney must be cleaned, removing all soot, debris and creosote before installing vent.
- It is recommended to have the vent stack supported from the bottom so that the system is in compression.
- Prepare and install the "preferred" support for receiving the vent system at the bottom of the stack.
- Following the joint procedure (page 5) connect the bottom fitting / pipe together. It is recommended that a guy band coupler assembly be installed (See Illustration 10) every 2nd joint. Implementing "best practice" and / or "preferred" methods assemble the vent system while lowering the flue downwards into the chimney onto the support.
- Prepare the chimney cap to receive the Flashing. Install the flashing over the last length of pipe down to the chimney cap.
- Loosely attach the Top Support to the pipe directly above the flashing leaving approximately 6 inches of pipe for the vertical termination connection and any breaching adjustment.
- Fasten the Flashing to chimney top using caulking and/or screws. If the top clay tile is still in place, the corners of the flashing should be notched and flashing plate formed down around clay tile.
- Install the vertical termination. Adjust the top support and tighten the collar. Apply sealant to upper edge where the top support collar meets the pipe

# Special Fittings

## TYPICAL ECCENTRIC INCREASER APPLICATION

- Eccentric Increaser (See Illustration 7) shall be used when increasing the appliance vent diameter or system diameter from one size to a larger size in a "**horizontal application**". (Refer to appliance installation & operating manual and /or engineered approved design)

- Eccentric Increaser provides a level wall allowing the condensate to flow unimpeded back to drain. (See Vent Pipe Slope page 7)

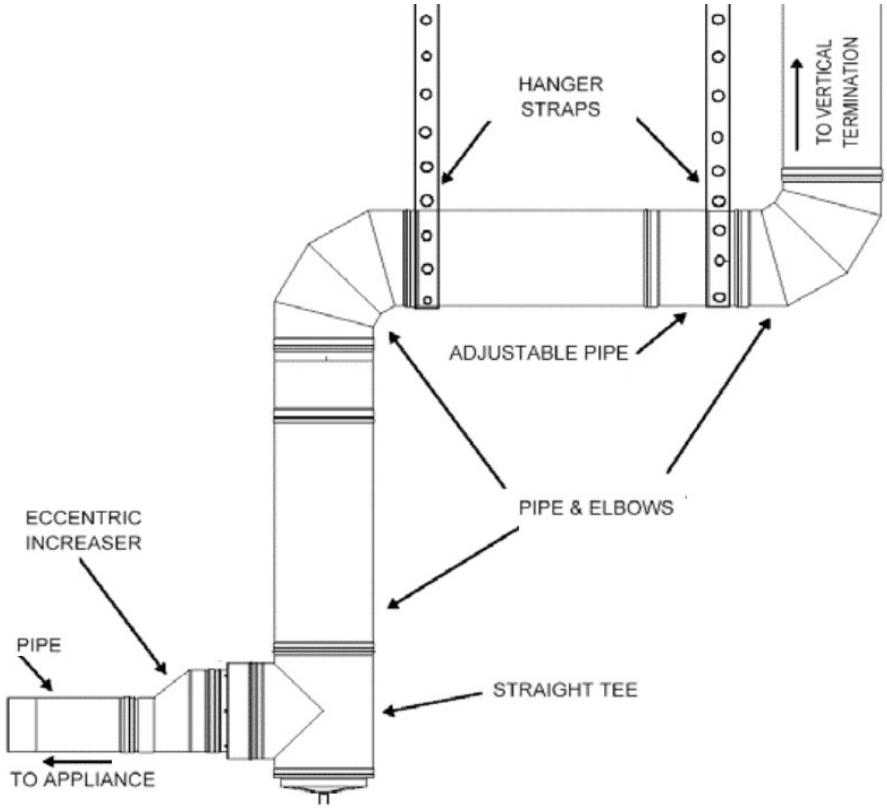


**Illustration 7**

## TYPICAL CONCENTRIC INCREASER APPLICATION

- Concentric Increasers (See Illustration 8) shall be used when increasing the vent diameter or system diameter from one size to a larger size in a **"vertical application"**. (Refer to appliance installation & operating manual and /or engineered approved design)

- Concentric Increaser provides a conical wall allowing the condensate to flow vertically unimpeded back to drain. (See Vent Pipe Slope page 7)`

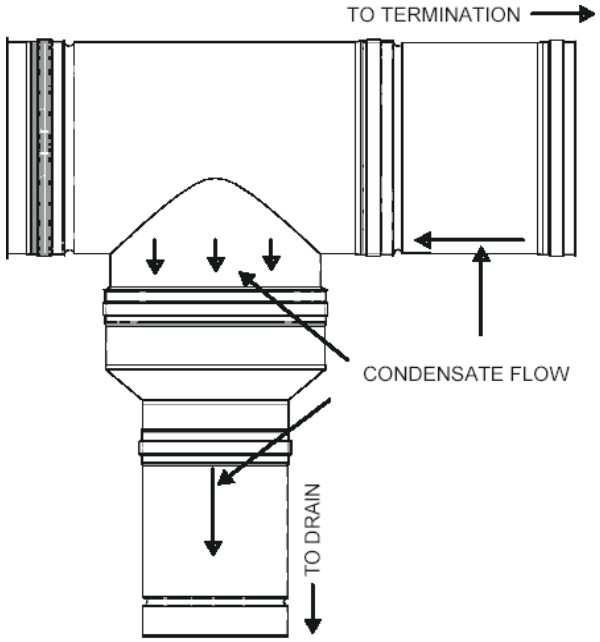


**Illustration 8**

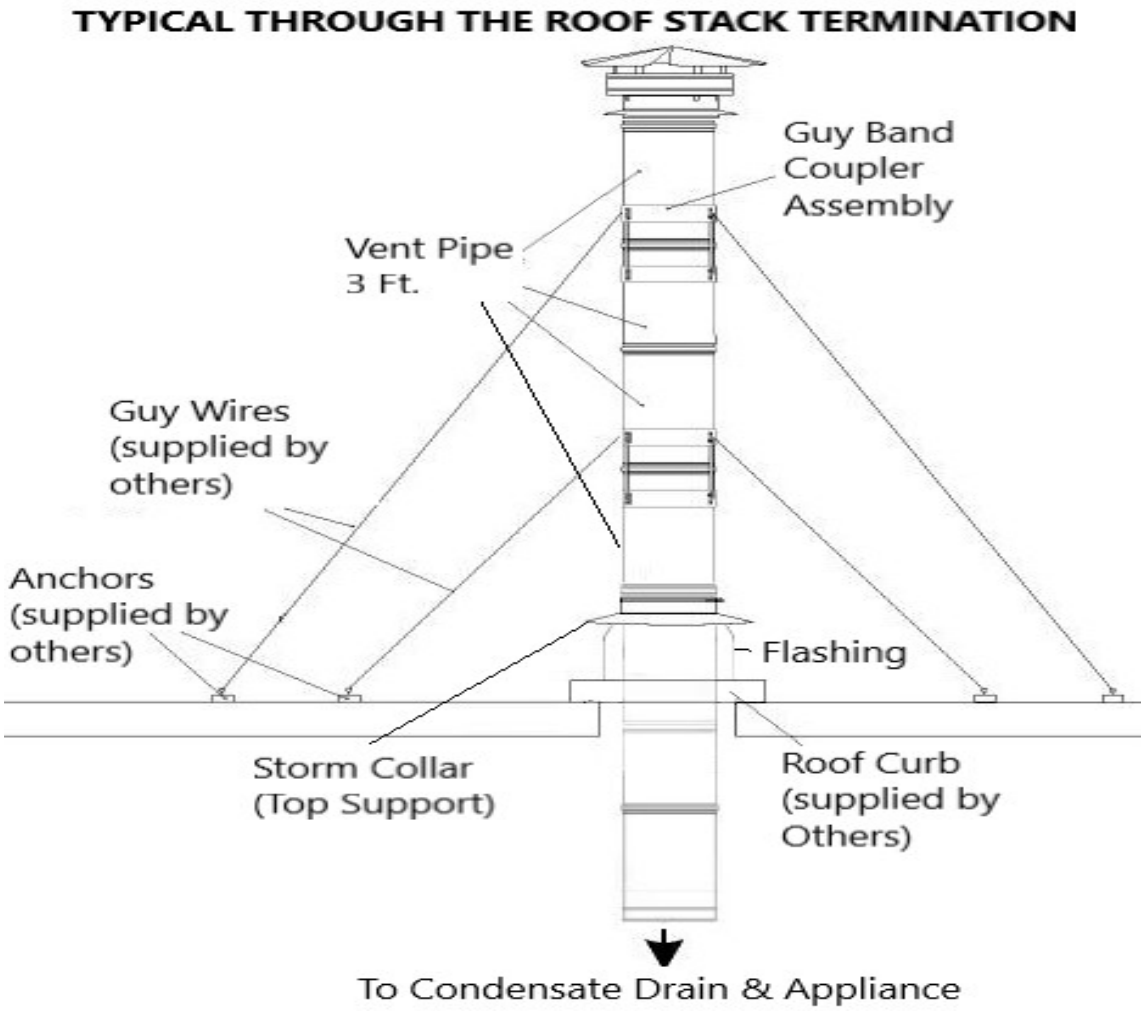


**Illustration 9**

## Guy Band Coupler Support Part ID - 2SV(S,D)GBS_ _ (See Illustration 10)

This guy band coupler can be used in the vertical & horizontal orientation providing additional rigidity & support when in final position (guy wires by others).

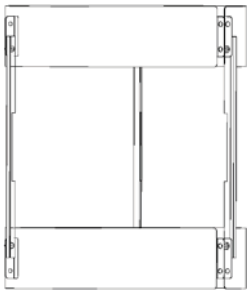



Tighten the lock-nuts onto the bolts that clamp the assembly onto the pipe to a torque specification of
70 in/lbs. / 6 ft-lbs. / 8 Nm.

**Illustration 10**

TYPICAL VENT THROUGH MASONRY CHIMNEY APPLICATION

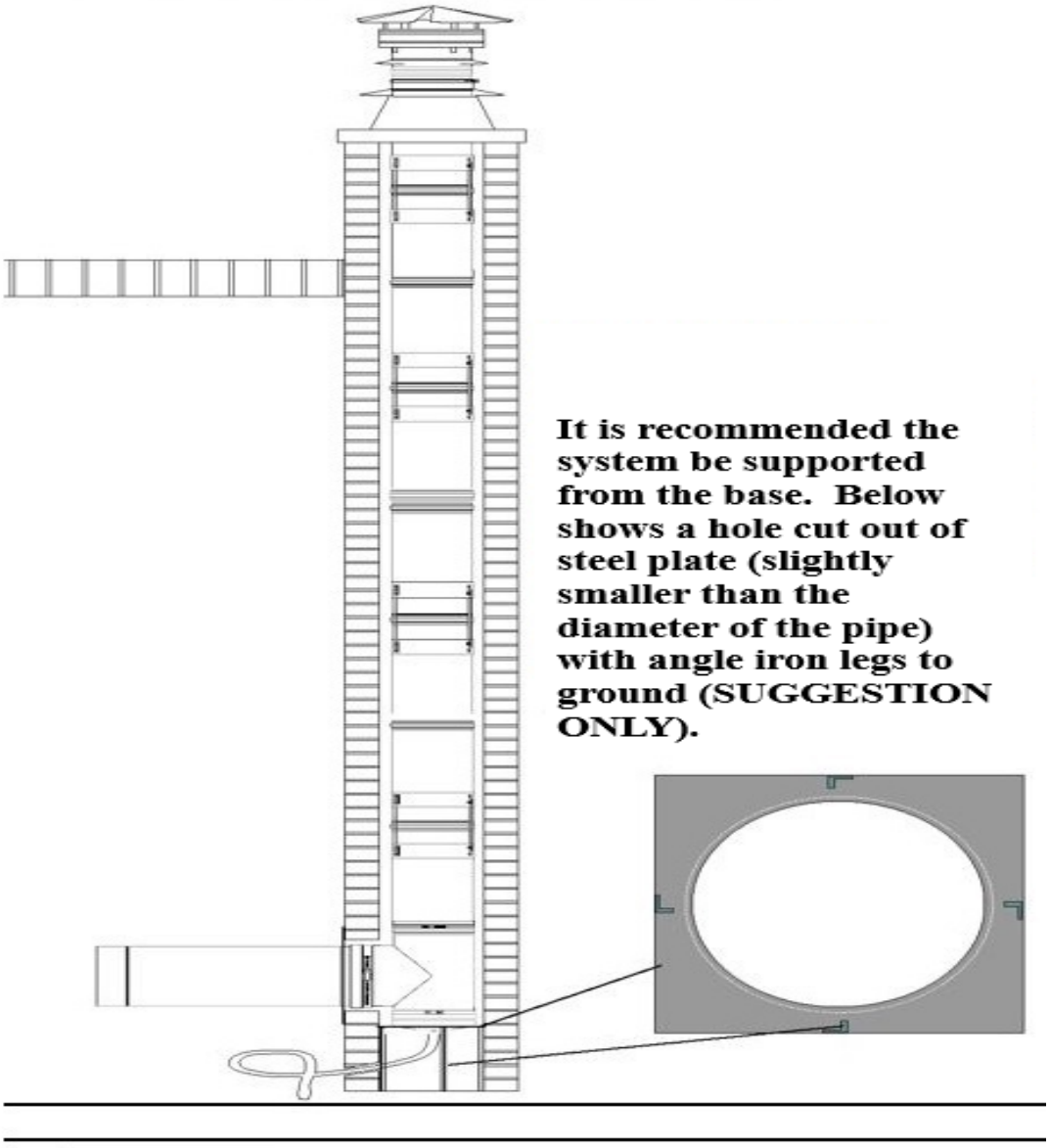


**Illustration 11**

## Floor / Base Support
## Part ID - 2SVSFBS_ _ (See Illustration 12)

Center the Floor / Base Support under the Vertical Tee making the necessary height adjustment to maintain the proper slope of the vent system.

**CAUTION!**

Installer is to allow sufficient space below the Floor / Base Support to properly install the Drain tube with prescribed P-Trap configuration. (See page 10)

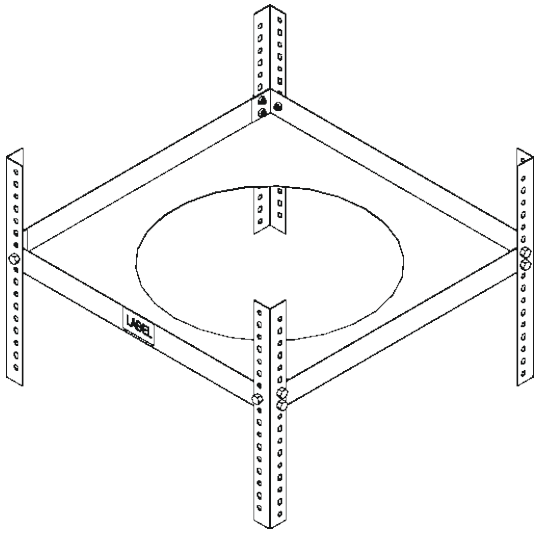

**Illustration 12**

## Appliance Connection

Refer to the appliance manufacturer's installation manual for proper method of joining NovaVent® to the appliance collar. An appliance adapter to suit specific requirements may be obtained from Z-FLEX®.

## Important Notice

When any of the previous installation procedures are completed, be sure to go over the entire system to make sure all joints are secure and sealed correctly. The seams and joints must be checked for tightness prior to using the venting system. A qualified inspector must check the entire system at least once annually following initial installation to maintain the **Z-FLEX®** warranty. The installation must conform to the requirements of the appliance manufacturers' instructions, The National Fuel Gas Code and local codes and regulations.

# Z-FLEX® LIMITED WARRANTY

Z-FLEX® ("Seller") extends the following LIMITED WARRANTY for NovaVent® (the " NovaVent® "):

Seller warrants that at the time of purchase, the NovaVent® will be free of manufacturer's defects in material and/or workmanship. This warranty shall extend to the original purchaser of the NovaVent® or, if purchased by a contractor, to the end user. This warranty is valid for a period of five (5) years from the date of purchase, provided that the NovaVent® has been installed according to Z-Flex® installation instructions. Deviating from the installation and use instructions included with the NovaVent® will void the warranty.

Under this Limited Warranty, Seller's sole responsibility and liability shall be to replace the NovaVent® and/or accessories, if found by Seller to be defective according to the terms of the warranty, and shall not include replacement installation or other costs.

**IMPORTANT:** The NovaVent® is designed for use with Category I, II, III and IV furnace and boiler venting and should not be used with any other type of furnace and boiler venting. Use of the NovaVent® with any other type of furnace and boiler venting other than those recommended by Seller for use with its NovaVent® will void the warranty.

**WARNING! CONDENSATION WITH HIGH ACID CONTENT MAY BE PRODUCED DUE TO UNFORESEEN CONDITIONS. YOUR HEATING APPLIANCE AND VENTING SYSTEM SHOULD BE INSPECTED BY A LICENSED CONTRACTOR ON AN ANNUAL BASIS FOR POSSIBLE SIGNS OF DETERIORATION DUE TO RUSTING OR PIN HOLES. CONDENSATION WITH HIGH ACID CONTENT MAY CAUSE LEAKAGE OF HARMFUL GASES WHICH CAN CAUSE NAUSEA, FAINTING OR DEATH. IF DETERIORATION IS DETECTED CEASE USE OF HEATING SYSTEM AND CALL FURNACE/BOILER INSTALLER FOR REMEDIAL ACTION.**

To activate the warranty, the end-user must complete and return the Z-Flex® Warranty Registration Card within ninety (90) days of installation of the NovaVent®. Upon written notice of any defects, Z-Flex® reserves the right to examine or establish reasonable proof of defective material or workmanship justifying replacement.

**NO OTHER EXPRESS WARRANTY HAS BEEN MADE OR WILL BE MADE ON BEHALF OF SELLER WITH RESPECT TO THE NOVAVENT® OR THE INSTALLATION OR REPLACEMENT OF THE NOVAVENT®. SELLER SHALL NOT BE LIABLE FOR ANY SPECIAL, INCIDENTAL, INDIRECT OR CON-SEQUENTIAL DAMAGES.**

As some jurisdictions do not allow the exclusion or limitation of incidental or consequential damages, the above limitations or exclusions may not apply to you.

**IMPLIED WARRANTIES, INCLUDING ANY WARRANTY OF MERCHANTABILITY OR FITNESS FOR A PARTICULAR PURPOSE, IMPOSED ON THIS SALE UNDER STATE LAW, ARE LIMITED TO THE PERIOD DURING WHICH THIS WARRANTY IS IN EFFECT. AS SOME JURISDICTIONS DO NOT ALLOW LIMITATIONS ON THE LENGTH OF AN IMPLIED WARRANTY, THE ABOVE LIMITATION MAY NOT APPLY TO YOU.**

Claims under this Warranty must be made within the warranty period in writing and directed to: In **the USA;** Warranty Claims, Z-Flex®(US) Inc., 20 Commerce Park North, Bedford, New Hampshire 03110, (603) 669-5136 or (800) 654-5600.
**In Canada;** Warranty Claims, Z-Flex® Inc., 452 Attwell Drive, Etobicoke, Ontario, M9W 5C3, (416) 679-0045.
This Warranty gives you specific legal rights, and you may also have other rights that vary in different States and Provinces.

---

**WARRANTY REGISTRATION CARD: Z-FLEX®**

For this warranty to be effective, this card must be completed upon purchase of the covered NovaVent® and returned to Z-Flex® within ninety (90) days of installation of the NovaVent®.

**Original end-user's name:** _____

**Address of premises in which the NovaVent® is installed:** _____

_____

**NovaVent® purchased from:** _____

**Date of Installation:** _____

**Type of Heating System into which NovaVent® installed:** _____

**I understand and agree to the Warranty as stated:** _____

_____ _____

**Signatur** **Date**