GH5SAN5
Single-Stage Heat Pump with Puron Advance™ Refrigerant 1.5 To 5 Tons

Product Data



Puron ADVANCE

This unit has been designed utilizing Bryant's non-ozone depleting and low global warming potential Puron Advance™ refrigerant.
Heat pumps with Puron Advance™ refrigerant provide a collection of features unmatched by any other family of equipment.

Industry leading Features / Benefits

Efficiency

- 14.3 - 16.0 SEER2 / 10.0 - 12.5 EER2 / 7.5 - 7.8 HSPF2 (depending on unit size and indoor combination installed)
- Microtube technology refrigeration system
- Indoor air quality accessories available

Comfort

- System supports programmable or standard thermostat controls

Sound

- Sound levels as low as 68 dBA

Reliability

- Non-ozone depleting and low global warming potential Puron Advance™ refrigerant
- Scroll compressor
- Internal pressure relief valve
- Internal thermal overload
- Loss of charge switch
- Filter drier
- Balanced refrigeration system for maximum reliability

Durability

Protection Package:

- Solid, durable sheet metal construction
- Dense wire coil guard

Applications

- Long line - up to 250 feet (76.20 m) total equivalent length, up to 200 feet (60.96 m) condenser above evaporator, or up to 80 ft. (24.38 m) evaporator above condenser (See Long Line Guide for more information.)
- Low ambient cooling (down to 0°F/-17.8°C) with approved low ambient accessory kits

Limited Warranty

- 5-year parts limited warranty (including compressor and coil)
  10-year parts limited warranty (including compressor and coil) with timely registration*
  – Equipment must be registered within 90 days of original installation, except in jurisdictions where warranty benefits cannot be conditioned on registration.
  * Applies to original purchaser/homeowner and not available to subsequent owners except in jurisdictions where applicable laws dictate otherwise.

See warranty certificate for complete details and restrictions.

MODEL NUMBER NOMENCLATURE

1	2	3	4	5	6	7	8, 9	10	11	12
G	**H**	**5**	**S**	**A**	**N**	**5**	**18**	**0**	**0**	**A**
Brand Type	**OD Type**	**SEER2**	**OD Design Type**	**Major Series**	**Voltage**	**Refrigerant**	**Nominal Capacity (X 1,000 BTUH)**	**Feature**	**Special Feature**	**Region**
G = Builder	**H** = HP	**5** = 14.3 SEER2	**S** = Single-Stage	**A** = Initial	**N** = 208-230-1	**5** = R-454B	**18/19** = 1.5 Tons **24** = 2 Tons **30/31** = 2.5 Tons **36** = 3 Tons **42** = 3.5Tons **48** = 4 Tons **60** = 5 Tons	**0** = Standard	**0** = Standard **1** = Compressor Electrical Rating Change **2** = Coil Optimization	A = Standard HP

Use of the AHRI Certified TM Mark indicates a manufacturer's participation in the program For verification of certification for individual products, go to www.ahridirectory.org.

Tested AHRI Combination Ratings

NOTE: Ratings contained in this document are subject to change at any time.

For AHRI ratings certificates, please refer to the AHRI directory www.ahridirectory.org

Additional ratings and system combinations can be accessed via the Ratings Database here: MyBryantRatings

CATALOG ORDERING NUMBERS

Size	Model Number
18	GH5SAN51800A
19	GH5SAN51900A
24	GH5SAN52400A
30	GH5SAN53000A
31	GH5SAN53100A
36	GH5SAN53600A
42	GH5SAN54200A
48	GH5SAN54801A
60	GH5SAN56000A

Standard Features

Feature	18	19	24	30	31	36	42	48	60
Puron Advance™ Refrigerant	X	X	X	X	X	X	X	X	X
Scroll Compressor	X	X	X	X	X	X	X	X	X
Field Installed Filter Drier	X	X	X	X	X	X	X	X	X
Front Seating Service Valves	X	X	X	X	X	X	X	X	X
Internal Pressure Relief Valve	X	X	X	X	X	X	X	X	X
Internal Thermal Overload	X	X	X	X	X	X	X	X	X
Long Line capability	X	X	X	X	X	X	X	X	X
Low Ambient capability with Kit	X	X	X	X	X	X	X	X	X
Suction Line Accumulator	X	X	X	X	X	X	X	X	X
Loss of Charge Switch	X	X	X	X	X	X	X	X	X
Field Installed Liquid Line Solenoid Valve		X							

X = Standard

Physical Data

UNIT SIZE SERIES	18	19	24	30	31	36	42	48	60
Compressor Type	Scroll								
REFRIGERANT	Puron Advance™ (R-454B)								
Factory Charge lb (kg)*	6.5(2.95)	8.6 (3.90)	5.4(2.45)	6.1(2.77)	8.1(3.67)	7.6(3.45)	7.3(3.31)	10.5(4.76)	8.7(3.95)
Outdoor Heating Piston #	42	40	46	52	46	52	61	65	70
COND FAN	Forward Swept or Propeller Type, Direct Drive								
Air Discharge	Vertical								
Air Qty (CFM)	1900	2300	3500	3000	3100	3500	3000	3800	4300
Motor HP	1/12	1/12	1/10	1/10	1/10	1/4	1/5	1/4	1/4
Motor RPM	800	800	825	825	825	825	1100	1110	800
COND COIL									
Face Area (Sq ft)	17.2	19.3	19.3	21.4	21.4	17.2	17.2	21.4	22.6
Fins per In.	20	20	20	20	20	20	20	20	20
Rows	1	2	1	1	2	2	2	2	2
Circuits	7	6	6	7	8	8	10	12	12
VALVE CONNECT. (In. ID)									
Vapor	3/4	3/4	3/4	3/4	3/4	3/4	7/8	7/8	7/8
Liquid	3/8"								
REFRIGERANT TUBES* (In. OD)									
Rated Vapor†	5/8	5/8	5/8	3/4	3/4	3/4	7/8	7/8	1 1/8
Rated Liquid Line‡	3/8"								

*. For 15 ft. lineset
†. Units are rated with 25 ft (7.6 m) of lineset length. See Vapor Line Sizing and Cooling Capacity Loss table when using other sizes and lengths of lineset.
‡. See Liquid Line Sizing For Cooling Only Systems with Puron Advance™ (R-454B) Refrigerant tables.
Note: See unit Installation Instructions for proper installation

Vapor Line Sizing and Cooling Capacity Loss

Acceptable vapor line diameters provide adequate oil return to the compressor while avoiding excessive capacity loss. The suction line diameters shown in the chart below are acceptable for HP systems with Puron Advance™ refrigerant:

Table 1 – Vapor Line Sizing and Cooling Capacity Losses - Puron Advance™ Refrigerant 1-Stage Heat Pump Applications

Unit Nominal Size (kBtuh)	Maximum Liquid Line Diameters (In. OD)	Acceptable Vapor Line Diameters (In. OD)	Cooling Capacity Loss (%) Total Equivalent Line Length ft. 1-Stage HP with Puron Advance™ Refrigerant								
			Total Equivalent Line Length (ft)								
			Standard Application		Long Line Application Requires Accessories						
			26-50	51-80	81-100	101-125	126-150	151-175	176-200	201-225	226-250
18	3/8	1/2	2	5	6	8	10	12	13	15	16
		5/8	1	2	3	4	4	5	6	7	7
19	3/8	1/2	2	5	6	8	10	12	13	15	16
		5/8	1	2	3	4	4	5	6	7	7
24	3/8	5/8	1	3	4	5	6	7	8	9	10
		3/4	1	1	2	3	3	4	4	5	5
30	3/8	5/8	2	4	5	6	8	9	10	11	13
		3/4	1	2	2	3	4	4	5	6	6
		7/8	1	1	2	2	2	3	3	4	4
31	3/8	5/8	2	4	5	6	8	9	10	11	13
		3/4	1	2	2	3	4	4	5	6	6
		7/8	1	1	2	2	2	3	3	4	4
36	3/8	5/8	2	4	6	7	9	10	12	13	14
		3/4	1	2	3	3	4	5	6	6	7
		7/8	1	1	2	2	3	3	4	4	5
42	3/8	3/4	1	3	3	4	5	6	7	8	9
		7/8	1	2	2	3	3	4	4	5	6
48	3/8	3/4	1	3	4	5	6	8	9	10	11
		7/8	1	2	2	3	4	4	5	6	6
60	3/8	3/4	2	4	5	7	8	10	11	12	14
		7/8	1	2	3	4	5	6	6	7	8
		1 1/8	0	0	0	1	1	1	2	2	3

Applications in this area are long Line. Accessories are required as shown in Accessory Usage Guideline Table

Refrigerant Piping Length Limitations

Maximum Line Lengths:

The maximum allowable total equivalent length for heat pumps varies depending on the vertical separation. See the tables below for allowable lengths depending on whether the outdoor unit is on the same level, above or below the outdoor unit.

Maximum Line Lengths for Heat Pump Applications

	MAXIMUM ACTUAL LENGTH* ft (m)	MAXIMUM EQUIVALENT LENGTH ft (m)	MAXIMUM VERTICAL SEPARATION ft (m)
Units on equal level	200 (61)	250 (76.2)	N/A
Outdoor unit ABOVE indoor unit	200 (61)	250 (76.2)	200 (61)
Outdoor unit BELOW indoor unit	See Table 'Maximum Total Equivalent Length: Outdoor Unit BELOW Indoor Unit'		

. Maximum actual length not to exceed 200 ft (61 m)

Maximum Total Equivalent Length* - Outdoor Unit BELOW Indoor Unit

Size	Liquid Line Diameter w/ TXV	HP with Puron Advance™ Refrigerant - Maximum Total Equivalent Length Vertical Separation ft (m) Outdoor unit BELOW indoor unit;						
		0-20 (0 - 6.1)	21-30 (6.4 - 9.1)	31-40 (9.4 - 12.2)	41-50 (12.5 - 15.2)	51-60 (15.5 - 18.3)	61-70 (18.6 - 21.3)	71-80 (21.6 - 24.4)
18,000 / 19,000	3/8	250*	250*	250*	250*	250*	250*	250*
24,000	3/8	250*	250*	250*	250*	250*	250*	250*
30,000 / 31,000	3/8	250*	250*	250*	250*	250*	250*	250*
36,000	3/8	250*	250*	250*	250*	250*	250*	250*
42,000	3/8	250*	250*	250*	250*	250*	250*	150
48,000	3/8	250*	250*	250*	250*	230	160	—
60,000	3/8	250*	225*	190	150	110	—	—

*.Total equivalent length accounts for losses due to elbows or fitting. See the Long Line Guideline for details.
— = outside acceptable range

Long Line Applications

An application is considered Long Line when the refrigerant level in the system requires the use of accessories to maintain acceptable refrigerant management for systems reliability. Defining a system as long line depends on the liquid line diameter, actual length of the tubing, and vertical separation between the indoor and outdoor units.

For Heat Pump systems, any application using a 3/8" liquid line with equivalent length greater than 80ft (24.4m) is considered long line.

Accessories

KIT NUMBER	KIT NAME	18	19	24	30	31	36	42	48	60
KSAFT0101AAA	Evaporator Freeze Stat	X	X	X	X	X	X	X	X	X
KAATD0101TDR	Time Delay Relay(90 sec. TDR)	X	X	X	X	X	X	X	X	X
KAATD0201TDR	Time Delay Relay(30 sec. TDR)	X	X	X	X	X	X	X	X	X
KSALA0301410	Low Ambient Cooling Pressure Switch	X	X	X	X	X	X	X	X	X
KSALA1001AAA	MotorMaster® Low Ambient Controller	X	X	X	X	X	X	X	X	X
KSAHS2501AAA	Hard Start Kit	X	X	X	X	X	X	X	X	X
KSAHS2701AAA*	Hard Start Kit							X	X	X
KSACY0101AAA	Cycle Protector	X	X	X	X	X	X	X	X	X
KSASF0201AAA	Support Foot Assembly	X	X	X	X	X	X	X	X	X
KHALS0401LLS†	Solenoid Valve Kit	X		X	X	X	X	X	X	X
KAAWS0101AAA	Winter Start Kit	X	X	X	X	X	X	X	X	X
KAAHI0601PUR	High Pressure Switch	X	X	X	X	X	X	X	X	X
KAACH1701AAA	Crankcase Heater	X	X	X	X	X	X			
KAACH1601AAA	Crankcase Heater							X	X	X
KAACH2501AAA	Crankcase Heater (460-3)						X			
KAACH2601AAA	Crankcase Heater (460-3)								X	X
KHAIR0201AAA	Isolation Relay	X	X	X	X	X	X	X	X	X
KHASS0606MPK	Snow Stand	X	X	X	X	X	X	X	X	X
KSASH2301COP	Sound Blanket	X	X	X	X	X	X			
KSASH2401COP	Sound Blanket							X	X	X

*. Only use on models that have a “C” in position 15 of the 16 digit model number
†. Do not use hard shutoff TXV with liquid solenoid valve

X= Accessory

Accessory Usage Guideline

Accessory	REQUIRED FOR LOW-AMBIENT COOLING APPLICATIONS (Below 55°F / 12.8°C)	REQUIRED FOR LONG LINE APPLICATIONS*	REQUIRED FOR SEA COAST APPLICATIONS (Within 2 miles / 3.22 km)
Accumulator	Standard	Standard	Standard
Ball Bearing Fan Motor	Standard	Standard	Standard
Compressor Start Assist Capacitor and Relay†	Yes	Yes	No
Crankcase Heater	Yes	Yes	No
Evaporator Freeze Thermostat	Yes	No	No
Isolation Relay	Yes	No	No
Liquid Line Solenoid Valve	No	See Long-Line Guideline	No
Motor Master® Control or Low Ambient Switch	Yes	No	No
Support Feet	Recommended	No	Recommended

*. For tubing line sets between 80 and 200 ft. (24.38 and 60.96 m), refer to Residential Split-System Long Line Application Guideline.
†. Not used on 3-phase units

Accessory Description and Usage

1. Ball-Bearing Fan Motor

A fan motor with ball bearings which permits speed reduction while maintaining bearing lubrication.

2. Compressor Start Assist - Capacitor and Relay

Start capacitor and relay gives a ”hard” boost to compressor motor at each start up.

Usage Guideline:

Required for single-phase scroll compressors in the following applications:

Long line

Low ambient cooling

Suggested for all compressors in areas with a history of low voltage problems.

3. Crankcase Heater

An electric resistance heater which mounts to the base of the compressor to keep the lubricant warm during off cycles. Improves compressor lubrication on restart and minimizes the chance of liquid slugging.

Usage Guideline:

Required in low ambient cooling applications.

Required in long line applications.

Suggested in all commercial applications.

4. Cycle Protector

The cycle protector is designed to prevent compressor short cycling. This control provides an approximate 5-minute delay after power to the compressor has been interrupted for any reason, including power outage, protector control trip, thermostat jiggling, or normal cycling.

5. Evaporator Freeze Thermostat

An SPST temperature-actuated switch that stops unit operation when evaporator reaches freeze-up conditions.

Usage Guideline:

Required when low ambient kit has been added.

6. Low-Ambient Pressure Switch Kit

A long life pressure switch which is mounted to outdoor unit service valve. It is designed to cycle the outdoor fan motor in order to maintain head pressure within normal operating limits (approximately 100 psig to 225 psig). The control will maintain working head pressure at low-ambient temperatures down to 0°F (-18°C) when properly installed and also using wind baffles. Instructions provided in accessory kit.

Usage Guideline:

A Low-Ambient Pressure Switch must be used when cooling operation is used at outdoor temperatures below 55°F (12.8°C).

7. MotorMaster® Low-Ambient Controller

A fan-speed control device activated by a temperature sensor, designed to control condenser fan motor speed in response to the saturated, condensing temperature during operation in cooling mode only. For outdoor temperatures down to 0°F/–17.8°C), it maintains condensing temperature at 100°F ±10°F (37.8°C ±5.5°C).

Usage Guideline:

A MotorMaster® Low Ambient Controller or Low-Ambient Pressure Switch must be used when cooling operation is used at outdoor temperatures below 55°F (12.8°C).

Suggested for all commercial applications.

8. Outdoor Air Temperature Sensor

This device enables the thermostat to display the outdoor temperature. This device is also required to enable special thermostat features such as auxiliary heat lock out.

Usage Guideline:

Suggested for use with compatible thermostats.

9. Sound Blanket

Wraparound sound reducing cover for the compressor. Reduces the sound level of the compressor.

Usage Guideline:

Suggested when unit is installed closer than 15 ft (4.57 m) to quiet areas, bedrooms, etc.

Suggested when unit is installed between two houses less than 10 ft (3 m) apart.

Accessory Description and Usage Continued...

10. Support Feet

Four or five stick-on plastic feet that raise the unit 4 in. (101.6 mm) above the mounting pad. This allows sand, dirt, and other debris to be flushed from the unit base, minimizing corrosion.

Usage Guideline:

Suggested in the following applications:

Coastal installations.

Windy areas or where debris is normally circulating.

Rooftop installations.

For improved sound ratings.

11. Time-Delay Relay

An SPST delay relay which briefly continues operation of indoor blower motor to provide additional cooling after the compressor cycles off.

NOTE: Most indoor unit controls include this feature. For those that do not, use the guideline below.

Usage Guideline:

For improved efficiency ratings for certain combinations of indoor and outdoor units. Refer to AHRI Directory of Certified Product Performance (AHRI Directory).

When a Time-Delay Relay (TDR) is called for in the AHRI Directory, use a 30 second TDR for Micro Channel Indoor units and use a 90 second TDR for Round Tube Plate Fin Indoor units.

12. Winter Start Control

This control is designed to alleviate nuisance opening of the low-pressure switch by bypassing it for the first 3 minutes of operation.

Electrical Data

UNIT SIZE	V/PH	OPER VOLTS*		COMPR		FAN	MCA	MAX FUSE† or CKT BRK AMPS
		MAX	MIN	LRA	RLA	FLA		
18	208-230-1	253	197	45.1	8.3	0.50	10.9	15
19				45.1	8.3	0.50	11.0	15
24				64.4	10.3	0.60	13.5	20
30				67.0	12.5	0.70	16.3	25
31				67.0	12.5	0.70	16.3	25
36				86.0	14.4	1.20	19.2	30
42				123.0	19.0	1.05	24.9	40
48				126.0	22.4	1.40	29.4	40
60				157.0	23.7	1.50	31.1	50

*.Permissible limits of the voltage range at which the unit will operate satisfactorily
†.Time-Delay fuse.

FLA—Full Load Amps
LRA—Locked Rotor Amps
MCA—Minimum Circuit Amps
RLA—Rated Load Amps
NOTE: Control circuit is 24-V on all units and requires external power source. Copper wire must be used from service disconnect to unit.
All motors/compressors contain internal overload protection.
Short Circuit Current Rating (SCCR): 5kA rms

Sound Power Level without Sound Shield

UNIT SIZE	STANDARD RATING (dBA)	TYPICAL OCTAVE BAND SPECTRUM (dB, without tone adjustment)						
		125	250	500	1000	2000	4000	8000
18	72	64	66	67	68	63	60	55
19	71	68	66	66	68	62	61	57
24	71	66	65	64	64	59	56	55
30	70	65	64	66	64	61	56	54
31	68	68	64	65	64	60	57	54
36	76	71	70	69	66	63	59	53
42	76	70	71	71	72	65	63	60
48	76	70	72	70	68	63	62	61
60	74	67	69	69	71	63	61	63

Sound Power Level with Accessory Sound Shield

UNIT SIZE	STANDARD RATING (dBA)	TYPICAL OCTAVE BAND SPECTRUM (dB, without tone adjustment)						
		125	250	500	1000	2000	4000	8000
18	70	64	66	66	67	62	59	53
19	70	69	65	66	67	61	60	54
24	68	67	65	64	65	60	54	50
30	67	65	65	65	62	59	54	51
31	67	67	65	65	62	58	54	51
36	75	70	69	68	65	62	58	51
42	74	71	72	71	70	64	62	58
48	75	71	72	70	67	62	60	56
60	72	69	68	70	69	61	58	59

NOTE: Tested in compliance with AHRI 270 but not listed with AHRI.

Charging Subcooling (TXV-Type Expansion Device)

UNIT SIZE-VOLTAGE	REQUIRED SUBCOOLING °F (°C)
18	6 (3.3)
19	6 (3.3)
24	6 (3.3)
30	12 (6.7)
31	7 (3.9)
36	10 (5.6)
42	12 (6.7)
48	13 (7.2)
60	7 (3.9)

Manufacturer reserves the right to change, at any time, specifications and designs without notice and without obligations.

Dimensions

UNIT	SERIES	ELECTRICAL CHARACTERISTICS				A		B		C		D		E		F		G		H		I		J		K		OPERATING WEIGHT		SHIPPING WEIGHT		SHIPPING LENGTH / WIDTH (Sq.)		SHIPPING HEIGHT	
		208-230-1-60	208/230-3-60	460-3-60	575-3-60	INCH	MM	INCH	MM	INCH	MM	INCH	MM	INCH	MM	INCH	MM	INCH	MM	INCH	MM	INCH	MM	INCH	MM	INCH	MM	Lbs	Kgs	Lbs	Kgs	INCH	MM	INCH	MM
GH5SA*51800A	A	Y	N	N	N	31 3/16	792.5	31 11/16	804.3	5/8	15.9	6 9/16	166.1	24 11/16	626.3	9 1/8	231.3	1 1/8	28.2	3 13/16	97.4	12 1/2	317.5	11	279.4	11 3/4	298.5	147	66.7	167	75.7	32 3/16	817.9	34 7/16	875.2
GH5SA*51900A	A	Y	N	N	N	31 3/16	792.5	35 1/16	890.7	5/8	15.9	6 9/16	166.1	24 11/16	626.3	9 1/8	231.3	1 1/8	28.2	3 13/16	97.4	14 1/2	368.3	15 3/4	400.1	15 3/4	400.1	150	68.0	171	77.6	32 3/16	817.9	37 7/8	961.6
GH5SA*52400A	A	Y	N	N	N	31 3/16	792.5	35 1/16	890.7	5/8	15.9	6 9/16	166.1	24 11/16	626.3	9 1/8	231.3	1 1/8	28.2	3 13/16	97.4	13	330.2	15 1/8	384.2	16 1/2	419.1	175	79.4	195	88.5	32 3/16	817.9	37 7/8	961.6
GH5SA*53000A	A	Y	N	N	N	31 3/16	792.5	38 7/16	977.1	3/4	19.1	6 9/16	166.1	24 11/16	626.3	9 1/8	231.3	1 1/8	28.2	3 13/16	97.4	14	355.6	14 3/4	374.7	15 1/2	393.7	167	75.7	188	85.3	32 3/16	817.9	41 1/4	1048.0
GH5SA*53100A	A	Y	N	N	N	31 3/16	792.5	38 7/16	977.1	3/4	19.1	6 9/16	166.1	24 11/16	626.3	9 1/8	231.3	1 1/8	28.2	3 13/16	97.4	19	482.6	16	406.4	17 1/2	444.5	178	80.7	198	89.8	32 3/16	817.9	41 1/4	1048.0
GH5SA*53600A	A	Y	N	N	N	31 3/16	792.5	31 11/16	804.3	3/4	19.1	6 9/16	166.1	24 11/16	626.3	9 1/8	231.3	1 1/8	28.2	3 13/16	97.4	12	304.8	14 1/8	358.8	16 1/4	412.8	172	78.0	192	87.1	32 3/16	817.9	34 7/16	875.2
GH5SA*54200A	A	Y	N	N	N	31 3/16	792.5	31 11/16	804.3	7/8	22.2	6 9/16	166.1	24 11/16	626.3	9 1/8	231.3	1 1/8	28.2	3 13/16	97.4	13 1/2	342.9	14 1/4	362.0	15	381.0	203	92.1	223	101.2	32 3/16	817.9	34 7/16	875.2
GH5SA*54800A	A	Y	N	N	N	31 3/16	792.5	38 7/16	977.1	7/8	22.2	6 9/16	166.1	24 11/16	626.3	9 1/8	231.3	1 1/8	28.2	3 13/16	97.4	15	381.0	17 1/4	438.2	19 1/2	495.3	231	104.8	252	114.3	32 3/16	817.9	41 1/4	1048.0
GH5SA*54801A	A	Y	N	N	N	31 3/16	792.5	38 7/16	977.1	7/8	22.2	6 9/16	166.1	24 11/16	626.3	9 1/8	231.3	1 1/8	28.2	3 13/16	97.4	15	381.0	17 1/4	438.2	19 1/2	495.3	231	104.8	252	114.3	32 3/16	817.9	41 1/4	1048.0
GH5SA*56000A	A	Y	N	N	N	35	889.0	35 1/16	890.7	7/8	22.2	6 9/16	166.1	28 7/16	722.8	9 1/8	231.3	1 1/8	28.2	3 13/16	97.4	13	330.2	15 1/2	393.7	16 3/4	425.5	233	105.7	254	115.2	36	914.9	37 7/8	961.6

Y=YES
N=NO

NOTES:

1. CENTER OF GRAVITY .

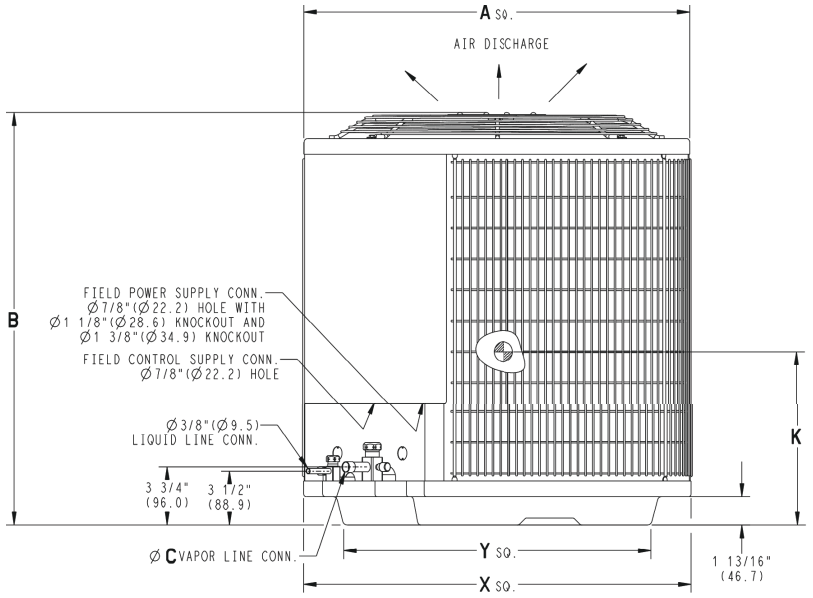

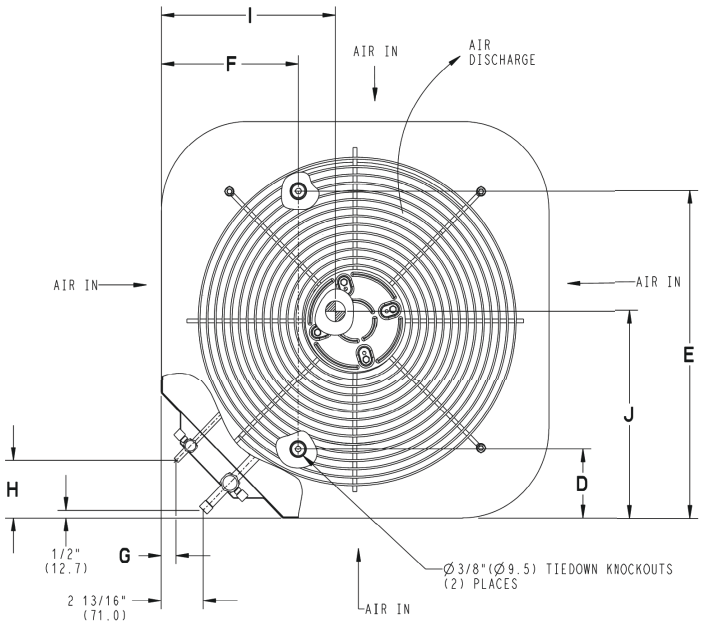

UNIT SIZE	"X" MINIMUM GROUND MOUNTING PAD APPLICATION DIMENSIONS		"Y" MINIMUM ROOF-TOP MOUNTING PAD APPLICATION DIMENSIONS	
-	23 1/8	587.3	17 7/8	454.6
-	25 3/4	654.0	20 7/16	518.5
18,24,30,36,42,48	31 3/16	792.5	22 15/16	583.2
60	35	889.0	26 3/4	679.7

NOTE: ALL DIMENSIONS IN INCH (MM)

U.S. ECCN: Not Subject to Regulation (N.S.R.)

SD5922-4 REV. A

Manufacturer reserves the right to change, at any time, specifications and designs without notice and without obligations.

Clearances

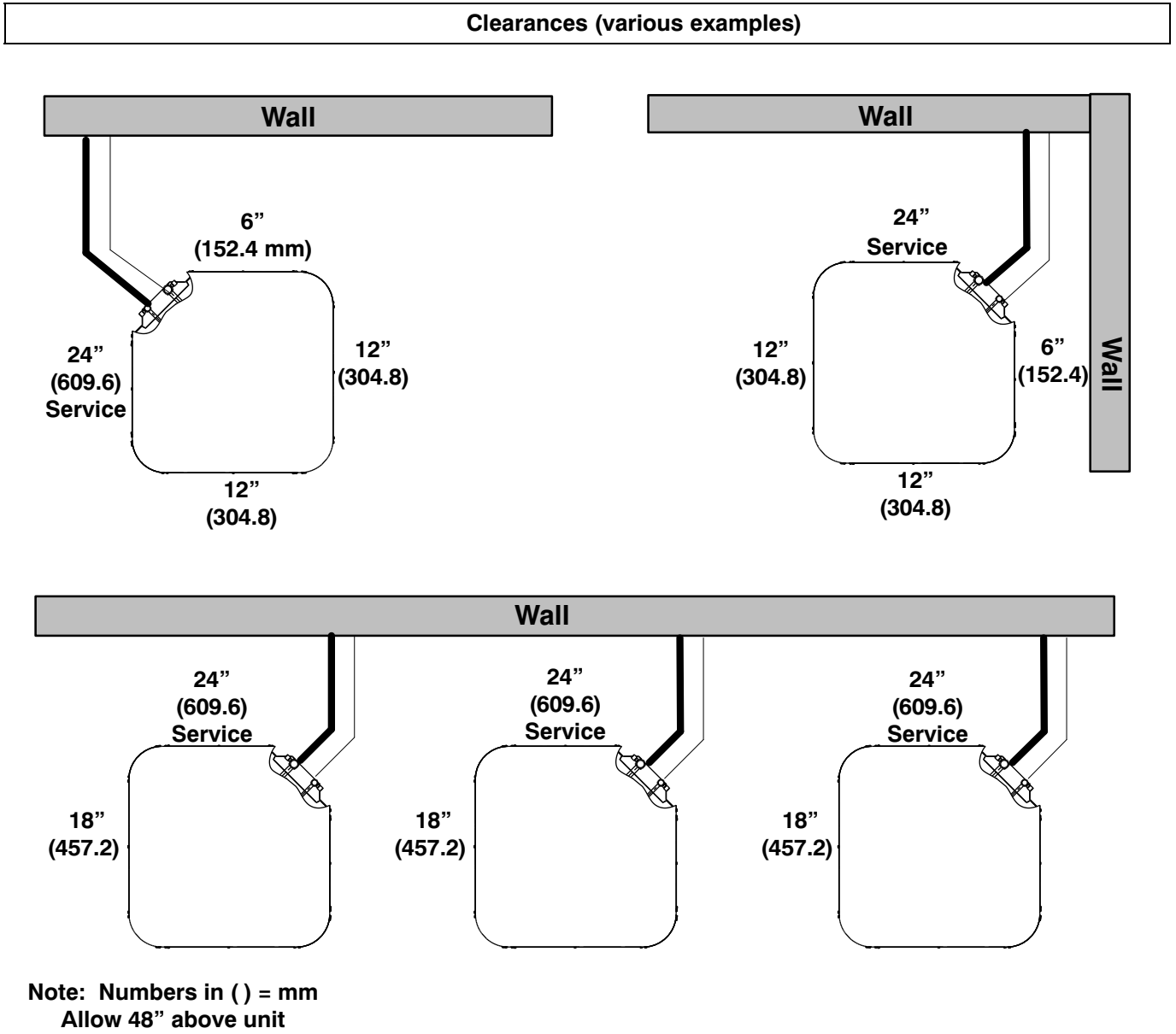

IMPORTANT: When installing multiple units in an alcove, roof well, or partially enclosed area, ensure there is adequate ventilation to prevent re-circulation of discharge air.

Manufacturer reserves the right to change, at any time, specifications and designs without notice and without obligations.

Balance Point Worksheet

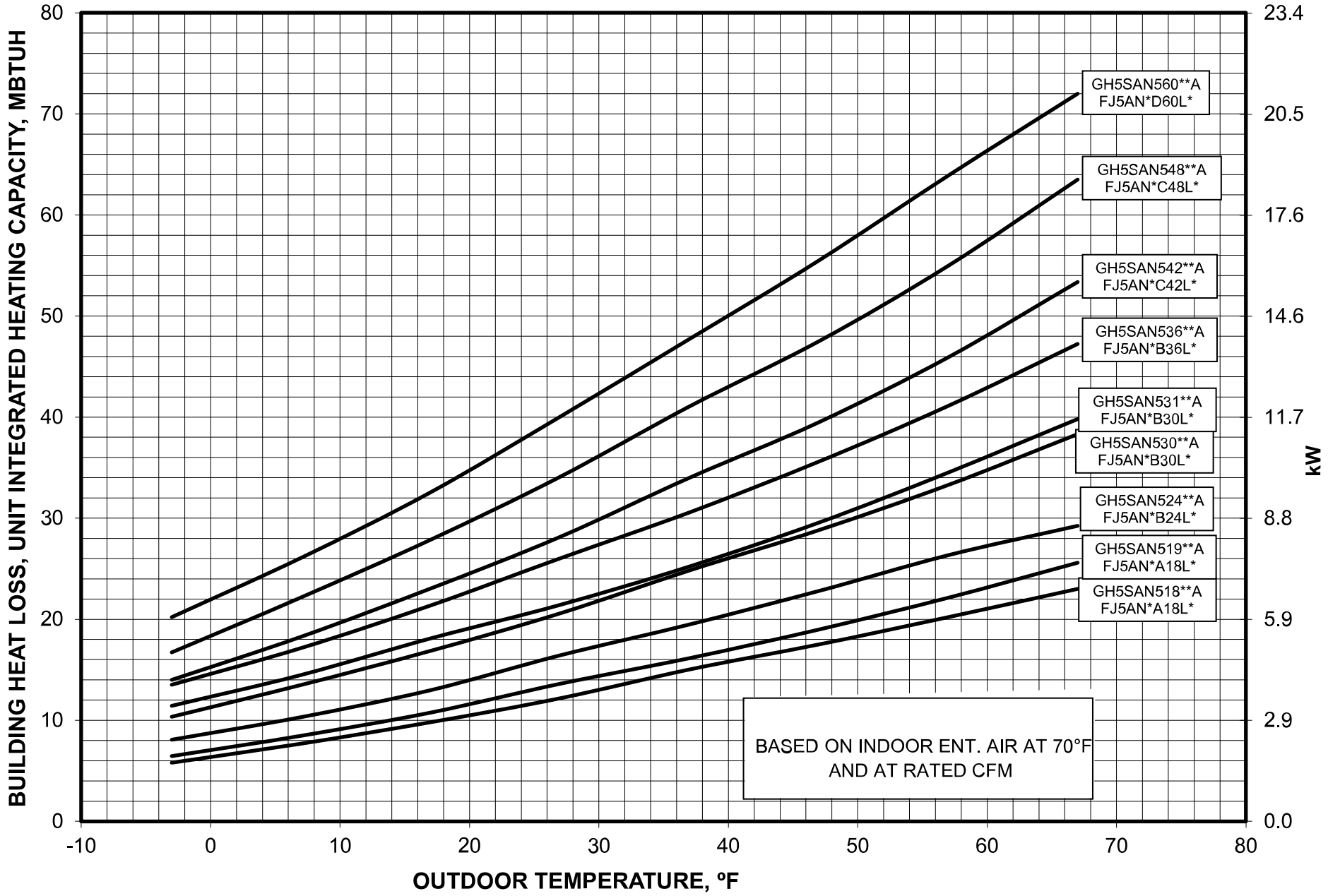

Manufacturer reserves the right to change, at any time, specifications and designs without notice and without obligations.

DETAILED COOLING CAPACITIES

EVAPORATOR AIR		CONDENSER ENTERING AIR TEMPERATURES °F (°C)																	
		75.0 (23.9)			85.0 (29.4)			95.0 (35.0)			105.0 (40.6)			115.0 (46.1)			125.0 (51.7)		
CFM	EWB	Capacity MBtuh		Total Sys.	Capacity MBtuh		Total Sys.	Capacity MBtuh		Total Sys.	Capacity MBtuh		Total Sys.	Capacity MBtuh		Total Sys.	Capacity MBtuh		Total Sys.
		Total	Sens‡	KW**	Total	Sens‡	KW**	Total	Sens‡	KW**	Total	Sens‡	KW**	Total	Sens‡	KW**	Total	Sens‡	KW**
GH5SAN518AOutdoor Section With FJ5AN*A18L* Indoor Section**																			
540	72.0 (22.2)	20.56	10.51	1.16	19.66	10.18	1.31	18.67	9.82	1.47	17.45	9.38	1.64	16.46	9.04	1.84	15.26	8.62	2.06
	67.0 (19.4)	18.72	13.04	1.17	17.91	12.71	1.32	17	12.35	1.48	16.02	11.95	1.65	15.01	11.56	1.85	13.93	11.13	2.07
	63 (17.2)††	17.38	12.54	1.18	16.62	12.21	1.33	15.78	11.85	1.48	14.81	11.41	1.66	13.94	11.07	1.86	12.94	10.64	2.08
	62.0 (16.7)	17.16	15.51	1.18	16.43	15.16	1.33	15.64	14.77	1.48	14.82	14.82	1.66	14.02	14.02	1.85	13.18	13.18	2.07
	57.0 (13.9)	16.76	16.76	1.18	16.16	16.16	1.33	15.49	15.49	1.49	14.78	14.78	1.66	14	14	1.85	13.16	13.16	2.07
600	72.0 (22.2)	20.83	10.93	1.17	19.9	10.59	1.32	18.88	10.23	1.48	17.78	9.85	1.66	16.61	9.45	1.85	15.36	9.01	2.08
	67.0 (19.4)	18.99	13.73	1.19	18.15	13.39	1.33	17.22	13.02	1.49	16.22	12.63	1.67	15.18	12.21	1.86	14.07	11.78	2.09
	63 (17.2)††	17.65	13.18	1.19	16.86	12.84	1.34	16	12.47	1.5	14.96	12.03	1.67	14.1	11.67	1.87	13.08	11.24	2.09
	62.0 (16.7)	17.5	16.41	1.19	16.76	16.03	1.34	15.99	15.99	1.5	15.13	15.13	1.67	14.41	14.41	1.87	13.53	13.53	2.09
	57.0 (13.9)	17.3	17.3	1.2	16.67	16.67	1.34	15.97	15.97	1.5	15.21	15.21	1.67	14.39	14.39	1.87	13.51	13.51	2.09
675	72.0 (22.2)	21.1	11.43	1.19	20.14	11.09	1.34	19.08	10.73	1.5	17.95	10.33	1.68	16.75	9.93	1.87	15.49	9.5	2.1
	67.0 (19.4)	19.26	14.55	1.2	18.39	14.21	1.35	17.43	13.83	1.51	16.41	13.44	1.69	15.33	13.01	1.88	14.21	12.55	2.1
	63 (17.2)††	17.91	13.95	1.21	17.1	13.6	1.36	16.21	13.22	1.52	15.13	12.77	1.69	14.22	12.38	1.89	13.22	11.94	2.11
	62.0 (16.7)	17.91	17.91	1.21	17.24	17.24	1.36	16.49	16.49	1.52	15.68	15.68	1.69	14.77	14.77	1.88	13.88	13.88	2.11
	57.0 (13.9)	17.88	17.88	1.21	17.21	17.21	1.36	16.47	16.47	1.52	15.66	15.66	1.69	14.78	14.78	1.88	13.87	13.87	2.11
GH5SAN519A Outdoor Section With FJ5AN*A18L*Indoor Section**																			
525	72.0 (22.2)	21.56	10.94	1.12	20.70	10.62	1.27	19.74	10.27	1.42	18.70	9.89	1.59	17.57	9.50	1.79	16.37	9.06	2.00
	67.0 (19.4)	19.50	13.43	1.14	18.71	13.11	1.28	17.84	12.75	1.44	16.90	12.37	1.61	15.87	11.97	1.80	14.80	11.53	2.02
	63.0 (17.2)††	18.02	12.89	1.15	17.29	12.57	1.29	16.48	12.21	1.45	15.59	11.84	1.62	14.65	11.43	1.81	13.65	10.98	2.03
	62.0 (16.7)	17.75	15.88	1.15	17.05	15.54	1.29	16.28	15.17	1.45	15.45	14.75	1.62	14.59	14.59	1.81	13.77	13.77	2.02
	57.0 (13.9)	17.19	17.19	1.15	16.63	16.63	1.30	16.00	16.00	1.45	15.31	15.31	1.62	14.57	14.57	1.81	13.75	13.75	2.02
605	72.0 (22.2)	22.01	11.54	1.14	21.11	11.21	1.28	20.11	10.85	1.44	19.02	10.47	1.61	17.85	10.07	1.80	16.56	9.61	2.02
	67.0 (19.4)	19.93	14.39	1.15	19.11	14.06	1.30	18.20	13.70	1.46	17.22	13.31	1.63	16.16	12.89	1.82	15.04	12.43	2.03
	63.0 (17.2)††	18.43	13.79	1.17	17.66	13.45	1.31	16.82	13.09	1.47	15.91	12.66	1.64	14.93	12.28	1.83	13.88	11.84	2.05
	62.0 (16.7)	18.25	17.15	1.17	17.54	16.78	1.31	16.78	16.78	1.47	16.01	16.01	1.64	15.20	15.20	1.83	14.33	14.33	2.04
	57.0 (13.9)	18.01	18.01	1.17	17.40	17.40	1.31	16.73	16.73	1.47	15.98	15.98	1.64	15.18	15.18	1.83	14.30	14.30	2.04
675	72.0 (22.2)	22.31	12.04	1.16	21.38	11.70	1.30	20.35	11.34	1.46	19.23	10.95	1.63	18.02	10.53	1.82	16.70	10.07	2.03
	67.0 (19.4)	20.22	15.20	1.17	19.37	14.86	1.32	18.44	14.49	1.47	17.43	14.09	1.64	16.35	13.66	1.84	15.18	13.19	2.05
	63.0 (17.2)††	18.71	14.54	1.18	17.92	14.20	1.33	17.05	13.82	1.48	16.11	13.42	1.66	15.10	13.00	1.85	14.05	12.52	2.06
	62.0 (16.7)	18.67	18.67	1.18	17.99	17.99	1.33	17.27	17.27	1.48	16.49	16.49	1.65	15.64	15.64	1.84	14.72	14.72	2.06
	57.0 (13.9)	18.60	18.60	1.18	17.96	17.96	1.33	17.25	17.25	1.48	16.46	16.46	1.65	15.62	15.62	1.84	14.70	14.70	2.06

Manufacturer reserves the right to change, at any time, specifications and designs without notice and without obligations.

DETAILED COOLING CAPACITIES (Continued)

EVAPORATOR AIR		CONDENSER ENTERING AIR TEMPERATURES °F (°C)																	
CFM	EWB	75.0 (23.9)			85.0 (29.4)			95.0 (35.0)			105.0 (40.6)			115.0 (46.1)			125.0 (51.7)		
		Capacity MBtuh		Total Sys. KW**	Capacity MBtuh		Total Sys. KW**	Capacity MBtuh		Total Sys. KW**	Capacity MBtuh		Total Sys. KW**	Capacity MBtuh		Total Sys. KW**	Capacity MBtuh		Total Sys. KW**
		Total	Sens‡		Total	Sens‡		Total	Sens‡		Total	Sens‡		Total	Sens‡		Total	Sens‡	
GH5SAN524A Outdoor Section With FJ5AN*B24L*Indoor Section**																			
665	72.0 (22.2)	26.92	13.97	1.47	25.78	13.53	1.65	24.57	13.07	1.85	23.28	12.59	2.09	21.88	12.06	2.35	20.37	11.5	2.64
	67.0 (19.4)	24.56	17.17	1.48	23.51	16.72	1.66	22.4	16.25	1.87	21.2	15.74	2.1	19.95	15.23	2.36	18.57	14.66	2.66
	63 (17.2)††	22.82	16.55	1.49	21.83	16.09	1.67	20.8	15.62	1.87	19.7	15.13	2.11	18.52	14.6	2.37	17.26	14.04	2.67
	62.0 (16.7)	22.46	20.29	1.49	21.5	19.83	1.67	20.51	19.34	1.88	19.46	18.82	2.11	18.35	18.23	2.37	17.24	17.24	2.67
	57.0 (13.9)	21.6	21.6	1.5	20.84	20.84	1.67	20.03	20.03	1.88	19.17	19.17	2.11	18.24	18.24	2.37	17.21	17.21	2.67
800	72.0 (22.2)	27.58	14.93	1.5	26.37	14.48	1.68	25.1	14.01	1.89	23.74	13.51	2.12	22.27	12.98	2.38	20.68	12.41	2.67
	67.0 (19.4)	25.21	18.75	1.51	24.1	18.29	1.69	22.94	17.81	1.9	21.69	17.31	2.13	20.37	16.74	2.39	18.95	16.16	2.69
	63 (17.2)††	23.46	18.03	1.52	22.42	17.56	1.7	21.33	17.07	1.91	20.17	16.56	2.14	18.93	16.02	2.4	17.6	15.42	2.7
	62.0 (16.7)	23.23	22.42	1.52	22.25	21.9	1.7	21.3	21.17	1.91	20.27	20.27	2.14	19.23	19.23	2.4	18.1	18.1	2.69
	57.0 (13.9)	22.91	22.91	1.52	22.07	22.07	1.7	21.19	21.19	1.91	20.24	20.24	2.14	19.21	19.21	2.4	18.06	18.06	2.69
900	72.0 (22.2)	27.91	15.6	1.52	26.68	15.15	1.7	25.36	14.67	1.91	23.97	14.17	2.14	22.46	13.63	2.4	20.82	13.06	2.7
	67.0 (19.4)	25.56	19.86	1.54	24.42	19.39	1.72	23.22	18.9	1.92	21.94	18.39	2.15	20.58	17.82	2.42	19.11	17.22	2.71
	63 (17.2)††	23.81	19.06	1.55	22.74	18.59	1.73	21.61	18.09	1.93	20.41	17.56	2.16	19.16	17	2.43	17.79	16.39	2.72
	62.0 (16.7)	23.75	23.75	1.55	22.82	22.82	1.72	21.88	21.88	1.93	20.87	20.87	2.16	19.78	19.78	2.42	18.58	18.58	2.72
	57.0 (13.9)	23.67	23.67	1.55	22.79	22.79	1.72	21.85	21.85	1.93	20.85	20.85	2.16	19.76	19.76	2.42	18.56	18.56	2.72
GH5SAN530A Outdoor Section With FJ5AN*B30L*Indoor Section**																			
915	72.0 (22.2)	34.58	18.36	1.89	33	17.76	2.13	31.31	17.13	2.39	29.54	16.47	2.68	27.68	15.79	3.01	25.76	15.1	3.4
	67.0 (19.4)	31.39	22.78	1.88	29.94	22.17	2.11	28.4	21.53	2.37	26.78	20.87	2.65	25.09	20.18	2.98	23.34	19.47	3.36
	63 (17.2)††	29.09	21.88	1.87	27.74	21.27	2.1	26.29	20.62	2.35	24.78	19.95	2.63	23.2	19.24	2.96	21.56	18.54	3.33
	62.0 (16.7)	28.7	27.11	1.87	27.4	26.47	2.1	26.05	25.76	2.35	24.68	24.68	2.63	23.4	23.4	2.96	21.89	21.89	3.34
	57.0 (13.9)	28.06	28.06	1.87	26.99	26.99	2.1	25.85	25.85	2.35	24.64	24.64	2.63	23.36	23.36	2.96	22.01	22.01	3.34
1000	72.0 (22.2)	34.98	18.98	1.92	33.35	18.37	2.16	31.62	17.73	2.42	29.83	17.08	2.7	27.93	16.4	3.04	25.94	15.69	3.43
	67.0 (19.4)	31.78	23.8	1.91	30.3	23.19	2.14	28.72	22.54	2.39	27.06	21.85	2.68	25.35	21.13	3	23.55	20.44	3.39
	63 (17.2)††	29.47	22.83	1.9	28.08	22.21	2.13	26.6	21.55	2.38	25.05	20.87	2.66	23.44	20.16	2.98	21.78	19.43	3.36
	62.0 (16.7)	29.19	28.46	1.9	27.89	27.75	2.13	26.7	26.54	2.38	25.32	25.32	2.66	23.98	23.98	2.99	22.57	22.57	3.38
	57.0 (13.9)	28.86	28.86	1.9	27.74	27.74	2.13	26.55	26.55	2.38	25.28	25.28	2.66	23.95	23.95	2.99	22.54	22.54	3.38
1125	72.0 (22.2)	35.44	19.85	1.96	33.76	19.24	2.2	31.98	18.6	2.46	30.14	17.94	2.75	28.19	17.25	3.08	26.15	16.56	3.47
	67.0 (19.4)	32.24	25.25	1.95	30.71	24.62	2.18	29.09	23.96	2.43	27.39	23.27	2.72	25.63	22.55	3.05	23.81	21.79	3.43
	63 (17.2)††	29.92	24.17	1.94	28.48	23.53	2.17	26.96	22.86	2.42	25.37	22.17	2.7	23.73	21.44	3.03	22.03	20.67	3.41
	62.0 (16.7)	29.99	29.87	1.94	28.7	28.7	2.17	27.44	27.44	2.42	26.1	26.1	2.71	24.7	24.7	3.04	23.21	23.21	3.43
	57.0 (13.9)	29.84	29.84	1.94	28.66	28.66	2.17	27.4	27.4	2.42	26.07	26.07	2.71	24.66	24.66	3.04	23.16	23.16	3.42

Manufacturer reserves the right to change, at any time, specifications and designs without notice and without obligations.

DETAILED COOLING CAPACITIES (Continued)

EVAPORATOR AIR		CONDENSER ENTERING AIR TEMPERATURES °F (°C)																	
CFM	EWB	75.0 (23.9)			85.0 (29.4)			95.0 (35.0)			105.0 (40.6)			115.0 (46.1)			125.0 (51.7)		
		Capacity MBtuh		Total Sys.	Capacity MBtuh		Total Sys.	Capacity MBtuh		Total Sys.	Capacity MBtuh		Total Sys.	Capacity MBtuh		Total Sys.	Capacity MBtuh		Total Sys.
		Total	Sens‡	KW**	Total	Sens‡	KW**	Total	Sens‡	KW**	Total	Sens‡	KW**	Total	Sens‡	KW**	Total	Sens‡	KW**
GH5SAN531A Outdoor Section With FJ5AN*B30L*Indoor Section**																			
830	72.0 (22.2)	34.07	17.62	1.77	32.57	17.04	2.00	30.96	16.43	2.25	29.24	15.78	2.53	27.41	15.10	2.84	25.47	14.39	3.20
	67.0 (19.4)	30.83	21.53	1.77	29.47	20.95	1.99	28.00	20.33	2.24	26.44	19.68	2.51	24.78	19.01	2.82	23.04	18.30	3.18
	63.0 (17.2)††	28.52	20.69	1.76	27.24	20.11	1.99	25.88	19.49	2.23	24.42	18.84	2.50	22.89	18.16	2.81	21.27	17.44	3.16
	62.0 (16.7)	28.04	25.38	1.76	26.81	24.79	1.99	25.50	24.15	2.23	24.12	23.46	2.50	22.69	22.69	2.81	21.34	21.34	3.16
	57.0 (13.9)	26.97	26.97	1.76	26.00	26.00	1.99	24.95	24.95	2.23	23.82	23.82	2.50	22.61	22.61	2.81	21.31	21.31	3.16
1000	72.0 (22.2)	35.03	18.89	1.82	33.44	18.30	2.05	31.72	17.67	2.30	29.93	17.04	2.58	27.99	16.31	2.90	25.82	15.52	3.25
	67.0 (19.4)	31.75	23.59	1.81	30.30	22.99	2.04	28.75	22.35	2.29	27.10	21.68	2.56	25.36	20.99	2.87	23.52	20.23	3.23
	63.0 (17.2)††	29.39	22.61	1.81	28.04	22.01	2.04	26.59	21.37	2.28	25.06	20.69	2.55	23.44	19.99	2.86	21.76	19.27	3.22
	62.0 (16.7)	29.09	28.14	1.81	27.83	27.47	2.04	26.63	26.40	2.28	25.27	25.27	2.55	23.93	23.93	2.86	22.51	22.51	3.22
	57.0 (13.9)	28.71	28.71	1.81	27.64	27.64	2.04	26.48	26.48	2.28	25.23	25.23	2.55	23.90	23.90	2.86	22.47	22.47	3.22
1125	72.0 (22.2)	35.55	19.78	1.86	33.90	19.18	2.09	32.13	18.54	2.34	30.27	17.87	2.62	28.28	17.20	2.93	26.17	16.43	3.29
	67.0 (19.4)	32.24	25.03	1.85	30.75	24.42	2.08	29.14	23.77	2.33	27.45	23.08	2.60	25.67	22.35	2.91	23.79	21.58	3.27
	63.0 (17.2)††	29.86	23.94	1.85	28.47	23.33	2.07	26.98	22.67	2.32	25.40	21.98	2.59	23.75	21.25	2.90	22.02	20.48	3.25
	62.0 (16.7)	29.80	29.80	1.85	28.63	28.63	2.07	27.40	27.40	2.32	26.08	26.08	2.59	24.67	24.67	2.90	23.15	23.15	3.26
	57.0 (13.9)	29.73	29.73	1.85	28.59	28.59	2.07	27.36	27.36	2.32	26.04	26.04	2.59	24.63	24.63	2.90	23.12	23.12	3.26
GH5SAN536A Outdoor Section With FJ5AN*B36L*Indoor Section**																			
1050	72.0 (22.2)	42.54	21.74	2.43	40.63	21.02	2.66	38.54	20.24	2.91	36.29	19.42	3.21	33.89	18.55	3.55	31.34	17.65	3.95
	67.0 (19.4)	38.6	26.83	2.41	36.9	26.13	2.65	35	25.34	2.92	32.95	24.51	3.22	30.77	23.63	3.57	28.49	22.72	3.98
	63 (17.2)††	35.78	25.8	2.4	34.19	25.09	2.64	32.42	24.3	2.91	30.52	23.47	3.22	28.48	22.61	3.58	26.38	21.68	4
	62.0 (16.7)	35.27	31.84	2.4	33.74	31.1	2.64	32.06	30.28	2.91	30.27	29.35	3.22	28.48	28.48	3.58	26.75	26.75	3.98
	57.0 (13.9)	34.19	34.19	2.39	32.96	32.96	2.64	31.58	31.58	2.91	30.07	30.07	3.22	28.44	28.44	3.58	26.71	26.71	3.99
1200	72.0 (22.2)	43.29	22.8	2.48	41.3	22.07	2.71	39.11	21.28	2.96	36.78	20.44	3.25	34.24	19.52	3.59	31.66	18.65	3.99
	67.0 (19.4)	39.32	28.59	2.47	37.55	27.87	2.71	35.57	27.07	2.97	33.44	26.21	3.27	31.19	25.31	3.62	28.84	24.37	4.03
	63 (17.2)††	36.47	27.43	2.45	34.81	26.7	2.7	32.97	25.9	2.97	30.99	25.04	3.27	28.91	24.14	3.63	26.72	23.2	4.05
	62.0 (16.7)	36.12	34.17	2.45	34.56	33.35	2.7	32.98	32.1	2.97	31.23	31.23	3.27	29.49	29.49	3.63	27.63	27.63	4.04
	57.0 (13.9)	35.61	35.61	2.45	34.29	34.29	2.7	32.8	32.8	2.97	31.18	31.18	3.27	29.44	29.44	3.62	27.59	27.59	4.04
1350	72.0 (22.2)	43.84	23.81	2.54	41.78	23.07	2.76	39.53	22.27	3.02	37.12	21.42	3.3	34.56	20.53	3.64	31.85	19.6	4.04
	67.0 (19.4)	39.87	30.27	2.52	38.02	29.52	2.76	36	28.71	3.02	33.81	27.83	3.32	31.49	26.9	3.66	29.11	25.93	4.07
	63 (17.2)††	37	28.98	2.51	35.27	28.23	2.75	33.38	27.41	3.02	31.35	26.54	3.32	29.21	25.49	3.67	27	24.62	4.09
	62.0 (16.7)	36.91	36.91	2.51	35.43	35.43	2.75	33.86	33.86	3.02	32.15	32.15	3.32	30.3	30.3	3.67	28.32	28.32	4.08
	57.0 (13.9)	36.79	36.79	2.51	35.38	35.38	2.75	33.82	33.82	3.02	32.11	32.11	3.32	30.27	30.27	3.67	28.31	28.31	4.08

Manufacturer reserves the right to change, at any time, specifications and designs without notice and without obligations.

DETAILED COOLING CAPACITIES (Continued)

EVAPORATOR AIR		CONDENSER ENTERING AIR TEMPERATURES °F (°C)																	
CFM	EWB	75.0 (23.9)			85.0 (29.4)			95.0 (35.0)			105.0 (40.6)			115.0 (46.1)			125.0 (51.7)		
		Capacity MBtuh		Total Sys. KW**	Capacity MBtuh		Total Sys. KW**	Capacity MBtuh		Total Sys. KW**	Capacity MBtuh		Total Sys. KW**	Capacity MBtuh		Total Sys. KW**	Capacity MBtuh		Total Sys. KW**
		Total	Sens‡		Total	Sens‡		Total	Sens‡		Total	Sens‡		Total	Sens‡		Total	Sens‡	
GH5SAN542A Outdoor Section With FJ5AN*C42L* Indoor Section**																			
1240	72.0 (22.2)	49.41	25.83	2.78	47.34	25.04	3.09	45.14	24.21	3.44	42.71	23.31	3.84	40.15	22.37	4.3	37.39	21.37	4.83
	67.0 (19.4)	44.91	31.96	2.76	43.04	31.17	3.07	41	30.32	3.42	38.8	29.41	3.82	36.47	28.46	4.28	33.98	27.45	4.81
	63 (17.2)††	41.63	30.71	2.74	39.89	29.93	3.05	38	29.08	3.4	35.95	28.17	3.8	33.77	27.21	4.26	31.45	26.19	4.79
	62.0 (16.7)	41.08	37.94	2.74	39.42	37.12	3.05	37.62	36.21	3.4	35.72	35.01	3.8	33.78	33.78	4.26	31.87	31.87	4.79
	57.0 (13.9)	39.95	39.95	2.74	38.6	38.6	3.05	37.11	37.11	3.4	35.49	35.49	3.8	33.72	33.72	4.26	31.82	31.82	4.79
1400	72.0 (22.2)	50.19	26.99	2.83	48.05	26.19	3.14	45.75	25.34	3.49	43.26	24.44	3.89	40.6	23.48	4.35	37.75	22.47	4.88
	67.0 (19.4)	45.66	33.86	2.81	43.72	33.05	3.12	41.61	32.19	3.47	39.35	31.26	3.87	36.94	30.28	4.33	34.38	29.24	4.86
	63 (17.2)††	42.36	32.48	2.79	40.56	31.68	3.1	38.59	30.81	3.45	36.48	29.88	3.85	34.24	28.9	4.31	31.86	27.85	4.84
	62.0 (16.7)	42	40.44	2.79	40.31	39.53	3.1	38.59	38.26	3.45	36.8	36.63	3.85	34.87	34.87	4.32	32.86	32.86	4.85
	57.0 (13.9)	41.45	41.45	2.79	40.01	40.01	3.1	38.42	38.42	3.45	36.69	36.69	3.85	34.83	34.83	4.32	32.81	32.81	4.85
1575	72.0 (22.2)	50.83	28.19	2.88	48.62	27.38	3.19	46.25	26.53	3.54	43.66	25.6	3.94	40.94	24.64	4.4	38.03	23.62	4.93
	67.0 (19.4)	46.3	35.84	2.86	44.29	35.02	3.17	42.12	34.14	3.52	39.8	33.19	3.92	37.33	32.18	4.38	34.72	31.09	4.91
	63 (17.2)††	42.98	34.32	2.85	41.12	33.5	3.16	39.1	32.61	3.51	36.93	31.66	3.91	34.63	30.64	4.37	32.21	29.55	4.9
	62.0 (16.7)	43.03	42.54	2.85	41.35	41.35	3.16	39.66	39.66	3.51	37.83	37.83	3.91	35.84	35.84	4.37	33.7	33.7	4.9
	57.0 (13.9)	42.82	42.82	2.85	41.29	41.29	3.16	39.61	39.61	3.51	37.78	37.78	3.91	35.82	35.82	4.37	33.69	33.69	4.9
GH5SAN548A Outdoor Section With FJ5AN*C48L*Indoor Section**																			
1250	72.0 (22.2)	56.66	28.52	3.15	54.39	27.64	3.52	51.91	26.69	3.95	49.15	25.65	4.43	46.05	24.49	4.98	42.62	23.24	5.61
	67.0 (19.4)	51.3	34.6	3.14	49.27	33.73	3.5	47	32.78	3.92	44.48	31.73	4.4	41.69	30.58	4.94	38.53	29.3	5.57
	63 (17.2)††	47.5	33.32	3.13	45.58	32.44	3.48	43.48	31.48	3.9	41.14	30.44	4.37	38.53	29.28	4.92	35.61	28	5.54
	62.0 (16.7)	46.66	40.62	3.13	44.79	39.73	3.48	42.76	38.76	3.89	40.51	37.68	4.37	38.02	36.46	4.92	35.31	35.31	5.54
	57.0 (13.9)	44.41	44.41	3.12	42.96	42.96	3.47	41.36	41.36	3.88	39.57	39.57	4.36	37.55	37.55	4.91	35.24	35.24	5.54
1600	72.0 (22.2)	58.89	31.23	3.24	56.4	30.32	3.62	53.69	29.33	4.05	50.71	28.26	4.54	47.38	27.07	5.1	43.69	25.78	5.72
	67.0 (19.4)	53.41	38.98	3.23	51.15	38.06	3.6	48.72	37.07	4.02	46	35.96	4.51	43	34.78	5.05	39.66	33.45	5.68
	63 (17.2)††	49.49	37.39	3.23	47.39	36.46	3.58	45.11	35.47	4	42.59	34.38	4.48	39.8	33.17	5.02	36.69	31.84	5.65
	62.0 (16.7)	48.96	46.5	3.23	46.99	45.48	3.58	45.02	43.97	4	42.79	42.79	4.48	40.49	40.49	5.03	37.87	37.87	5.66
	57.0 (13.9)	48.27	48.27	3.22	46.6	46.6	3.58	44.77	44.77	4	42.73	42.73	4.48	40.42	40.42	5.03	37.82	37.82	5.66
1800	72.0 (22.2)	59.74	32.68	3.3	57.16	31.75	3.68	54.36	30.75	4.11	51.26	29.65	4.6	47.81	28.43	5.15	44.06	27.15	5.78
	67.0 (19.4)	54.23	41.34	3.29	51.9	40.4	3.66	49.39	39.39	4.08	46.6	38.27	4.56	43.52	37.04	5.11	40.11	35.66	5.74
	63 (17.2)††	50.27	39.57	3.28	48.12	38.64	3.64	45.77	37.61	4.06	43.18	36.49	4.54	40.3	35.24	5.08	37.13	33.85	5.71
	62.0 (16.7)	50.1	50.1	3.28	48.27	48.27	3.64	46.33	46.33	4.06	44.16	44.16	4.54	41.72	41.72	5.09	38.97	38.97	5.73
	57.0 (13.9)	49.95	49.95	3.28	48.2	48.2	3.64	46.26	46.26	4.06	44.1	44.1	4.54	41.66	41.66	5.1	38.91	38.91	5.73

Manufacturer reserves the right to change, at any time, specifications and designs without notice and without obligations.

DETAILED COOLING CAPACITIES (Continued)

EVAPORATOR AIR		CONDENSER ENTERING AIR TEMPERATURES °F (°C)																	
CFM	EWB	75.0 (23.9)			85.0 (29.4)			95.0 (35.0)			105.0 (40.6)			115.0 (46.1)			125.0 (51.7)		
		Capacity MBtuh		Total Sys. KW**	Capacity MBtuh		Total Sys. KW**	Capacity MBtuh		Total Sys. KW**	Capacity MBtuh		Total Sys. KW**	Capacity MBtuh		Total Sys. KW**	Capacity MBtuh		Total Sys. KW**
		Total	Sens‡		Total	Sens‡		Total	Sens‡		Total	Sens‡		Total	Sens‡		Total	Sens‡	
GH5SAN560**A Outdoor Section With FJ5AN*D60L*Indoor Section																			
1775	72.0 (22.2)	69.13	35.84	4.07	66.01	34.69	4.53	62.68	33.48	5.05	58.98	32.15	5.64	55.14	30.78	6.31	50.84	29.3	7.06
	67.0 (19.4)	63.31	44.81	4.03	60.51	43.67	4.49	57.5	42.45	5	54.24	41.14	5.59	50.69	39.73	6.25	46.83	38.21	7.01
	63 (17.2)††	58.99	43.17	4.01	56.42	42.04	4.46	53.64	40.83	4.97	50.62	39.52	5.55	47.35	38.12	6.22	43.77	36.6	6.98
	62.0 (16.7)	58.15	53.51	4.01	55.69	52.32	4.45	53.05	51.01	4.96	50.43	49.01	5.55	47.56	47.56	6.22	44.54	44.54	6.98
	57.0 (13.9)	56.88	56.88	4	54.86	54.86	4.45	52.64	52.64	4.96	50.19	50.19	5.55	47.49	47.49	6.22	44.48	44.48	6.98
2000	72.0 (22.2)	70.03	37.44	4.15	66.79	36.27	4.61	63.34	35.04	5.13	59.6	33.72	5.72	55.57	32.31	6.39	51.18	30.8	7.14
	67.0 (19.4)	64.23	47.48	4.11	61.33	46.31	4.56	58.21	45.07	5.08	54.83	43.73	5.67	51.19	42.3	6.33	47.24	40.74	7.09
	63 (17.2)††	59.92	45.66	4.09	57.25	44.5	4.54	54.37	43.27	5.05	51.26	41.94	5.63	47.89	40.5	6.3	44.22	38.93	7.05
	62.0 (16.7)	59.36	57.03	4.09	56.89	56.89	4.53	54.43	54.43	5.05	51.79	51.79	5.64	48.93	48.93	6.31	45.73	45.73	7.07
	57.0 (13.9)	58.9	58.9	4.08	56.73	56.73	4.53	54.36	54.36	5.05	51.75	51.75	5.64	48.87	48.87	6.31	45.68	45.68	7.07
2250	72.0 (22.2)	70.76	39.14	4.23	67.42	37.96	4.7	63.84	36.71	5.22	60	35.37	5.81	55.87	33.96	6.48	51.32	32.43	7.23
	67.0 (19.4)	64.99	50.33	4.2	62	49.14	4.65	58.79	47.87	5.17	55.33	46.5	5.76	51.6	45.01	6.42	47.57	43.38	7.18
	63 (17.2)††	60.7	48.31	4.17	57.95	47.13	4.62	54.98	45.86	5.13	51.79	44.49	5.72	48.34	43.01	6.38	44.62	41.36	7.14
	62.0 (16.7)	61.03	59.18	4.18	58.5	58.5	4.63	55.97	55.97	5.14	53.2	53.2	5.73	50.14	50.14	6.4	46.76	46.76	7.17
	57.0 (13.9)	60.74	60.74	4.17	58.42	58.42	4.62	55.9	55.9	5.14	53.14	53.14	5.73	50.13	50.13	6.41	46.71	46.71	7.17

Detailed cooling capacities are based on indoor and outdoor unit at the same elevation per AHRI standard 210/240-2020. If additional tubing length and/or indoor unit is located above outdoor unit, a slight variation in capacity may occur.

‡Sensible capacities shown are based on 80°F (27°C) entering air at the indoor coil. For sensible capacities at other than 80°F (27°C), deduct 835 Btuh (245 kW) per 1000 CFM (480 L/S) of indoor coil air for each degree below 80°F (27°C), or add 835 Btuh (245 kW) per 1000 CFM (480 L/S) of indoor coil air per degree above 80°F (27°C).

**Total System. kw is total of indoor and outdoor unit kilowatts.

††At TVA rating indoor condition (75°F edb/63°F ewb). All other indoor air temperatures are at 80°F edb.

NOTE: When the required data falls between the published data, interpolation may be performed. Extrapolation is not an acceptable practice.

EWB — Entering Wet Bulb1

Manufacturer reserves the right to change, at any time, specifications and designs without notice and without obligations.

HEAT PUMP HEATING PERFORMANCE

INDOOR AIR		OUTDOOR COIL ENTERING AIR TEMPERATURES °F (°C)																							
		-3.0 (-19.4)			7.0 (-13.9)			17.0 (-8.3)			27.0 (-2.8)			37.0 (2.8)			47.0 (8.3)			57.0 (13.9)			67.0 (19.4)		
EDB	CFM	Capacity MBtuh		Total Sys. KW†	Capacity MBtuh		Total Sys. kW†	Capacity MBtuh		Total Sys. kW†	Capacity MBtuh		Total Sys. kW†	Capacity MBtuh		Total Sys. kW†	Capacity MBtuh		Total Sys. kW†	Capacity MBtuh		Total Sys. kW†	Capacity MBtuh		Total Sys. kW†
		Total	Integ*		Total	Integ*		Total	Integ*		Total	Integ*		Total	Integ*		Total	Integ*		Total	Integ*		Total	Integ*	
GH5SAN518A Outdoor Section With FJ5AN*A18L* Indoor Section**																									
65 (18.3)	540	6.11	5.62	1.09	7.97	7.33	1.13	10.10	9.21	1.18	11.85	10.52	1.22	15.23	13.86	1.28	17.74	17.74	1.33	20.52	20.52	1.39	23.29	23.29	1.42
	600	6.18	5.69	1.09	8.07	7.42	1.13	10.22	9.32	1.17	12.63	11.22	1.22	15.36	13.97	1.27	17.92	17.92	1.31	20.75	20.75	1.36	23.46	23.46	1.39
	675	6.28	5.78	1.10	8.18	7.52	1.14	10.34	9.43	1.18	12.78	11.35	1.22	15.50	14.10	1.26	18.09	18.09	1.30	20.87	20.87	1.33	23.61	23.61	1.37
70.0 (21.1)	540	5.80	5.34	1.13	7.69	7.06	1.18	9.81	8.95	1.23	12.17	10.81	1.28	15.02	13.66	1.34	17.50	17.50	1.40	20.21	20.21	1.45	23.00	23.00	1.49
	600	5.89	5.42	1.14	7.79	7.16	1.18	9.93	9.06	1.23	12.33	10.95	1.27	15.15	13.79	1.33	17.67	17.67	1.37	20.44	20.44	1.43	23.18	23.18	1.46
	675	5.98	5.50	1.15	7.90	7.26	1.19	10.06	9.18	1.23	12.47	11.07	1.27	15.29	13.92	1.32	17.84	17.84	1.36	20.64	20.64	1.40	23.33	23.33	1.43
75 (23.9)	540	5.49	5.05	1.17	7.42	6.82	1.23	9.51	8.67	1.28	11.90	10.57	1.34	14.77	13.44	1.40	17.25	17.25	1.46	19.92	19.92	1.52	22.69	22.69	1.57
	600	5.57	5.13	1.18	7.48	6.88	1.23	9.63	8.78	1.28	12.01	10.67	1.33	14.92	13.58	1.39	17.42	17.42	1.44	20.13	20.13	1.49	22.88	22.88	1.53
	675	5.67	5.21	1.19	7.59	6.98	1.23	9.76	8.90	1.28	12.17	10.81	1.33	15.07	13.72	1.38	17.59	17.59	1.42	20.35	20.35	1.47	23.04	23.04	1.50
GH5SAN519A Outdoor Section With FJ5AN*A18L*Indoor Section**																									
65 (18.3)	525	6.61	6.08	1.15	8.60	7.90	1.20	10.88	9.92	1.25	13.67	12.14	1.31	16.19	14.73	1.37	19.02	19.02	1.43	22.15	22.15	1.50	25.58	25.58	1.58
	605	6.74	6.20	1.16	8.75	8.04	1.21	10.97	10.01	1.25	13.81	12.27	1.30	16.40	14.93	1.35	19.30	19.30	1.40	22.51	22.51	1.46	26.05	26.05	1.54
	675	6.84	6.29	1.18	8.86	8.14	1.21	11.19	10.20	1.26	13.92	12.36	1.30	16.56	15.07	1.34	19.50	19.50	1.39	22.77	22.77	1.44	26.37	26.37	1.51
70.0 (21.1)	525	6.32	5.81	1.20	8.31	7.64	1.25	10.59	9.65	1.31	13.44	11.94	1.37	15.95	14.52	1.43	18.72	18.72	1.49	21.79	21.79	1.57	25.16	25.16	1.65
	605	6.45	5.93	1.21	8.46	7.78	1.26	10.70	9.76	1.30	13.62	12.10	1.36	16.16	14.71	1.41	19.00	19.00	1.47	22.15	22.15	1.53	25.62	25.62	1.60
	675	6.54	6.02	1.22	8.57	7.88	1.26	10.89	9.93	1.31	13.75	12.21	1.36	16.31	14.85	1.40	19.20	19.20	1.45	22.40	22.40	1.51	25.93	25.93	1.58
75 (23.9)	525	6.01	5.53	1.24	8.01	7.36	1.30	10.28	9.37	1.36	12.83	11.40	1.43	15.71	14.30	1.50	18.43	18.43	1.56	21.44	21.44	1.64	24.74	24.74	1.72
	605	6.13	5.64	1.26	8.16	7.50	1.31	10.46	9.53	1.36	13.05	11.59	1.42	15.92	14.49	1.48	18.70	18.70	1.53	21.79	21.79	1.60	25.19	25.19	1.68
	675	6.23	5.73	1.27	8.27	7.60	1.31	10.59	9.65	1.36	13.52	12.00	1.42	16.07	14.62	1.47	18.89	18.89	1.52	22.04	22.04	1.58	25.50	25.50	1.65
GH5SAN524A Outdoor Section With FJ5AN*B24L* Indoor Section**																									
65 (18.3)	665	8.52	7.84	1.43	10.71	9.84	1.47	13.36	12.18	1.52	16.70	14.83	1.60	19.74	17.96	1.67	23.10	23.10	1.75	26.61	26.61	1.83	29.51	29.51	1.89
	800	8.76	8.06	1.45	10.98	10.09	1.47	13.67	12.46	1.52	16.99	15.09	1.58	20.06	18.25	1.63	23.51	23.51	1.70	26.78	26.78	1.75	29.62	29.62	1.81
	900	8.92	8.20	1.46	11.15	10.25	1.49	13.86	12.64	1.52	17.14	15.23	1.58	20.26	18.43	1.62	23.75	23.75	1.68	26.81	26.81	1.72	29.62	29.62	1.77
70.0 (21.1)	665	8.08	7.44	1.48	10.31	9.47	1.52	12.98	11.84	1.58	16.43	14.59	1.68	19.48	17.73	1.75	22.80	22.80	1.83	26.34	26.34	1.92	29.24	29.24	1.99
	800	8.31	7.64	1.50	10.57	9.71	1.53	13.28	12.11	1.58	16.72	14.85	1.66	19.79	18.01	1.71	23.19	23.19	1.78	26.55	26.55	1.84	29.37	29.37	1.90
	900	8.46	7.78	1.51	10.73	9.86	1.54	13.47	12.28	1.59	16.89	15.00	1.65	19.98	18.18	1.70	23.43	23.43	1.77	26.61	26.61	1.81	29.39	29.39	1.86
75 (23.9)	665	7.60	6.99	1.53	9.90	9.10	1.58	12.61	11.49	1.65	15.71	13.96	1.74	19.24	17.50	1.84	22.50	22.50	1.93	26.06	26.06	2.02	28.96	28.96	2.08
	800	7.85	7.23	1.55	10.15	9.33	1.59	12.90	11.76	1.65	16.12	14.32	1.72	19.54	17.78	1.80	22.89	22.89	1.87	26.31	26.31	1.94	29.10	29.10	1.99
	900	8.00	7.36	1.57	10.31	9.47	1.61	13.07	11.92	1.66	16.44	14.60	1.72	19.71	17.94	1.79	23.12	23.12	1.85	26.39	26.39	1.91	29.13	29.13	1.95
GH5SAN530A Outdoor Section With FJ5AN*B30L*Indoor Section**																									
65 (18.3)	915	10.87	10.00	1.69	13.99	12.85	1.74	17.36	15.83	1.79	21.52	19.12	1.88	25.19	22.92	1.94	29.23	29.23	2.02	33.77	33.77	2.13	38.80	38.80	2.24
	1000	10.98	10.10	1.71	14.14	13.00	1.75	17.54	15.99	1.80	21.71	19.28	1.87	25.39	23.10	1.93	29.49	29.49	2.00	34.10	34.10	2.10	38.98	38.98	2.19
	1125	11.18	10.28	1.73	14.34	13.18	1.76	17.77	16.21	1.81	21.93	19.48	1.87	25.64	23.33	1.92	29.79	29.79	1.99	34.50	34.50	2.08	39.10	39.10	2.15
70.0 (21.1)	915	10.35	9.52	1.76	13.50	12.41	1.81	16.87	15.38	1.87	20.58	18.28	1.94	24.82	22.58	2.03	28.80	28.80	2.12	33.26	33.26	2.23	38.28	38.28	2.35
	1000	10.52	9.68	1.77	13.66	12.55	1.82	17.05	15.55	1.87	20.82	18.50	1.94	25.02	22.76	2.02	29.05	29.05	2.10	33.58	33.58	2.20	38.50	38.50	2.30
	1125	10.69	9.84	1.79	13.86	12.74	1.84	17.29	15.76	1.88	21.16	18.79	1.95	25.27	22.99	2.02	29.36	29.36	2.09	33.96	33.96	2.18	38.66	38.66	2.26
75 (23.9)	915	9.84	9.05	1.83	13.00	11.95	1.88	16.36	14.91	1.95	20.04	17.80	2.03	24.45	22.25	2.13	28.37	28.37	2.22	32.79	32.79	2.34	37.75	37.75	2.47
	1000	9.96	9.17	1.84	13.16	12.09	1.90	16.54	15.08	1.95	20.26	18.00	2.02	24.65	22.43	2.12	28.61	28.61	2.20	33.08	33.08	2.31	38.00	38.00	2.42
	1125	10.17	9.36	1.86	13.35	12.27	1.91	16.78	15.30	1.96	20.54	18.24	2.03	24.89	22.65	2.11	28.92	28.92	2.19	33.44	33.44	2.28	38.19	38.19	2.37

Manufacturer reserves the right to change, at any time, specifications and designs without notice and without obligations.

HEAT PUMP HEATING PERFORMANCE (Continued)

INDOOR AIR		OUTDOOR COIL ENTERING AIR TEMPERATURES °F (°C)																							
		-3.0 (-19.4)			7.0 (-13.9)			17.0 (-8.3)			27.0 (-2.8)			37.0 (2.8)			47.0 (8.3)			57.0 (13.9)			67.0 (19.4)		
EDB	CFM	Capacity MBtuh		Total Sys. KW†	Capacity MBtuh		Total Sys. kW†	Capacity MBtuh		Total Sys. kW†	Capacity MBtuh		Total Sys. kW†	Capacity MBtuh		Total Sys. kW†	Capacity MBtuh		Total Sys. kW†	Capacity MBtuh		Total Sys. kW†	Capacity MBtuh		Total Sys. kW†
		Total	Integ*		Total	Integ*		Total	Integ*		Total	Integ*		Total	Integ*		Total	Integ*		Total	Integ*		Total	Integ*	
GH5SAN531A Outdoor Section With FJ5AN*B30L*Indoor Section**																									
65 (18.3)	830	11.83	10.88	1.77	14.92	13.71	1.82	18.40	16.78	1.90	21.78	19.35	1.97	25.66	23.35	2.06	30.09	30.09	2.18	35.12	35.12	2.35	40.36	40.36	2.51
	1000	12.10	11.13	1.79	15.25	14.02	1.84	18.71	17.05	1.89	22.16	19.69	1.95	26.14	23.79	2.03	30.68	30.68	2.14	35.71	35.71	2.27	40.70	40.70	2.42
	1125	12.27	11.29	1.81	15.50	14.24	1.85	18.89	17.22	1.90	22.39	19.88	1.95	26.41	24.03	2.03	31.00	31.00	2.13	35.85	35.85	2.25	40.60	40.60	2.40
70.0 (21.1)	830	11.44	10.52	1.84	14.50	13.33	1.90	18.12	16.52	1.99	21.40	19.01	2.06	25.25	22.97	2.15	29.60	29.60	2.28	34.56	34.56	2.46	39.86	39.86	2.63
	1000	11.71	10.78	1.86	14.83	13.63	1.91	18.42	16.79	1.98	21.81	19.37	2.04	25.72	23.40	2.12	30.18	30.18	2.24	35.23	35.23	2.39	40.24	40.24	2.53
	1125	11.88	10.93	1.88	15.03	13.81	1.93	18.60	16.96	1.99	22.01	19.55	2.04	25.99	23.65	2.12	30.50	30.50	2.23	35.44	35.44	2.35	40.34	40.34	2.51
75 (23.9)	830	11.02	10.14	1.91	14.07	12.93	1.98	17.80	16.23	2.07	21.06	18.70	2.15	24.84	22.60	2.26	29.12	29.12	2.39	34.01	34.01	2.57	39.37	39.37	2.76
	1000	11.30	10.39	1.93	14.40	13.23	1.99	18.13	16.53	2.07	21.43	19.03	2.14	25.30	23.02	2.22	29.69	29.69	2.34	34.69	34.69	2.50	39.78	39.78	2.66
	1125	11.47	10.55	1.96	14.60	13.41	2.01	18.31	16.70	2.08	21.69	19.26	2.14	25.56	23.26	2.22	30.00	30.00	2.33	34.97	34.97	2.47	39.89	39.89	2.63
GH5SAN536 Outdoor Section With FJ5AN*B36L*Indoor Section**																									
65 (18.3)	1050	14.05	12.93	2.17	17.66	16.22	2.23	22.24	20.28	2.33	26.39	23.44	2.42	31.03	28.24	2.53	36.16	36.16	2.66	41.82	41.82	2.80	47.97	47.97	2.92
	1200	14.30	13.15	2.20	17.93	16.48	2.25	22.51	20.53	2.33	26.69	23.71	2.42	31.41	28.58	2.51	36.64	36.64	2.63	42.46	42.46	2.77	48.35	48.35	2.87
	1350	14.52	13.36	2.23	18.18	16.70	2.27	22.75	20.74	2.35	26.96	23.94	2.42	31.73	28.88	2.51	37.05	37.05	2.62	42.96	42.96	2.75	48.53	48.53	2.84
70.0 (21.1)	1050	13.52	12.43	2.25	17.15	15.76	2.31	21.36	19.48	2.41	26.02	23.11	2.53	30.57	27.82	2.64	35.60	35.60	2.78	41.11	41.11	2.92	47.23	47.23	3.05
	1200	13.77	12.67	2.27	17.43	16.02	2.33	21.80	19.88	2.42	26.32	23.38	2.52	30.95	28.16	2.63	36.08	36.08	2.75	41.73	41.73	2.88	47.70	47.70	2.99
	1350	13.99	12.87	2.31	17.68	16.25	2.36	22.39	20.41	2.45	26.59	23.61	2.53	31.27	28.46	2.63	36.48	36.48	2.74	42.24	42.24	2.87	47.92	47.92	2.96
75 (23.9)	1050	12.93	11.90	2.32	16.60	15.25	2.40	20.77	18.94	2.51	25.64	22.77	2.65	30.11	27.40	2.77	35.04	35.04	2.90	40.45	40.45	3.04	46.44	46.44	3.19
	1200	13.18	12.13	2.35	16.88	15.51	2.42	21.11	19.24	2.51	25.94	23.04	2.64	30.48	27.74	2.75	35.51	35.51	2.87	41.03	41.03	3.00	47.01	47.01	3.11
	1350	13.41	12.34	2.38	17.13	15.75	2.45	21.40	19.51	2.53	26.20	23.27	2.64	30.80	28.03	2.74	35.90	35.90	2.85	41.51	41.51	2.99	47.29	47.29	3.08
GH5SAN542 Outdoor Section With FJ5AN*C42L*Indoor Section**																									
65 (18.3)	1240	14.60	13.44	2.39	18.83	17.31	2.49	23.59	21.50	2.60	28.72	25.51	2.71	34.41	31.32	2.85	40.01	40.01	2.97	46.57	46.57	3.12	54.10	54.10	3.31
	1400	14.83	13.64	2.41	19.08	17.53	2.50	23.85	21.75	2.60	29.10	25.85	2.70	34.74	31.61	2.82	40.44	40.44	2.92	47.13	47.13	3.07	54.64	54.64	3.22
	1575	15.05	13.85	2.43	19.32	17.76	2.52	24.11	21.98	2.61	29.42	26.13	2.71	35.06	31.90	2.81	40.84	40.84	2.90	47.64	47.64	3.03	55.05	55.05	3.16
70.0 (21.1)	1240	14.00	12.88	2.50	18.26	16.78	2.61	23.04	21.01	2.73	28.15	25.00	2.85	34.01	30.95	2.99	39.50	39.50	3.11	45.93	45.93	3.27	53.38	53.38	3.48
	1400	14.23	13.09	2.52	18.51	17.01	2.62	23.32	21.27	2.73	28.48	25.30	2.83	34.33	31.24	2.96	39.92	39.92	3.07	46.47	46.47	3.21	53.95	53.95	3.38
	1575	14.46	13.30	2.55	18.77	17.24	2.64	23.59	21.51	2.74	28.80	25.58	2.83	34.64	31.52	2.95	40.31	40.31	3.05	46.98	46.98	3.18	54.41	54.41	3.31
75 (23.9)	1240	13.37	12.30	2.63	17.68	16.24	2.74	22.39	20.41	2.86	27.57	24.49	2.98	33.60	30.58	3.14	38.99	38.99	3.27	45.29	45.29	3.43	52.62	52.62	3.64
	1400	13.60	12.51	2.65	17.94	16.49	2.75	22.67	20.67	2.86	27.90	24.78	2.97	33.93	30.87	3.12	39.39	39.39	3.22	45.82	45.82	3.37	53.25	53.25	3.55
	1575	13.83	12.72	2.68	18.19	16.71	2.77	22.97	20.94	2.87	28.20	25.04	2.97	34.22	31.14	3.10	39.78	39.78	3.20	46.32	46.32	3.33	53.74	53.74	3.48
GH5SAN548 Outdoor Section With FJ5AN*C48L*Indoor Section**																									
65 (18.3)	1250	17.68	16.27	2.83	22.95	21.09	2.96	28.59	26.07	3.10	34.91	31.00	3.25	41.53	37.79	3.41	48.12	48.12	3.57	55.75	55.75	3.77	64.50	64.50	4.04
	1600	18.33	16.86	2.86	23.68	21.76	2.97	29.41	26.82	3.08	36.30	32.24	3.22	42.36	38.55	3.32	49.20	49.20	3.44	57.22	57.22	3.60	66.50	66.50	3.81
	1800	18.63	17.14	2.89	24.01	22.06	3.00	29.78	27.16	3.09	36.61	32.52	3.22	42.73	38.88	3.31	49.67	49.67	3.41	57.82	57.82	3.55	67.24	67.24	3.73
70.0 (21.1)	1250	16.72	15.38	2.95	22.16	20.36	3.09	27.86	25.40	3.24	34.08	30.27	3.39	41.05	37.36	3.58	47.50	47.50	3.74	54.97	54.97	3.95	63.50	63.50	4.23
	1600	17.42	16.02	2.98	22.81	20.96	3.10	28.65	26.12	3.22	34.98	31.06	3.34	41.85	38.08	3.48	48.56	48.56	3.60	56.41	56.41	3.77	65.49	65.49	3.99
	1800	17.61	16.20	3.01	23.19	21.31	3.12	29.01	26.45	3.23	35.48	31.51	3.34	42.22	38.42	3.46	49.02	49.02	3.57	57.01	57.01	3.72	66.28	66.28	3.92
75 (23.9)	1250	15.90	14.63	3.08	21.27	19.55	3.24	27.07	24.68	3.38	33.36	29.63	3.55	40.57	36.92	3.76	46.89	46.89	3.93	54.17	54.17	4.15	62.50	62.50	4.43
	1600	16.50	15.18	3.12	22.04	20.25	3.24	27.89	25.43	3.36	34.21	30.38	3.49	41.36	37.63	3.65	47.93	47.93	3.78	55.60	55.60	3.95	64.47	64.47	4.18
	1800	16.78	15.43	3.14	22.36	20.54	3.26	28.23	25.74	3.37	34.58	30.71	3.48	41.70	37.95	3.63	48.38	48.38	3.75	56.20	56.20	3.90	65.25	65.25	4.11

Manufacturer reserves the right to change, at any time, specifications and designs without notice and without obligations.

HEAT PUMP HEATING PERFORMANCE (Continued)

INDOOR AIR		OUTDOOR COIL ENTERING AIR TEMPERATURES °F (°C)																							
		-3.0 (-19.4)			7.0 (-13.9)			17.0 (-8.3)			27.0 (-2.8)			37.0 (2.8)			47.0 (8.3)			57.0 (13.9)			67.0 (19.4)		
EDB	CFM	Capacity MBtuh		Total Sys. KW†	Capacity MBtuh		Total Sys. kW†	Capacity MBtuh		Total Sys. kW†	Capacity MBtuh		Total Sys. kW†	Capacity MBtuh		Total Sys. kW†	Capacity MBtuh		Total Sys. kW†	Capacity MBtuh		Total Sys. kW†	Capacity MBtuh		Total Sys. kW†
		Total	Integ*		Total	Integ*		Total	Integ*		Total	Integ*		Total	Integ*		Total	Integ*		Total	Integ*		Total	Integ*	
GH5SAN560** Outdoor Section With FJ5AN*D60L*Indoor Section																									
65 (18.3)	1775	20.98	19.30	3.48	26.81	24.64	3.60	33.31	30.37	3.73	41.27	36.66	3.89	48.26	43.92	4.00	56.18	56.18	4.15	64.59	64.59	4.28	72.80	72.80	4.46
	2000	21.30	19.60	3.52	27.17	24.97	3.63	33.72	30.74	3.75	41.61	36.96	3.89	48.71	44.32	3.98	56.76	56.76	4.11	64.90	64.90	4.21	72.96	72.96	4.37
	2250	21.63	19.90	3.57	27.52	25.29	3.67	34.11	31.10	3.77	41.97	37.28	3.90	49.14	44.71	3.99	57.21	57.21	4.09	65.10	65.10	4.18	72.93	72.93	4.31
70.0 (21.1)	1775	20.21	18.59	3.63	26.08	23.97	3.76	32.57	29.70	3.89	40.05	35.57	4.04	47.74	43.44	4.20	55.50	55.50	4.35	63.90	63.90	4.49	72.01	72.01	4.68
	2000	20.54	18.90	3.67	26.45	24.31	3.79	33.00	30.08	3.90	41.18	36.57	4.07	48.17	43.84	4.17	56.07	56.07	4.31	64.24	64.24	4.42	72.23	72.23	4.58
	2250	20.87	19.20	3.72	26.81	24.64	3.83	33.40	30.46	3.94	41.55	36.90	4.08	48.60	44.22	4.17	56.57	56.57	4.28	64.47	64.47	4.38	72.26	72.26	4.52
75 (23.9)	1775	19.35	17.80	3.79	25.28	23.23	3.93	31.80	29.00	4.07	39.05	34.68	4.22	47.24	42.99	4.41	54.82	54.82	4.56	63.20	63.20	4.71	71.22	71.22	4.91
	2000	19.69	18.11	3.83	25.66	23.58	3.96	32.23	29.39	4.08	39.56	35.13	4.22	47.65	43.36	4.37	55.38	55.38	4.51	63.56	63.56	4.63	71.47	71.47	4.80
	2250	20.02	18.42	3.88	26.03	23.92	3.99	32.64	29.76	4.11	40.09	35.61	4.24	48.06	43.74	4.37	55.91	55.91	4.49	63.81	63.81	4.59	71.54	71.54	4.74

NOTE: When the required data falls between the published data, interpolation may be performed. Extrapolation is not an acceptable practice.

* The Btuh heating capacity values shown are net integrated values from which the defrost effect has been subtracted. The Btuh heating from supplement heaters should be added to those values to obtain total Sys. capacity.

† The kW values include the compressor, outdoor fan motor, and indoor blower motor. The kW from supplement heaters should be added to these values to obtain total Sys. kilowatts.

EDB — Entering Dry Bulb2

Manufacturer reserves the right to change, at any time, specifications and designs without notice and without obligations.

Guide Specifications
General

Air-Cooled, Split-System Heat Pump
GH5SAN5
1.5 to 5 nominal tons

System Description

Outdoor-mounted, air-cooled, split-system heat pump unit suitable for ground or rooftop installation. Unit consists of a hermetic compressor, an air-cooled coil, propeller-type condenser fan, and a control box. Unit will discharge supply air upward as shown on contract drawings. Unit will be used in a refrigeration circuit to match up to a packaged fan coil or coil unit.

Quality Assurance

- Unit will be rated in accordance with the latest edition of AHRI Standard 210/240.
- Unit will be certified for capacity and efficiency, and listed in the latest AHRI directory.
- Unit construction will comply with latest edition of ANSI/ ASHRAE and with NEC.
- Unit will be constructed in accordance with UL standards and will carry the UL label of approval. Unit will have C-UL approval.
- Unit cabinet will be capable of withstanding Federal Test Method Standard No. 141 (Method 6061) 500-hr salt spray test.
- Air-cooled condenser coils are pressure tested and the outdoor unit is leak tested.
- Unit constructed in ISO9001 approved facility.

Delivery, Storage, and Handling

Unit will be shipped as single package only and is stored and handled per unit manufacturer's recommendations.

Warranty (for inclusion by specifying engineer)

U.S. and Canada only.

PRODUCTS

Equipment

Factory assembled, single piece, air-cooled heat pump unit. Contained within the unit enclosure is all factory wiring, piping, controls, compressor, refrigerant charge Puron Advance™, and special features required prior to field start-up.

Unit Cabinet

Unit cabinet will be constructed of galvanized steel and coated with pre-paint.

Available with dense grill only.

Fans

Condenser fan will be direct-drive propeller type, discharging air upward.

Condenser fan motors will be totally enclosed, 1-phase type with class B or class F insulation and permanently lubricated bearings.

Shafts will be corrosion resistant.

Fan blades will be statically and dynamically balanced.

Condenser fan openings will be equipped with steel wire safety guards.

Compressor

Compressor will be hermetically sealed.

Compressor will be mounted on rubber vibration isolators.

Condenser Coil

Condenser coil will be air cooled.

Coil will be constructed of aluminum fins mechanically bonded to copper or aluminum tubes which are then cleaned, dehydrated, and sealed.

Refrigeration Components

Refrigeration circuit components will include liquid-line shutoff valve with sweat connections, vapor-line shutoff valve with sweat connections, system charge of Puron Advance™ refrigerant, POE compressor oil, accumulator, reversing valve and solenoid valve (19 size only).

Operating Characteristics

The capacity of the unit will meet or exceed _____ Btuh at a suction temperature of _____ °F/°C. The power consumption at full load will not exceed _____ kW.

Combination of the unit and the evaporator or fan coil unit will have a total net cooling capacity of _____ Btuh or greater at conditions of _____ CFM entering air temperature at the evaporator at _____ °F wet bulb and _____ °F/°C dry bulb, and air entering the unit at _____ °F/°C.

The system will have a SEER of _____ Btuh/watt or greater at DOE conditions.

Electrical Requirements

Nominal unit electrical characteristics will be _____ v, _____ phase, 60 Hz. The unit will be capable of satisfactory operation within voltage limits of _____ v to _____ v.

Unit electrical power will be single point connection.

Control circuit will be 24v.

Special Features

Refer to section of this literature identifying accessories and descriptions for specific features and available enhancements.

Manufacturer reserves the right to change, at any time, specifications and designs without notice and without obligations.

System Design Summary

1. Intended for outdoor installation with free air inlet and outlet. Outdoor fan external static pressure available is less than 0.01-in. wc.
2. Minimum outdoor operating air temperature without low-ambient operation accessory is 55°F (12.8°C).
3. Maximum outdoor operating air temperature for cooling mode is 125°F (51.7°C).
4. Minimum outdoor operating air temperature for heating mode is –10°F (–23.3°C).
5. Maximum outdoor operating air temperature for heating mode is 66°F (18.9°C).
6. For reliable operation, unit should be level in all horizontal planes.
7. For interconnecting refrigerant tube lengths greater than 80 ft (23.4 m) and/or elevation differences between indoor and outdoor units greater than 20 ft (6.1 m), consult Residential Piping and Longline Guideline and Service Manual available from equipment distributor.
8. If any refrigerant tubing is buried, provide a 6 in. (152.4 mm) vertical rise to the valve connections at the unit. Refrigerant tubing lengths up to 36 in. (914.4 mm) may be buried without further consideration. Do not bury refrigerant lines longer than 36 in. (914.4 mm).
9. Use only copper wire for electric connection at unit. Aluminum and clad aluminum are not acceptable for the type of connector provided.
10. Do not apply capillary tube indoor coils to these units.
11. Factory-supplied filter drier must be installed
12. Factory-supplied liquid line solenoid valve must be installed on 19 size HP.

© 2025 Carrier. All rights reserved.
Edition Date: 09/25

Catalog No: PDSGH5SAN5-04

Replaces: **PDSGH5SAN5-03**

Manufacturer reserves the right to change, at any time, specifications and designs without notice and without obligations.