Accessory Electric Heater and Single Point Box
Small Rooftop Units
Electric Cooling
Select 7.5 to 12.5 Tons

Installation Instructions

Part No. CRHEATER411A00, CRHEATER412A00, CRHEATER414A00-CRHEATER417A00, CRHEATER420A00-CRHEATER425A00,CRHEATER427A00, CRHEATER428A00
CRSINGLE 042A00-045A00, 047A00, 049A00-051A00

CONTENTS

Page

SAFETY CONSIDERATIONS 1
PACKAGE USAGE 2
Carrier Models 2
Bryant Models 2
ICP Models 2
PACKAGE CONTENTS 2
Electric Heaters 2
- CRHEATER411A00, 412A00, 414A00-17A00, 420A00-425A00, 427A00, 428A00

Single Point Boxes 2
- CRSINGLE 042A00-045A00, 047A00, 049A00-051A00

Single Point Boxes (cont) 3
GENERAL 3
Puron® Units 3
Electric Heaters 3
Single Point Boxes and Fuses 3
- NO FUSES
- UNITS WITH FACTORY-INSTALLED HACR
- SINGLE POINT BOX CONTENTS

Control Wiring 3
GENERAL INSTALLATION SEQUENCE 6
INSTALLATION INSTRUCTIONS 6
Installing Single Point Box 6
- SINGLE POINT BOXES WITH ONE SET OF TAP CONDUCTORS
- SINGLE POINT BOXES WITH TWO OR THREE TAP CONDUCTORS

Installing Electric Heater 8
UNIT POWER SUPPLY WIRING – ALL UNITS 9
New Unit Without Factory-Installed Non-Fused Disconnect or HACR 9
- INSTALLATION -SINGLE POINT BOX (ALL UNITS)

New Unit With Factory Disconnect 9
Existing Unit 9
Complete Unit Installation 10

APPENDIX A —AC-1 COOLING APPLICATIONS. . . 11
APPENDIX B — ELECTRICAL HEATER DATA 14

IMPORTANT: Read these instructions completely before attempting to install this accessory.

SAFETY CONSIDERATIONS

Installation of this accessory can be hazardous due to system pressures, electrical components, and equipment location (such as a roof or elevated structure). Only trained, qualified installers and service technicians should install, start-up, and service this equipment.

When installing this accessory, observe precautions in the literature, labels attached to the equipment, and any other safety precautions that apply:

- Follow all safety codes
- Wear safety glasses and work gloves
- Use care in handling and installing this accessory

It is important to recognize safety information. This is the safety-alert symbol: ⚠. When you see this symbol on the unit and in instructions or manuals, be alert to the potential for personal injury.

Understand the signal words DANGER, WARNING, CAUTION, and NOTE. These words are used with the safety-alert symbol. DANGER identifies the most serious hazards which **will** result in severe personal injury or death. WARNING signifies hazards which **could** result in personal injury or death. CAUTION is used to identify unsafe practices, which **may** result in minor personal injury or product and property damage. NOTE is used to highlight suggestions which **will** result in enhanced installation, reliability, or operation.

⚠DANGER

ELECTRICAL SHOCK HAZARD

Failure to follow this warning will result in personal injury or death.

Before performing service or maintenance operations on unit, turn off main power switch to unit and install lock(s) and lockout tag(s). Ensure electrical service to rooftop unit agrees with voltage and amperage listed on the unit rating plate. Unit may have more than one power switch.

⚠CAUTION

PERSONAL INJURY HAZARD

Failure to follow this caution may result in personal injury.

Sheet metal parts may have sharp edges or burrs. Use care and wear appropriate protective clothing, safety glasses and gloves when handling parts and servicing air conditioning equipment.

Manufacturer reserves the right to discontinue, or change at any time, specifications or designs without notice and without incurring obligations.

PACKAGE USAGE

Carrier Models

MODEL NUMBER	CHASSIS GROUP	UNIT SIZES
50FC	AC-1	08-14

Bryant Models

MODEL NUMBER	CHASSIS GROUP	UNIT SIZES
559K	AC-1	08-14

ICP Models

MODEL NUMBER	CHASSIS GROUP	UNIT SIZES
RAV	AC-1	090-150

LEGEND

AC — Cooling Only (Air Conditioner)
1 — Standard Efficiency
2 — High Efficiency

PACKAGE CONTENTS

Electric Heaters

CRHEATER411A00, 412A00, 414A00-17A00, 420A00-425A00, 427A00, 428A00

QUANTITY	CONTENTS
1	Heater Module
4	Screws
1	Wiring Label
1	Wire Tie
1	Label, Max Temp/Static

Single Point Boxes

CRSINGLE 042A00-045A00, 047A00, 049A00-051A00

CRSINGLE042A00

QUANTITY	ITEM DESCRIPTION
1	Single Point Box Housing Assembly (Height 25 in./639 mm)
1	Terminal Block
3	Conductors, Tap, #10
1	Rain Shield With Conduit Seal
8	Screws, #10 x 1/2 in.
7	Wire Ties
1	Seal Strip

CRSINGLE043A00

QUANTITY	ITEM DESCRIPTION
1	Single Point Box Housing Assembly (Height 25 in./639 mm)
1	Terminal Block/Fuse Holder
1	Fuse Block
2	Terminal Block (TB-10)
6	Fuses, 60-A Class RK5
1	Power Distribution Harness
6	Conductors, Tap, #10
2	Screws, #8 x 1/2 in.
1	Rain Shield With Conduit Seal
8	Screws, #10 x 1/2 in.
7	Wire Ties
1	Seal Strip

CRSINGLE044A00

QUANTITY	ITEM DESCRIPTION
1	Single Point Box Housing Assembly (Height 25 in./639 mm)
1	Terminal Block
2	Fuse Block
6	Fuses, 60-A Class T (600v)
1	Power Distribution Harness
3	Conductors, Tap, #10
1	Rain Shield With Conduit Seal
8	Screws, #10 x 1/2 in.
7	Wire Ties
1	Seal Strip

CRSINGLE045A00

QUANTITY	ITEM DESCRIPTION
1	Single Point Box Housing Assembly (Height 25 in./639 mm)
1	Terminal Block/Fuse Holder
2	Fuse Block
9	Fuses, 60-A Class RK5
1	Power Distribution Harness
6	Conductors, Tap, #10
2	Terminal Block (TB-10)
2	Screws, #8 x 1/2 in.
1	Rain Shield With Conduit Seal
8	Screws, #10 x 1/2 in.
7	Wire Ties
1	Seal Strip

CRSINGLE047A00

QUANTITY	ITEM DESCRIPTION
1	Single Point Box Housing Assembly (Height 33 in./845 mm)
1	Terminal Block
3	Conductors, Tap, #10
1	Rain Shield, Small
1	Rain Shield With Conduit Seal
8	Screws, #10 x 1/2 in.
7	Wire Ties
1	Seal Strip

CRSINGLE049A00

QUANTITY	ITEM DESCRIPTION
1	Single Point Box Housing Assembly (Height 33 in./845 mm)
1	Terminal Block/Fuse Holder
1	Fuse Block
6	Fuses, 60-A Class RK5
1	Power Distribution Harness
8	Conductors, Tap, #10
2	Terminal Block (TB-10)
2	Screws, #8 x 1/2 in.
1	Rain Shield, Small
1	Rain Shield With Conduit Seal
8	Screws, #10 x 1/2 in.
7	Wire Ties
1	Seal Strip

Single Point Boxes (cont)

CRSINGLE050A00

QUANTITY	ITEM DESCRIPTION
1	Single Point Box Housing Assembly (Height 33 in./845 mm)
1	Terminal Block
2	Fuse Block
6	Fuses, 60-A Class T (600v)
1	Power Distribution Harness
3	Conductors, Tap, #10
1	Rain Shield, Small
1	Rain Shield With Conduit Seal
8	Screws, #10 x 1/2 in.
7	Wire Ties
1	Seal Strip

CRSINGLE051A00

QUANTITY	ITEM DESCRIPTION
1	Single Point Box Housing Assembly (Height 33 in./845 mm)
1	Terminal Block/Fuse Holder
2	Fuse Block
9	Fuses, 60-A Class RK5
1	Power Distribution Harness
8	Conductors, Tap, #10
2	Terminal Block (TB-10)
2	Screws, #8 x 1/2 in.
1	Rain Shield, Small
1	Rain Shield With Conduit Seal
8	Screws, #10 x 1/2 in.
7	Wire Ties
1	Seal Strip

GENERAL

Puron® Units

This installation instruction manual describes the installation of electric heaters and associated fuse block/field power termination kits single point box (SPB) on select small rooftop units in nominal cooling capacities from 7.5 to 12.5 tons. These rooftop units use R-410A refrigerant. See Package Usage tables on page 2 for applicable unit models. Unit types include cooling units (AC). Unit Type AC-1 is identified.

This information does not include selection data. Refer to project plans, job submittals and selection programs for heater and field power termination/SPB kit usage.

Electric Heaters

Heaters are shipped with one heater per carton. The carton is marked with a sales package number. On all heaters, the heater model number (as marked on the heater dataplate) is the same as the sales package number.

The heaters are modular in design, with heater frames holding open coil resistance wires strung through ceramic insulators, limit switches and one or two control contactors. Power conductors are attached.

Heater modules are installed in the compartment below the indoor (supply) fan outlet. Access is through the indoor access panel. Heater modules slide into the compartment through the panel heater opening.

Not all available heater modules may be used in every unit. Use only those heater modules that are UL listed for use in a specific size unit. Refer to the label on the unit cabinet for the list of approved heaters. (See Fig. 1 and 2.) See Appendix B on page 14 for electric heater module data.

Single Point Boxes and Fuses

The Single Point Box (SPB) kits provide a field power termination location plus an enclosure for heater fuses when required by code. The SPBs are installed under the unit's main control box and include a cover plus all internal wiring. Minimum components of the SPB are a field power terminal block with tap conductors (to connect to the unit's main control box field terminals). Maximum component population includes up to five fuse blocks.

Fuses for electric heater circuits are required and provided when the unit's MOCP exceeds 60-A or when the total heater Full Load Amp value exceeds 48-A. When fuses are required and provided, the cooling circuit is also provided with fuse protection.

NO FUSES

If the unit's MOCP device rating is 60-A or less, then the MOCP device is recognized as providing the required overcurrent protection to the heater and no internal fusing is required. See tables at the beginning of Appendix A on page 11 for where used information on the single point boxes and for connections figure number.

UNITS WITH FACTORY-INSTALLED HACR

The amp rating of the HACR factory-installed option is based on the size, voltage, indoor motor and other electrical options of the unit as shipped from the factory. When field-installed accessory electric heaters are added or changed in the unit, the HACR may no longer be of the proper amp rating and therefore will need to be removed from the unit. See unit nameplate and label on factory-installed HACR for the amp rating of the HACR that was shipped with the unit from the factory. See unit nameplates for the proper fuse, HACR or maximum over-current protection device required on the unit with field-installed electric heat.

SINGLE POINT BOX CONTENTS

See Package Content tables on page 2 for a list of components included in each single point box kit.

Control Wiring

Heater modules contain one or two heater control contactors. If multiple circuit heater module is installed, the unit can be connected for one-stage or two-stage heating control.

Carrier Corporation
7310 WEST MORRIS STREET
INDIANAPOLIS, IN 46231 U.S.A.

MODEL **50FC-M08A2A5A0A0A0**
SERIAL
REFRIGERANT CHARGE R410A

Carrier Corporation
7310 WEST MORRIS STREET
INDIANAPOLIS, IN 46231 U.S.A.

MODEL **50FC-M08A2A5A0A0A0**
SERIAL

	QTY	VOLTS AC	PH	HZ	RLA	LRA	REF. SYSTEM R410A		TEST PRESSURE GAGE		
COMPR A	1	208/230	3	60	10.3	123	13.2 LBS	5.99 kg	HI	650 PSI	4482 kPa
COMPR B	1	208/230	3	60	10.3	123	LBS	kg	LO	450 PSI	3103 kPa
FAN MTR	QTY	VOLTS AC	PH	HZ	FLA		LBS	kg			
OUTDOOR	1	208/230	3	60	1.5						
INDOOR	1	208/230	3	60	8.6						
ELEC. HEAT											
OTHER											
ERV SUPPLY											
ERV EXHAUST											
ERV WHEEL											

CHARGE SYSTEM PER INSTALLATION INSTRUCTIONS
SUITABLE FOR OUTDOOR INSTALLATION

POWER SUPPLY	PH	HZ	MIN. CKT AMPS	MAX FUSE OR HACR BREAKER PER NEC	MIN UNIT DISCONNECT FLA	MIN UNIT DISCONNECT LRA
208/230 VOLTS	3	60	33	40	35	263
PERMISSIBLE VOLTAGE AT UNIT 253 MAX 187 MIN				MAX OVERCURRENT PROTECTION DEVICE 40		

CONTROL PANEL SCCR: 5kA RMS SYMMETRICAL VOLTAGE: MAX

DOWN SUPPLY
MIN CLEARANCE TO COMBUSTIBLE MATERIALS 1 INCHES 25 mm.
FOR FIRST 12 INCHES 305 mm. OF DUCT WHEN ELECTRIC HEATER IS INSTALLED

SIDE SUPPLY
MIN CLEARANCE TO COMBUSTIBLE MATERIALS 1 INCHES 25 mm.
FOR FIRST 12 INCHES 305 mm. OF DUCT WHEN ELECTRIC HEATER IS INSTALLED

*FOR INSTALLATION ON COMBUSTIBLE FLOORING OR CLASS A,B, OR C ROOFING MATERIAL

ACCESSORY POWER EXHAUST OR HEATER MODEL NUMBER	CHECK HERE	VOLTS	PH	HZ	HEATER FLA	MIN. CKT. AMPS	FUSE OR HACR BREAKER PER NEC	MAXIMUM OVERCURRENT PROTECTION DEVICE	SINGLE PT. BOX MODEL NUMBER	MINIMUM UNIT DISCONNECT FLA	MINIMUM UNIT DISCONNECT LRA
411A		208/240	3	60	21.7/25.5	36/40	40/40	–/–	042	35/36	263/263
412A		208/240	3	60	33.4/38.5	50/57	50/60	–/–	042	46/52	263/263
414A		208/240	3	60	52.1/60.1	74/84	80/90	–/–	043	67/76	263/263
415A		208/240	3	60	66.7/77.0	92/105	100/110	–/–	043	84/96	263/263
416A		208/240	3	60	88.4/102.0	119/136	125/150	–/–	043	109/125	263/263

INSTALLER NOTE:
1. INSTALL ACCESSORY HEATER PER INSTALL INSTR ENCLOSED WITH HEATER. MARK SPACE "CHECK HERE" FOR MODEL USED. USE MIN CKT AMPS AND MAX OVER CURRENT DIVICE AMPS LISTED FOR HEATER.
2. HEATERS ARE MANUFACTURED BY EMERSON HEATING PRODUCTS OR TUTCO ELECTRIC.
3. MAXIMUM OUTLET AIR TEMPERATURE IS 93°C (200°F), MAXIMUM EXTERNAL STATIC IS 0.5 kPA (2.0" w.c.)

	CAPACITY Btu/Hr	CAPACITY kW	IEER	COP
COOLING	87,000	25.5	15.2	

THIS EQUIPMENT COMPLIES WITH THE EFFICIENCY REQUIREMENTS OF ASHRAE 90.1-2016

Fig. 1 — Unit Informative Data Label

Carrier Corporation	MODEL 50FC-M08A2A5A0A0A0	Carrier®
7310 WEST MORRIS STREET INDIANAPOLIS, IN 46231 U.S.A.	SERIAL REFRIGERANT CHARGE R410A	

ELECTRICAL DATA FOR ACCESSORY POWER EXHAUST MODEL CRPWREXH

ACCESSORY POWER EXHAUST NUMBER	CHECK HERE	VOLTS	PH	HZ	POWER EXHAUST FLA	MIN CKT AMPS	FUSE OR HACR BREAKER PER NEC	MAXIMUM OVERCURRENT PROTECTION DEVICE	MINIMUM UNIT DISCONNECT
022A, 028A		208/230	3	60	3.8	37	45	-/-	FLA 39 LRA 267

ELECTRICAL DATA FOR ACCESSORY POWER EXHAUST MODEL INSTALLED IN COMBINATAION WITH ELECTRIC HEATER MODEL CRHEATER

ACCESSORY HEATER NUMBER	CHECK HERE	VOLTS	PH	HZ	HEATER FLA	FUSE OR HACR BREAKERPER NEC	MAXIMUM OVERCURRENT PROTECTION DEVICE	MINIMUM UNIT DISCONNECT
411A		208/240	3	60	21.7/25.0	MIN CKT AMPS 40/44		FLA 39/40
SINGLE PT BOX MODEL NUMBER 042						45/45	-/-	LRA 267/267
412A		208/240	3	60	33.4/38.5	MIN CKT AMPS 55/61		FLA 50/56
SINGLE PT BOX MODEL NUMBER 043						60/70	-/-	LRA 267/267
414A		208/240	3	60	52.1/60.1	MIN CKT AMPS 78/88		FLA 72/81
SINGLE PT BOX MODEL NUMBER 043						80/90	-/-	LRA 267/267
415A		208/240	3	60	66.7/77.0	MIN CKT AMPS 97/109		FLA 88/100
SINGLE PT BOX MODEL NUMBER 043						100/110	-/-	LRA 267/267
416A		208/240	3	60	88.4/102.0	MIN CKT AMPS 124/141		FLA 113/129
SINGLE PT BOX MODEL NUMBER 045						125/150	-/-	LRA 267/267
						MIN CKT AMPS		FLA
								LRA

INSTALLER NOTE:

1. INSTALL ACCESSORY HEATER AND/OR POWER EXHAUST PER INSTALL INSTR ENCLOSED WITH HEATER AND POWER EXHAUST MARKSPACE “CHECK HERE” FOR MODEL USED USE MIN CKT AMPS AND MAX OVER CURRENT DIVICE AMPS LISTED FOR HEATER AND POWER EXHAUST.
2. HEATERS ARE MANUFACTURED BY EMERSON HEATING PRODUCTS OR TUTCO ELECTRIC.
3. MAXIMUM OUTLET AIR TEMPERATURE IS 93°C (200°F), MAXIMUM EXTERNAL STATIC IS 0.5 kPA (2.0” w.c.)

50FC-MO8A2A5A0A0A0

Fig. 2 — Unit Informative Data Label, Power Exhaust Installed

GENERAL INSTALLATION SEQUENCE

1. Pre-stage heater packages and single point boxes by placing the required component cartons at each unit.
2. Check the heater sales package number and single point box part number (if used) against the part numbers on the unit's dataplate. See Fig. 1 and 2 for typical data.
3. Disconnect power wiring into unit control box from factory-installed non-fused disconnect switch or HACR breaker and withdraw wiring from control box.
4. Install the single point box and connect power wiring tap conductors to field power terminals in main control box.
5. Remove heater cover and save screws.
6. Install the electric heater module and connect heater power conductors to single point box or main unit control box per appropriate connections figure. (See Appendix A on page 11.) See Fig. 3 for typical installation.
7. Connect the heater control contactors to unit terminal block TB4.
8. Mark the unit dataplate to indicate which heater module(s) have been installed.
9. Select and install suitable field power conductors from external safety disconnect to unit power connection points, or confirm wiring already provided is suitable for required MIN CKT AMPS. NOTE: The required wire size ampacity for the field power supply conductors as marked on the unit dataplate as MIN CKT AMPS for accessory heater(s) plus convenience outlet and power exhaust when provided.

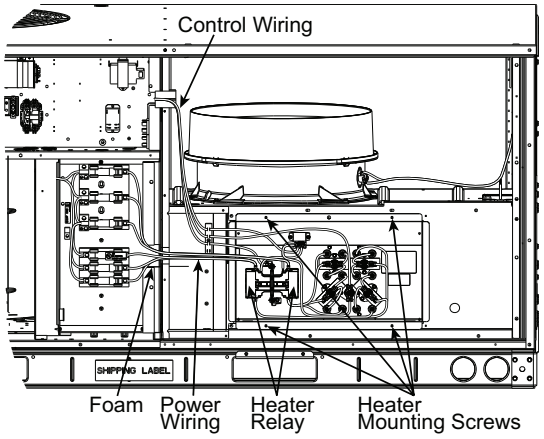

Fig. 3 — Typical Single Point Kit Installation

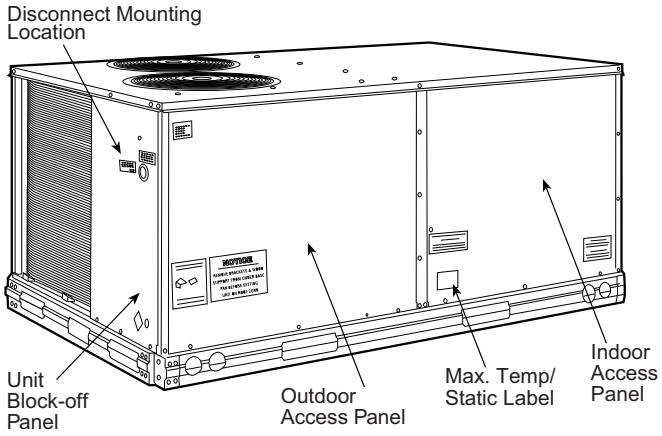

Fig. 4 — Typical Access Panel Location

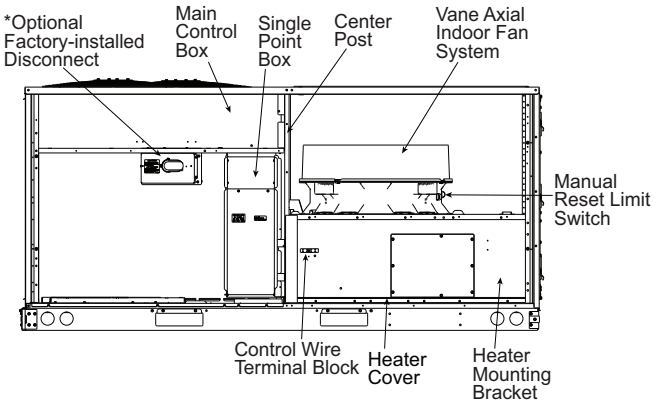

*Unit fuse box for optional HSCCR units.

Fig. 5 — Typical Component Location

INSTALLATION INSTRUCTIONS

Compare the sales package number(s) for scheduled heater modules against the approved usage table on the unit's dataplate. See Fig. 1 and 2 for typical dataplate. If the scheduled heater usage does not appear on the unit dataplate label, STOP. Contact the project engineer or the local distributor sales office for clarification.

Open the cartons and inspect for damage.

Installing Single Point Box

1. Disconnect power to the unit. Lockout/tag-out on unit disconnect switch.
2. Remove the outdoor access panel, control box cover, and indoor access panels from the unit. Save screws. (See Fig. 4.)
3. Use a voltmeter to check that no power is present at unit terminal block.
4. Remove control box cover and center post. Save screws. (See Fig. 5.)
5. If unit does not have the factory-installed disconnect or HACR option or has not had field power wiring connected, skip to Step 6.
   When unit is equipped with factory-installed disconnect or HACR or has field power wiring connected, disconnect the power leads at the control box terminals and withdraw the conductors from the control box.
6. Add seal strip to the rear bottom corner of the control panel as shown in Fig. 6. Foil tape open screw holes on the back of the single point box as shown in Fig. 6. Different single point boxes will have different screw holes open.

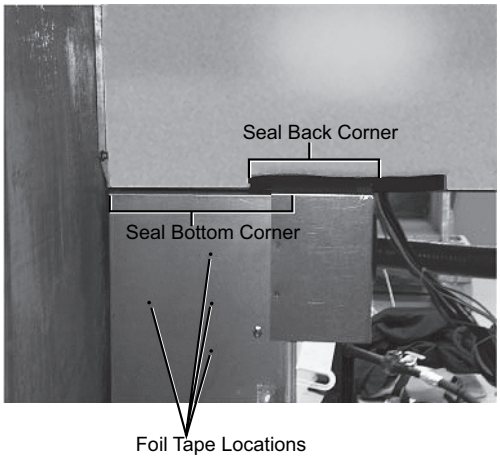

Fig. 6 — Seal Strip and Foil Tape Location

7. All bushings in the area of the control box where the single point box (SPB) mounts, must be removed prior to securing the SPB to the control box. (See Fig. 7.) Also, for units installed in the snow belt, all unplugged holes in the bottom of the control box which are not used must be plugged before installing the SPB. Use foil tape or reinstall the bushings from the outside of the control box prior to securing the SPB. (See Fig. 8.)

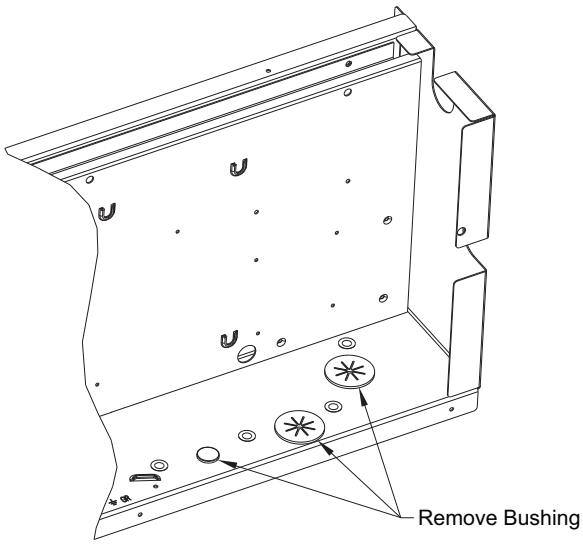

Fig. 7 — Control Box - Bushings to Remove

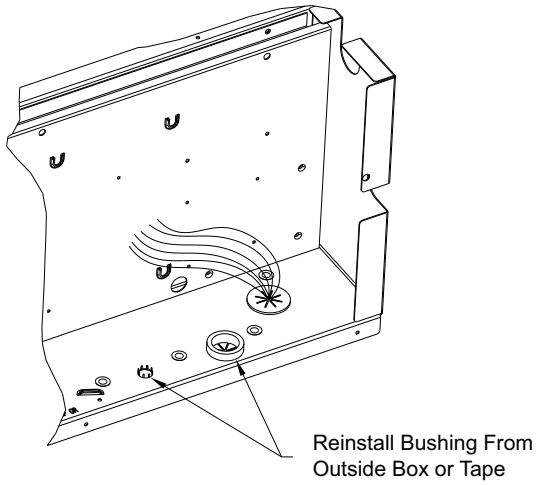

Fig. 8 — Bushings Replaced from Outside Control Box

8. Remove the single point box cover. Secure single point box to the underside of the control box with the 2 screws provided. (See Fig. 3.) Re-install bushing on the SPB tap conductors. (See Fig. 8.)
9. Secure the rainshield (conduit drip boot bracket) assembly to the back of the single point box with 2 of the screws provided. (See Fig. 5.) The channel portion of the bracket assembly extends to the top panel behind the control box. Secure all wires to bracket with field-supplied wire tie as shown. (See Fig. 9.)
10. Connect power tap conductors to unit main control box per the following instructions based on one set or multiple sets of power taps. Refer to Appendix A and the wiring diagram attached to the unit for assistance if needed. NOTE: Some wire connectors may need to be added or removed based on the unit and the single point kit used.

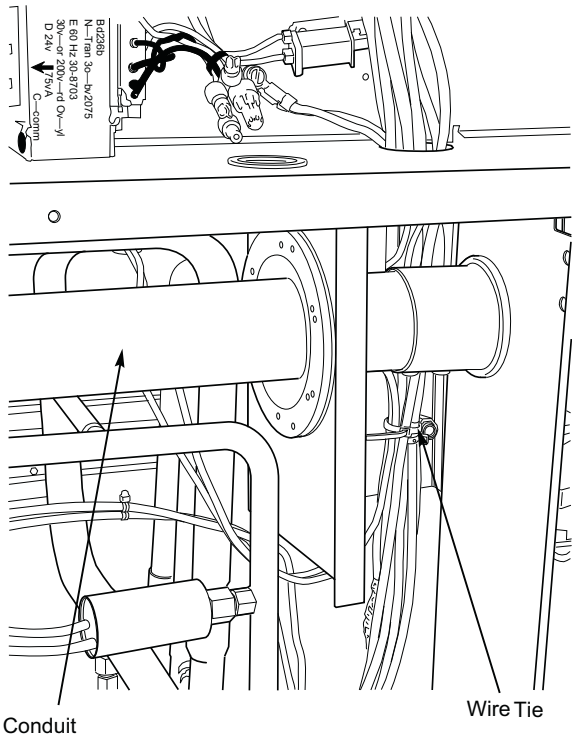

Fig. 9 — Typical Conduit Installation

SINGLE POINT BOXES WITH ONE SET OF TAP CONDUCTORS

1. CRSINGLE042A, 044A, 047A, 050A
   a. Route the set of tap conductors attached at the upper fuse block or terminal block with bushing (Step 8) into the main control box.
   b. Connect the set of tap conductors to unit terminal block TB1; connect at:
      • BLK: terminal 11
      • YEL: terminal 12
      • BLU: terminal 13

SINGLE POINT BOXES WITH TWO OR THREE TAP CONDUCTORS

1. CRSINGLE043A, 045A, 049A, 051A
   a. Route the first set of tap conductors attached at upper fuse block with bushing (Step 8), into the main control box.
   b. Route the second set of tap conductors (attached at second fuse block) into the main control box.
   c. Connect the first set of tap conductors to unit terminal block TB1; connect at:
      BLK: terminal 11
      YEL: terminal 12
      BLU: terminal 13
   d. Remove the factory BLK and YEL wires from TB1 that connect to C2 contactor and connect these to the BLK and YEL wires in the second set of tap conductors from the single point kit. NOTE: For BLK to BLK and YEL to YEL use electrical connectors or splices and tape for best practices.
   e. Install TB10 included in the SPB to the left of the TB1 as shown in the unit wiring diagram.
   f. Remove the factory ORN C2 wire from L3 of TB1 and connect it to new, installed TB10.

g. In the second set of tap conductions, add provided 1/4 in. female QC on BLU SPB wire (if required) and connect to TB10.

Installing Electric Heater

1. Identify heater cover to remove. (See Fig. 10-12.) Remove heater cover and save cover and screws.
2. Open the heater package and remove the heater module, screws, wiring label, miscellaneous parts.
3. Install the heater module in the heater support bracket opening(s). Fasten heater module to heater mounting bracket with the 4 screws saved from Step 1.
4. Route power wires from heater module through the foam bushing in the center partition and into the single point box. (See Fig. 3.) Connect to terminal block or fuse blocks per schematics in Appendix A or B. See Tables at beginning of each Appendix to identify the appropriate figure.
   All heaters are single bank heaters except CRHEATER414A00, 415A00, 421A00, 422A00 and 427A00, which are dual bank heaters. These heaters will be wired as two heaters (i.e., 6 leads). Fusing is shown pictorially on the unit wiring schematic label. See Fig. B and D in Appendix A. See Fig. A-F for wiring assembly.
   If no single point box is required for the unit and heater combination, run the heater power supply wiring through the grommet holes to the main unit control box's field power connection points or to optional factory-supplied disconnect.
5. Factory control wiring for heaters runs from unit control box to terminal block TB-4, mounted in the heater compartment to the left of the heater module. (See Fig. 5 and 13.) Connect the heater control wiring at TB-4.

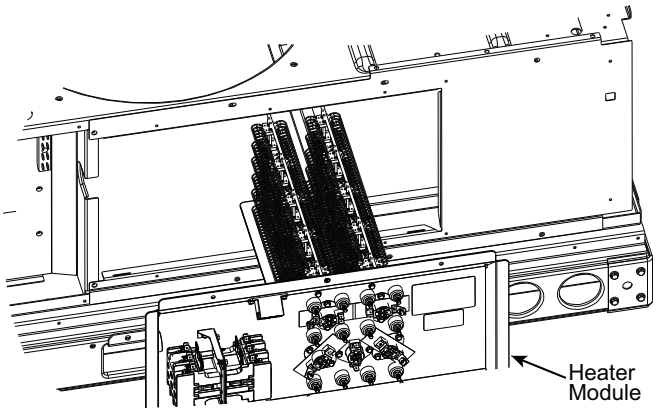

Fig. 10 — Typical Electric Heat Installation

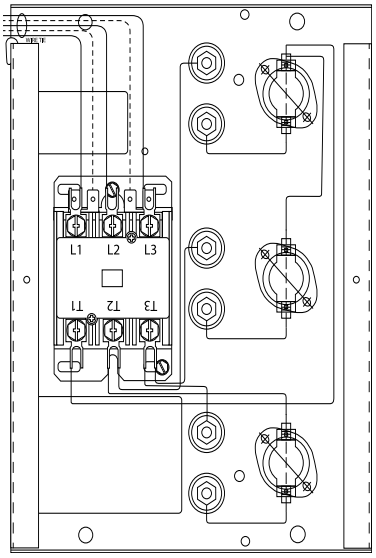

Fig. 11 — Typical 3-Phase Wiring Installed

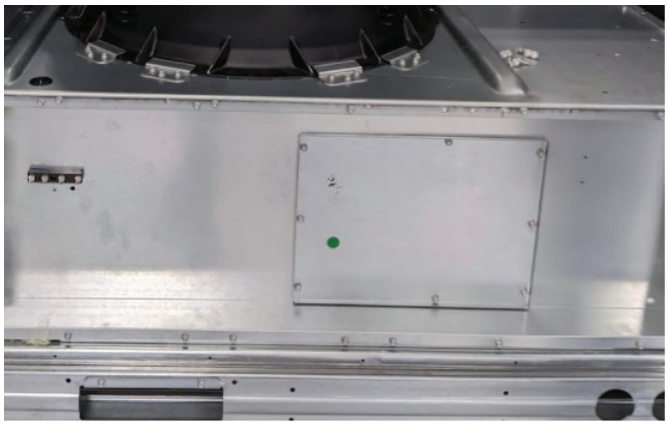

Fig. 12 — Heater Cover

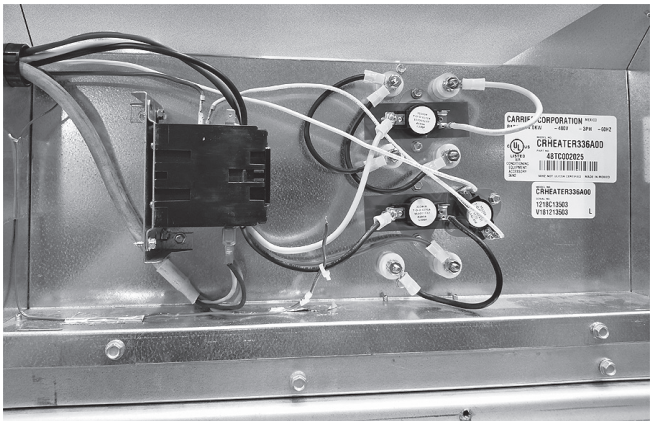

Fig. 13 — Heater Wiring

UNIT POWER SUPPLY WIRING – ALL UNITS

NOTE: Installers of unit power supply wiring connecting to these air conditioning and heat pump units must be familiar with applicable requirements of the National Electrical Code (NFPA Standard 70), Articles 440, 430 and 424 dealing with multiple load systems incorporating refrigeration compressors, motors and electric heating equipment. Installers must also be familiar with and observe all local codes regarding unit power supply wiring.

In most instances, adding electric heaters to these units will result in an increase in unit power supply wire size compared to base unit electrical loads. These changes may also impact the size selection of the branch circuit overload protection device and the unit safety disconnect switch. Check the unit's informative data label (see Fig. 1 and 2 for examples) of minimum wiring sizing ampacity for full combined load (including power exhaust if also installed), for branch circuit protection size (a maximum value), and for unit minimum disconnect switch size. (See Table 1.)

Table 1 — Informative Dataplate Label Designations

DEVICE	DATAPLATE DESIGNATION
Power Supply Wire	MIN CKT AMPS
Branch Circuit Protection	FUSE OR HACR BREAKER
Disconnect Switch	MINIMUM UNIT DISCONNECT

All wiring that terminates at a unit-mounted terminal must be selected from wiring materials under the NEC Table 310.15(B)(16), 75°C (or higher) column only. Check specifications for external disconnect lug sizes to determine if 60°C wiring materials may be used between branch circuit origin and the disconnect switch.

There are four different situations that an installer can encounter with these units. Three are for new unit installations (base unit has not been connected to a power supply already): Unit without factory disconnect switch, unit with factory disconnect switch, and unit with factory HACR breaker. The fourth situation is for an existing unit already connected to a power supply and the heaters are being retrofitted. For each situation, there is usually a without single point box and a with single point box condition. Each situation is discussed below.

New Unit Without Factory-Installed Non-Fused Disconnect or HACR

INSTALLATION -SINGLE POINT BOX (ALL UNITS)

Unit power supply wires from the external (field-supplied) disconnect switch are connected to the base unit's power connection terminal lugs. Refer to unit wiring label to identify these terminals (these may be lugs on contactors or at power terminal block). The heater power wires are also connected at these terminals.

Remove knockouts for appropriate size conduit from unit blockoff panel and single point box. Install conduit (rigid or electrometallic tubing) through conduit drip boot as shown. (See Fig. 9.) Drip boot will accept conduit sizes 3/4 in. to 1-1/2 in. The drip boot eliminates the need for watertight conduit fittings at the single point box. (See Fig. 14.)

Unit power supply wires from the external (field-supplied) disconnect switch are connected to the power lugs on the field connection device provided in the single point box. This device may be a terminal block or fuse block FU2's line side terminals. The heater power wires are connected to the load side terminals on the same device.

New Unit With Factory Disconnect

The optional factory-supplied disconnect has a maximum rating per Table 2.

Table 2 — Optional Factory Installed Disconnect Amp Ratings

UNIT GROUP	UNIT SIZES	VOLTS	DISCONNECT SIZE AMPS
AC-1	04-07 036-072	208/230	80
		460, 575	80

LEGEND
AC-1–Standard Efficiency

Check this unit's dataplate for the MINIMUM DISCONNECT SWITCH value (see Fig. 1 and 2) and compare to the Table 2 value.

If required minimum disconnect value is LOWER than rating in Table 2:

Reconnect the factory wiring from the factory disconnect at the single point box's terminal block or fuse block FU2's line side terminals (or to main control box's line connection lugs if no single point box is installed). Remove any factory test leads connected at disconnect line side terminals; discard these wires. Connect unit power supply wires to disconnect switch line side lugs.

If required minimum disconnect value is HIGHER than rating in Table 2:

For unit with 60-A, 80-A or 100-A disconnect

Remove the factory-installed non-fused disconnect switch assembly and wiring. Install a field-supplied disconnect switch sized per unit marking. Complete connections per instructions above under "New Unit Without Factory-Installed Non-Fused Disconnect or HACR."

Existing Unit

An existing unit will usually have been installed following the values marked on the base unit's dataplate for wire sizing, branch circuit over-current protection and disconnect switch rating. When electric heaters are added to air conditioning (cooling) units, these values may be changed; when electric heaters are added to heat pump units, one or more of these values will be changed.

Check the installed unit's field power wires for conductor size and determine conductor rated ampacity per NEC Table 310.15(B)(16). Compare this value to the MIN CKT AMPS value on the unit dataplate for base unit plus electric heaters (plus power exhaust if connected). If the MIN CKT AMPS value is greater than the rated ampacity of the power supply wires, the unit power supply conductors must be replaced.

NOTE: Supply wiring must comply with NEC (National Electrical Code) and all local requirements.

Check the installed unit's branch circuit over-current protection device (fuse or HACR breaker) for rating in amps. Compare this value to the FUSE OR HACR BREAKER value on the unit data-

plate for base unit plus electric heaters (plus power exhaust if connected). If the FUSE OR HACR BREAKER value is greater than the rated ampacity of the installed device, the unit branch circuit over-current protection device must be replaced. Check the installed unit's disconnect switch for rating in amps. Compare this value to MINIMUM UNIT DISCONNECT value on the unit dataplate for base unit plus electric heaters (plus power exhaust if connected). If the MINIMUM UNIT DISCONNECT value is greater than the rated ampacity of the installed disconnect switch, the unit disconnect switch must be replaced.

To complete the unit power wiring at the Single Point Box or base unit terminals, follow the appropriate directions under "New Unit" discussions above. (See Table 1.)

Complete Unit Installation

1. Mark the appropriate block on the unit nameplate for the accessory heater kW installed. Note the required MIN CKT AMPS value for this unit-heater combination. Ensure the field power conductors are sized to handle this ampacity.
2. Locate the heater cover. For all heaters, the heater cover is the plate removed from the heater mounting bracket in Step 5 on page 6 (General Installation Sequence).
3. Place adhesive-backed wiring label on flanged side of heater cover.
4. Fasten heater cover to heater module with 2 screws provided with heater. Flanges of cover must face out. (See Fig. 12.)
5. Set manual reset limit switch (on supply fan housing) by depressing button located between the terminals on the switch. (See Fig. 5.)
6. Close single point box cover and secure with one screw.
7. Replace control box cover, using remainder of screws saved from page 6, Step 4 of Installing Single Point Box sections.
8. Run conduit through (rigid or EMT) the conduit drip boot in the rain shield bracket to the single point box. Provide an appropriate fitting to connect the conduit to the single point box wall and ground appropriately. (See Fig. 13.) Drip boot eliminates the need for watertight conduit fittings at the single point box.
9. Run wire through conduit connecting outside power to the designated terminals at the top of the single point box. Ground appropriately. (See Fig. 14.)
10. Replace indoor and outdoor panels with screws saved from Step 2 of Installing Single Point Box section on page 6. Place adhesive-backed Max. Air/Max. Static label on external panel that covers heaters. (See Fig. 4 and 15.)
11. If all other work on the unit is done, reapply unit power per lockout/tag-out procedures.

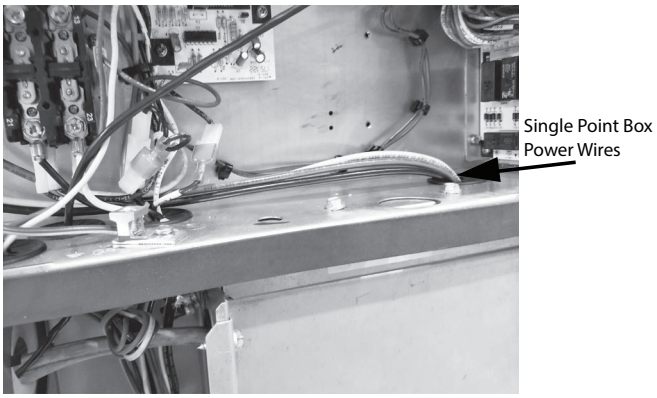

Fig. 14 — Typical Single Point Box Power Wiring

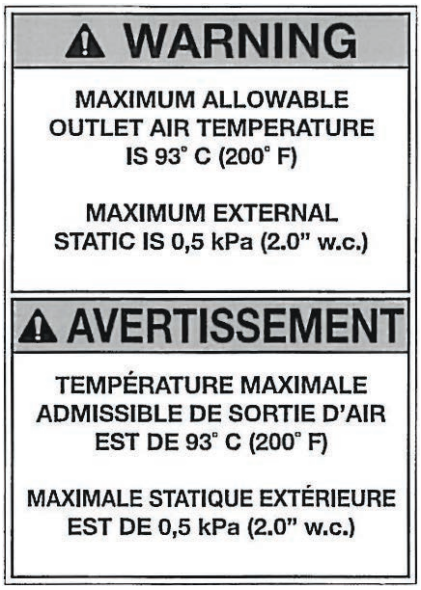

Fig. 15 — Max Air Temp/Max Ext. Static

APPENDIX A — AC-1 COOLING APPLICATIONS

Table A — Single Point Box Wiring Diagrams for AC-1 and Heater Units

SPB CRSINGLEnnnA00	AC-1 UNITS			
	08 090	09 102	12 0120	14 150
042	Fig. A, B	—	—	—
043	Fig. C, D	—	—	—
044	Fig. F	—	—	—
045	Fig. E	—	—	—
047	—	Fig. A, B	Fig. A, B	Fig. A, B
049	—	Fig. C, D	Fig. C, D	Fig. C, D
050	—	Fig. F	Fig. F	Fig. E
051	—	Fig. E	Fig. E	Fig. F

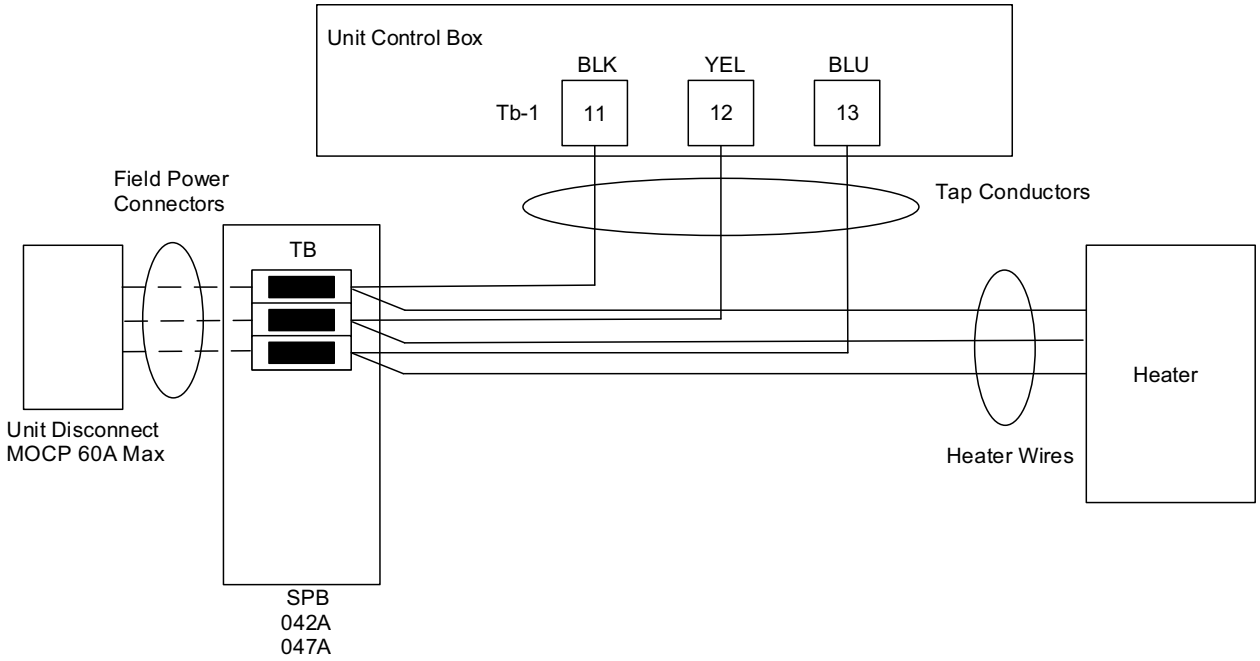

Fig. A — AC Single Point Box CRSINGLE042A00,047A (AC-1, Sizes 08 and 09-14; 411A, 420A, 425A)

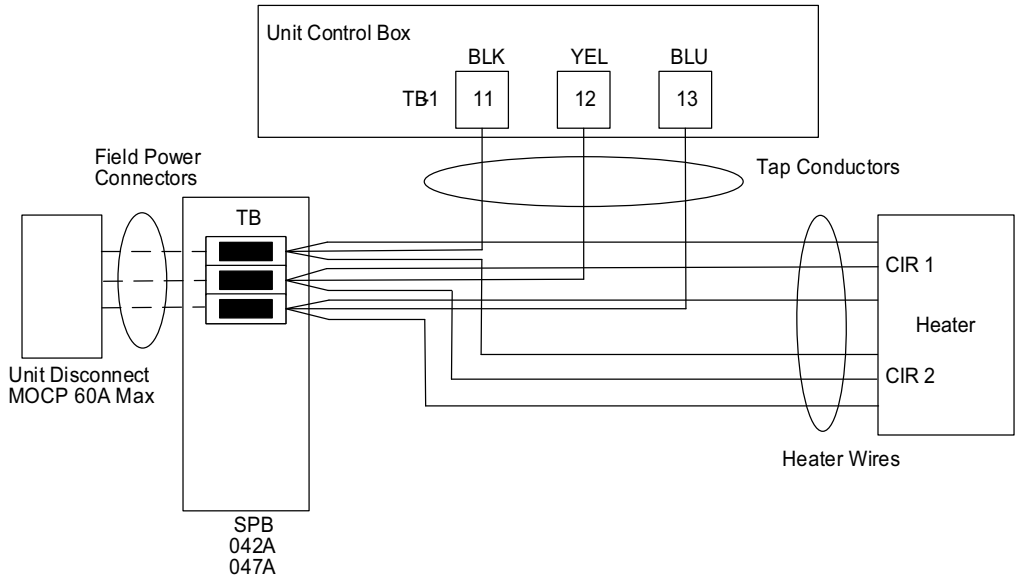

Fig. B — AC Single Point Box CRSINGLE042A00,047A (AC-1, Sizes 08 and 09-14; 421A,422A and 427A) 2 Bank

APPENDIX A — AC-1 COOLING APPLICATIONS

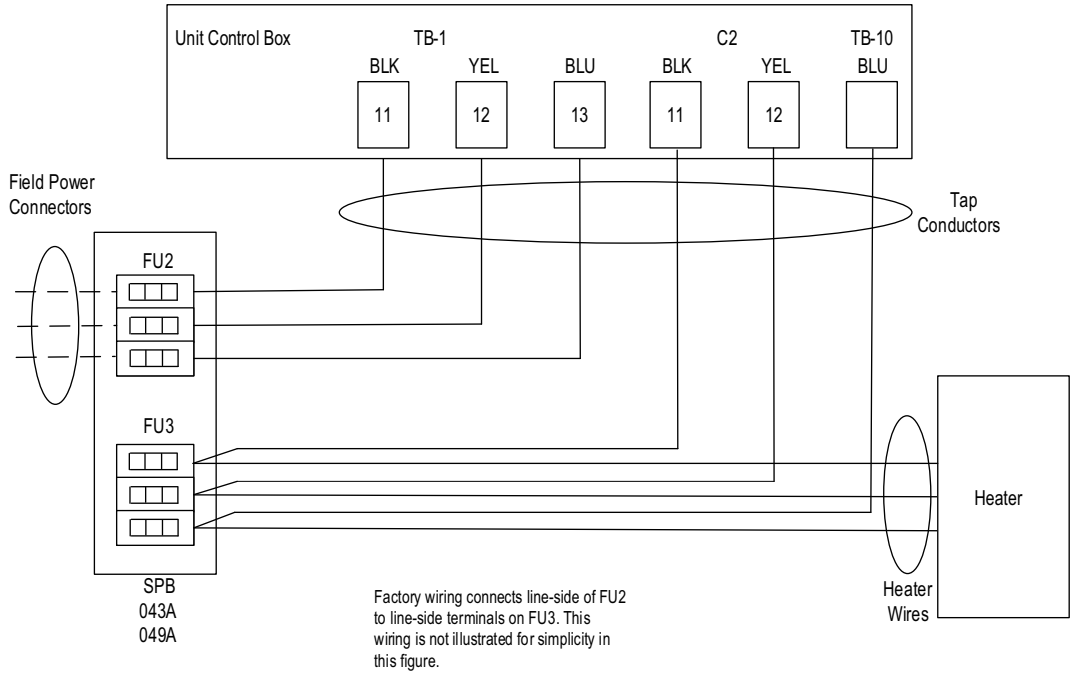

Fig. C — AC Single Point Box CRSINGLE043A00, and 049A00 (AC-1, Sizes 08 and 09-14; 411A and 412A)

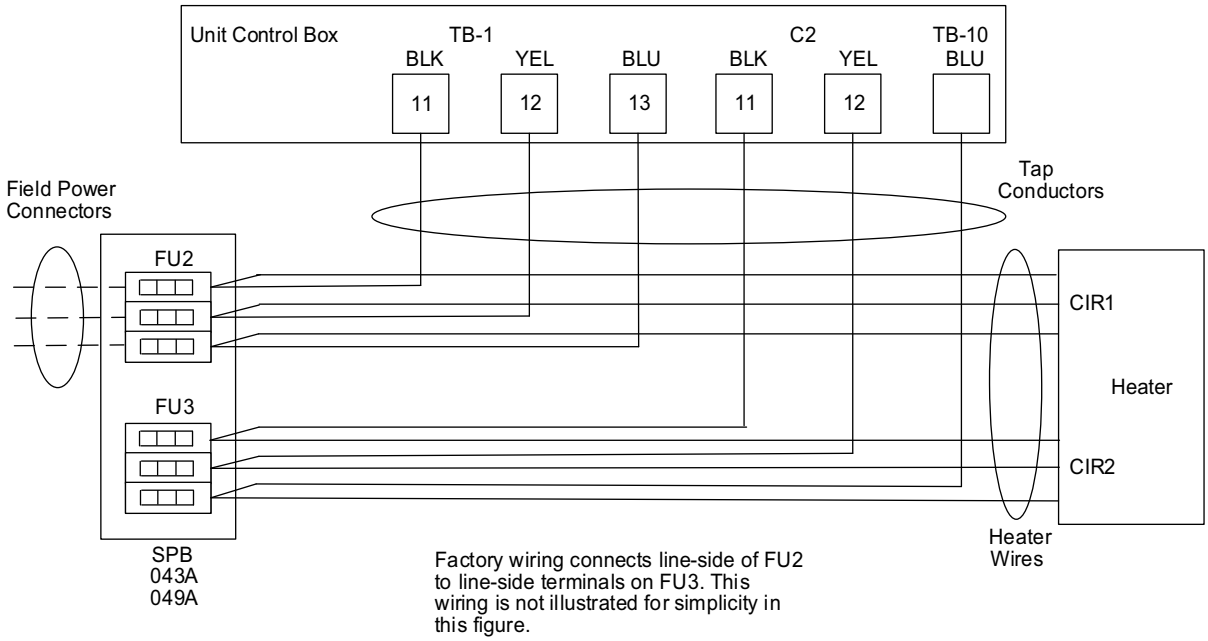

Fig. D — AC/HP Single Point Box CRSINGLE043A00, and 049A00 (AC-1, Sizes 08 and 09-14; 414A and 415A) (2 Bank)

APPENDIX A — AC-1 COOLING APPLICATIONS

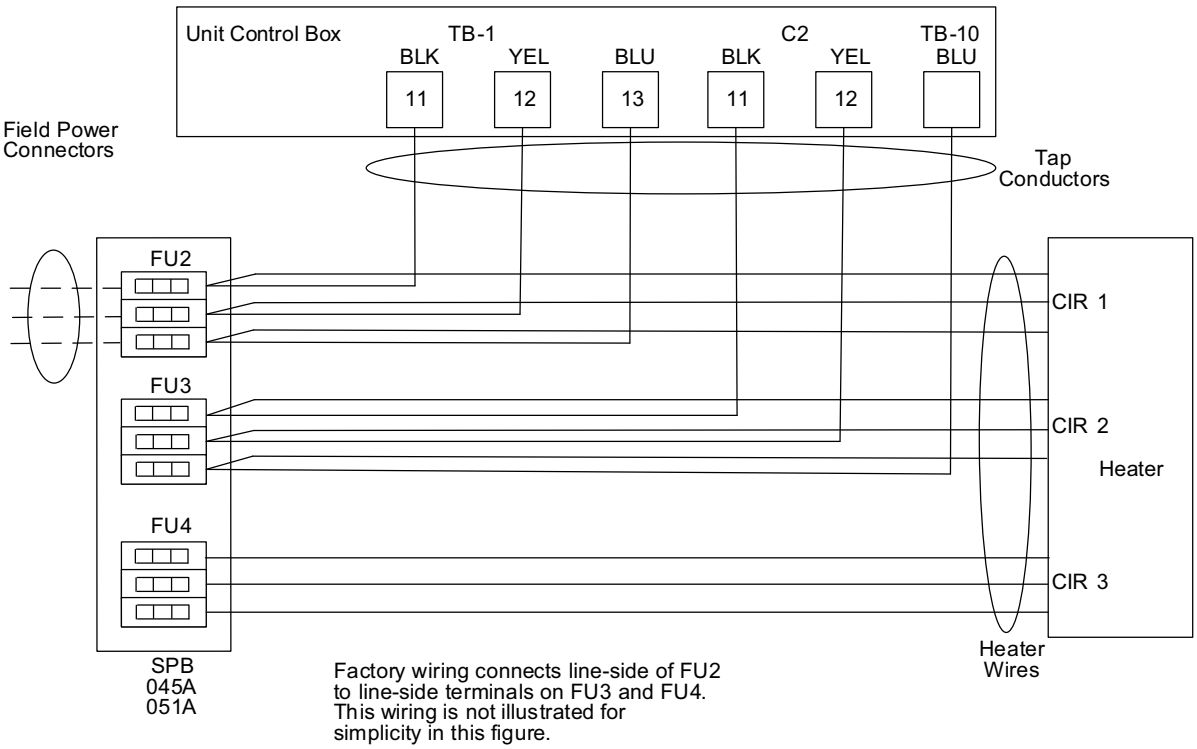

Fig. E — AC Single Point Box CRSINGLE045A00, 051A00 (AC-1, Size 08 and 09-14; 416A and 417A)

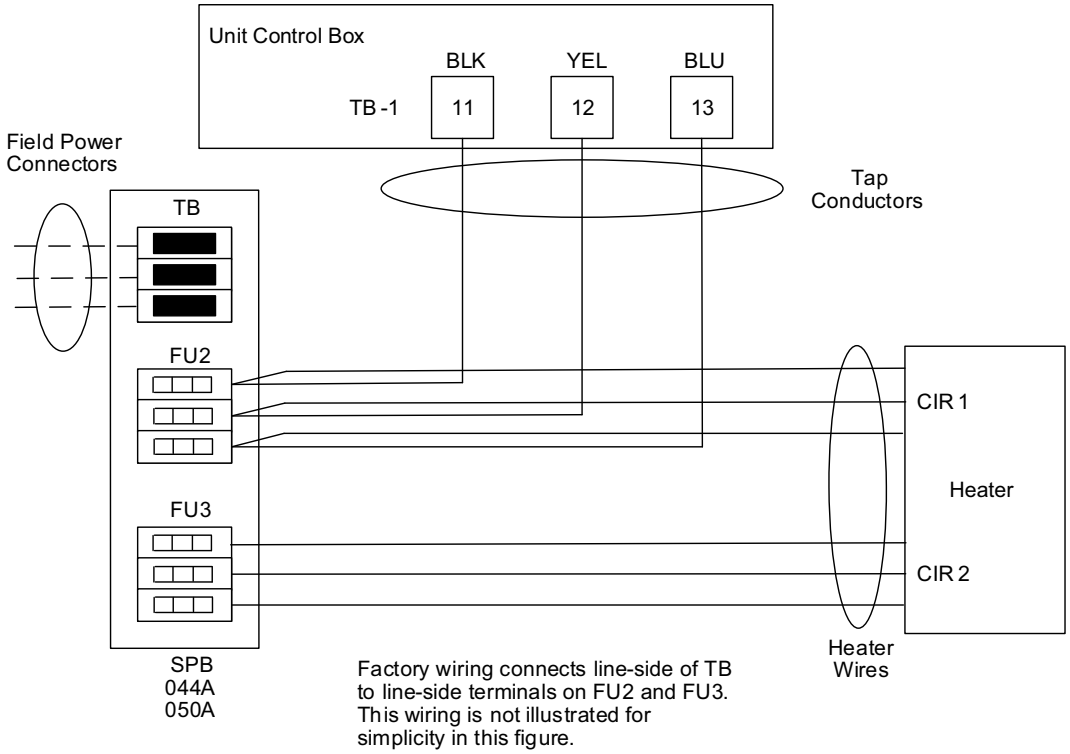

Fig. F — AC Single Point Box CRSINGLE044A00, 050A00 (AC-1, Size 08 and 09-14; 422A, 423A, 424A, 428A)

APPENDIX B — ELECTRICAL HEATER DATA

NOTE: ELECTRIC HEATER DATA (CRHEATERnnna00)

HEATER MODEL NUMBER	v/Ph/Hz	kW	NUMBER OF STAGES	USED ON
				AC-1
411A	208/230-3-60	10.0	1	08-14 090-150
412A		16.0	1	08-14 090-150
414A		25.0	2	08,09 090,102
415A		32.0	2	08-14 090-150
416A		42.0	2	08-14 090-150
417A		50.0	2	12,14 120,150
420A	460-3-60	15.0	1	08-14 090-150
421A		25.0	2	08,09 090,102
422A		33.0	2	08-14 090-150
423A		41.0	2	08-14 090-150
424A		50.0	2	12,14 120,150
425A	575-3-60	18.0	1	08-14 090-150
427A		36.0	2	08-14 090-150
428A		50.0	2	08-14 090-150

APPENDIX B — ELECTRICAL HEATER DATA

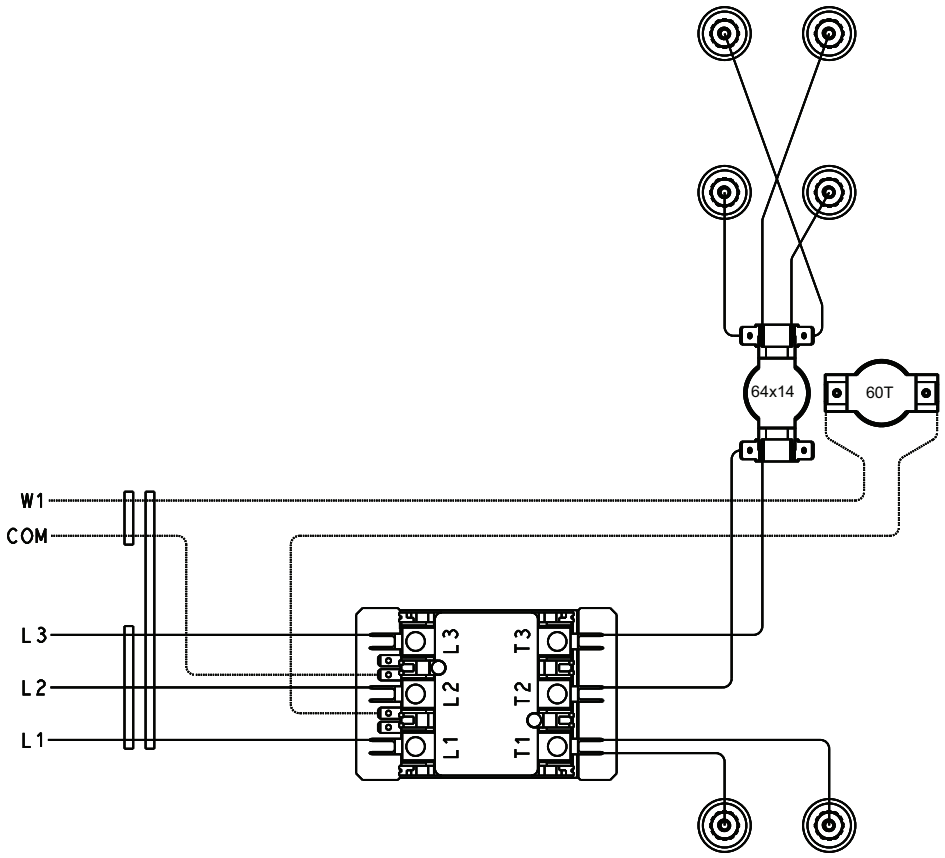

Fig. A — CRHEATER411A, 412A, 420A, 425A Wiring Assembly

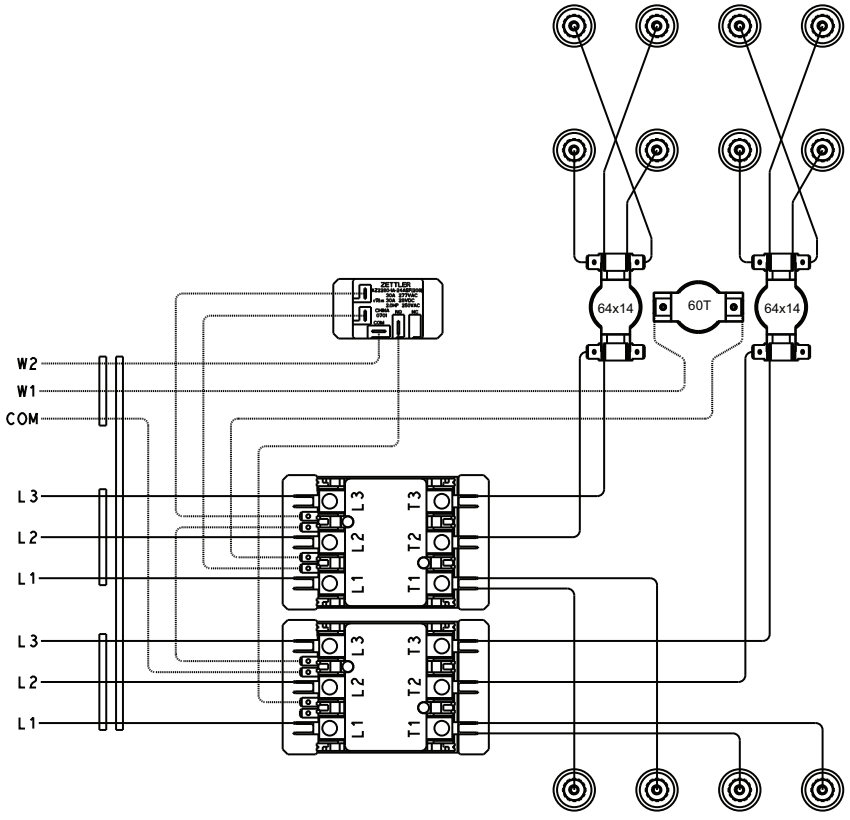

Fig. B — CRHEATER414A, 415A, 421A, 422A, 423A, 424A, 427A, 428A Wiring Assembly

APPENDIX B — ELECTRICAL HEATER DATA

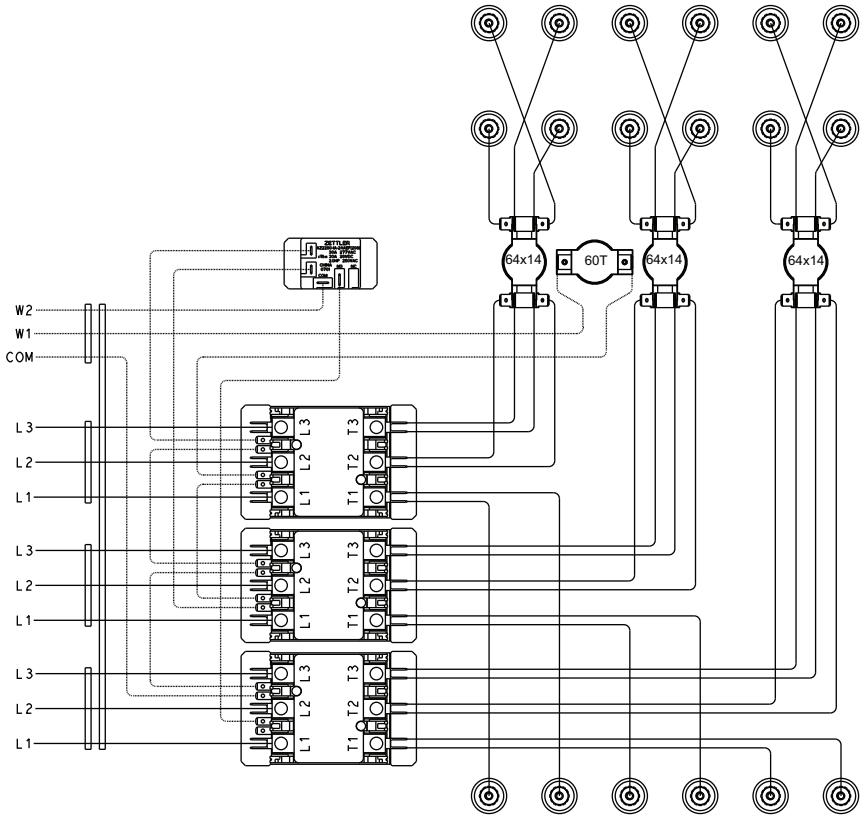

Fig. C — CRHEATER416A, 417A Wiring Assembly

© 2019 Carrier Corporation