AGAGC8NPS01C
Gas Conversion Kit, Natural-to-Propane
Non-Condensing (80%) Furnace
45,000 BTUh to 155,000 BTUh Models Only

Installation Instructions

A200203

NOTE: Read the entire instruction manual before starting the installation.

SAFETY CONSIDERATION

⚠ WARNING

FIRE, EXPLOSION, ELECTRICAL SHOCK, AND CARBON MONOXIDE POISONING HAZARD

Failure to follow this warning could result in personal injury or death.

This conversion kit shall be installed by a qualified service agency in accordance with the manufacturer's instructions and all applicable codes and requirements of the authority having jurisdiction. If the information in these instructions is not followed exactly, a fire, explosion, or production of carbon monoxide could result causing property damage, personal injury, or loss of life. The qualified service agency is responsible for the proper installation of this furnace with this kit. The installation is not proper and complete until the operation of the converted appliance is checked as specified in the manufacturer's instructions supplied with the kit.

⚠ AVERTISSEMENT

LE FEU, L'EXPLOSION, CHOC ELECTRIQUE, ET MONOXYDE DE CARBONE EMPOISONNER

Cette trousse de conversion doit être installée par un servie d'entretien qualifié, selon les instructions du fabricant et selon toutes les exigences et tous les codes pertinents de l'autorité compétente. Assurezvous de bien suivre les instructions dans cette notice pour réduire au minimum le risque d'incendie, d'explosion ou la production de monoxyde de carbone pouvant causer des dommages matériels, de blessure ou la mort. Le service d'entretien qualifié est responsable de l'installation de cette trousse. L'installation n'est pas adéquate ni complète tant que le bon fonctionnement de l'appereil converti n'a pas été vérfié selon les instructions du fabricant fornies avec la trousse.

Installing and servicing heating equipment can be hazardous due to gas and electrical components. Only trained and qualified personnel should install, repair, or service heating equipment.

Untrained personnel can perform basic maintenance functions such as cleaning and replacing air filters. Trained service personnel must perform all other operations. When working on heating equipment, observe precautions in the literature, on tags, and on labels attached to or shipped with the unit, and other safety precautions that may apply.

Follow all safety codes. In the United States, follow all safety codes including the current edition of the National Fuel Gas Code (NFGC) NFPA No. 54/ANSI Z223.1. In Canada, refer to the current edition of the National Standard of Canada, Natural Gas and Propane Installation Codes (NSCNGPIC), CAN/CSA-B149.1 and 2. Wear safety glasses and work gloves. Have a fire extinguisher available during start-up, adjustment steps, and service calls.

Recognize safety information. This is the safety-alert symbol ⚠. When you see this symbol on the furnace and in instructions or manuals, be alert to the potential for personal injury. Understand the signal words DANGER, WARNING, CAUTION and NOTE. The words DANGER, WARNING, and CAUTION are used with the safety alert symbol. DANGER identifies the most serious hazards which will result in severe personal injury or death. WARNING signifies a hazard which could result in personal injury or death. CAUTION is used to identify unsafe practices which may result in minor personal injury or product and property damage. NOTE is used to highlight suggestions which will result in enhanced installation, reliability, or operation.

INTRODUCTION

⚠ WARNING

FIRE, EXPLOSION, ELECTRICAL SHOCK AND CARBON MONOXIDE POISONING HAZARD

Failure to follow instructions could result in personal injury, death or property damage.

Improper installation, adjustment, alteration, service, maintenance, or use can cause carbon monoxide poisoning, explosion, fire, electrical shock, or other conditions, which could result in personal injury or death. Consult your distributor or branch for information or assistance. The qualified installer or agency must use only factory-authorized kits or accessories when servicing this product.

⚠ WARNING

FIRE, EXPLOSION, ELECTRICAL SHOCK HAZARD

Failure to follow this warning could result in personal injury, death or property damage.

Gas supply MUST be shut off before disconnecting electrical power and proceeding with conversion.

⚠ WARNING

ELECTRICAL SHOCK, FIRE OR EXPLOSION HAZARD

Failure to follow this warning could result in personal injury, death or property damage.

Before installing, modifying, or servicing system, main electrical disconnect switch must be in the OFF position and install a lockout tag. There may be more than one disconnect switch. Lock out and tag switch with a suitable warning label. Verify proper operation after servicing.

⚠ CAUTION

UNIT OPERATION HAZARD

Failure to follow this caution may result in unit damage or improper operation.

Do NOT use this kit with furnaces with an input of 26,000 BTUh; the unit will be severely over-fired. This could result in delayed ignition, sooting or premature heat exchanger failure.

This instruction covers the installation of gas conversion kit to convert the following furnaces from natural gas usage to propane gas usage. See appropriate section for your furnace type.

Table 1 – Kit Contents

QUANTITY	DESCRIPTION
1	VALVE CVRSN KIT - W/R SPRING 92-0659
7	ORIFICE - 1.30mm
7	ORIFICE - 1.25mm
7	ORIFICE - #55
7	ORIFICE - #56
7	MIXER SCREW - NON-CONDENSING FURNACES
1	CONNECTOR - BRASS 1/8” NPT X2”
1	CONNECTOR - 1/4QC ME BOTH ENDS
1	ELBOW,STREET - 150# 1/8” NPT
1	ELBOW,STREET - BRASS 1/8” NPT
1	NIPPLE - HEX (BRASS)
1	SWITCH,PRESSURE
1	TEE - MALE BRANCH (BRASS)
1	TEE, STREET - MALE BRANCH (BRASS)
1	BIT, DRILL 5/64” NON-CONDENSING
1	WIRE ASSY - ORANGE
1	WIRE ASSY - ORANGE
1	LABEL 348709-201 through 348709-205
1	INSTRUCTIONS

SINGLE-STAGE NON-CONDENSING FURNACES

Induced-Combustion furnaces with 42,000 to 154,000 BTUh (not all models have all sizes) gas input rates.

TWO-STAGE & VARIABLE NON-CONDENSING FURNACES

Induced-Combustion furnaces with 42,000 to 154,000 BTUh (not all models have all sizes) gas input rates.

DESCRIPTION AND USAGE

This kit is designed for use in the furnaces listed in Table 2 or Table 3, see Table 1 for kit contents. To accommodate many different furnace models, more parts are shipped in kit than will be needed to complete conversion. When installation is complete, discard extra parts.

SINGLE-STAGE NON-CONDENSING FURNACES

Table 2 – Model Numbers Beginning with:

58S(T/P/C/B)	58DL	58PH	31(0/1/3)
8(0/1/2)0S	8(0/1/2)1S	PG8M(A/E)	PG8J(A/E)
PG80ES(A/L)	PG80MS(A/L)	(N/R)8MS	(F/G/N/R)8MX
N80VS	(N/R)80ES(N/L)	(N/R)80MS(N/L)	WF(M/E)(R/L)

TWO-STAGE & VARIABLE NON-CONDENSING FURNACES

Table 3 – Model Numbers Beginning with:

58CV	58CT	58T(N/P)	31(2/4/5)
82(0/1)T	88(0/1)T	PG8(M/J)V	PG80V
(F/G)8MT	(F/G)8MV	(F/G/N)80CTL	(F/G/N)80V
WFET			

INSTALLATION

⚠ WARNING

FIRE, EXPLOSION, ELECTRICAL SHOCK AND CARBON MONOXIDE POISONING HAZARD

Failure to follow instructions could result in personal injury, death or property damage.

Improper installation, adjustment, alteration, service, maintenance, or use can cause carbon monoxide poisoning, explosion, fire, electrical shock, or other conditions, which could result in personal injury or death. Consult your distributor or branch for information or assistance. The qualified installer or agency must use only factory-authorized kits or accessories when servicing this product.

⚠ WARNING

FIRE, EXPLOSION, ELECTRICAL SHOCK, AND CARBON MONOXIDE POISONING HAZARD

Failure to follow this warning could result in personal injury or death.

This conversion kit shall be installed by a qualified service agency in accordance with the manufacturer’s instructions and all applicable codes and requirements of the authority having jurisdiction. If the information in these instructions is not followed exactly, a fire, explosion, or production of carbon monoxide could result causing property damage, personal injury, or loss of life. The qualified service agency is responsible for the proper installation of this furnace with this kit. The installation is not proper and complete until the operation of the converted appliance is checked as specified in the manufacturer’s instructions supplied with the kit.

⚠ AVERTISSEMENT

LE FEU, L’EXPLOSION, CHOC ELECTRIQUE, ET MONOXYDE DE CARBONE EMPOISONNER

Cette trousse de conversion doit être installée par un servie d’entretien qualifié, selon les instructions du fabricant et selon toutes les exigences et tous les codes pertinents de l’autorité compétente. Assurezvous de bien suivre les instructions dans cette notice pour réduire au minimum le risque d’incendie, d’explosion ou la production de monoxyde de carbone pouvant causer des dommages matériels, de blessure ou la mort. Le service d’entretien qualifié est responsable de l’installation de cette trousse. L’installation n’est pas adéquate ni complète tant que le bon fonctionnement de l’appereil converti n’a pas été vérfié selon les instructions du fabricant fornies avec la trousse.

Manufacturer reserves the right to change, at any time, specifications and designs without notice and without obligations.

⚠ WARNING

FIRE, EXPLOSION, ELECTRICAL SHOCK HAZARD

Failure to follow this warning could result in personal injury, death or property damage.

Gas supply MUST be shut off before disconnecting electrical power and proceeding with conversion.

⚠ WARNING

FIRE, EXPLOSION, ELECTRICAL SHOCK HAZARD

Failure to follow this warning could result in personal injury, death or property damage.

Gas supply MUST be shut off before disconnecting electrical power and proceeding with conversion.

⚠ WARNING

ELECTRICAL SHOCK, FIRE OR EXPLOSION HAZARD

Failure to follow this warning could result in personal injury, death or property damage.

Before installing, modifying, or servicing system, main electrical disconnect switch must be in the OFF position and install a lockout tag. There may be more than one disconnect switch. Lock out and tag switch with a suitable warning label. Verify proper operation after servicing.

1. Set room thermostat to lowest setting or “OFF”.
2. Disconnect power at external disconnect, fuse or circuit breaker.
3. Turn off gas at external shut-off or gas meter.
4. Remove outer doors and set aside.
5. Turn electric switch on gas valve to OFF.

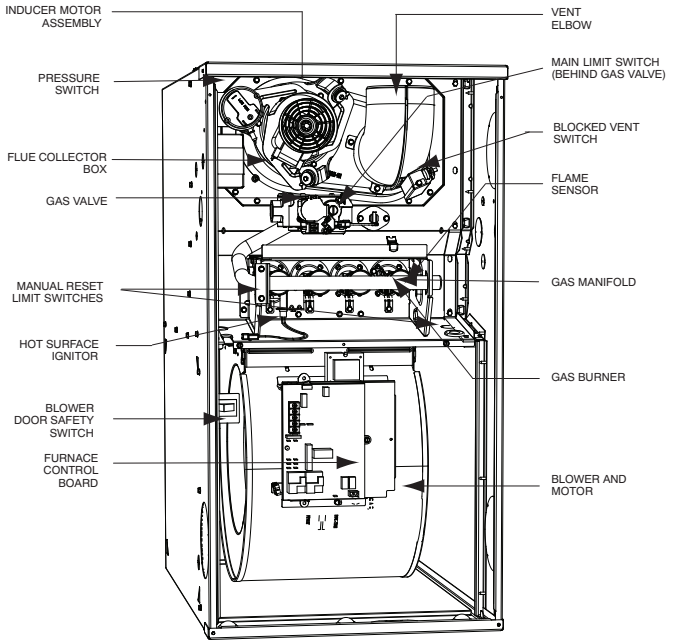

Representative drawing only, some models may vary in appearance.

Fig. 1 – Representative Furnace Drawing

MANIFOLD/ORIFICE/BURNER REMOVAL

⚠ CAUTION

UNIT OPERATION HAZARD

Failure to follow this caution may result in unit damage or improper operation.

Label all wires prior to disconnection when servicing controls.

⚠ ATTENTION

D’EQUIPEMENT D’OPERATION

Toute erreur de câblage peut être une source de danger et de panne.

Lors des opérations d’entretien des commandes, étiqueter tous les fils avant de les déconnecter.

NOTE: Use a back-up wrench on the gas valve to prevent the valve from rotating on the manifold or damaging the mounting to the burner box. See Fig. 2 and Fig. 3.

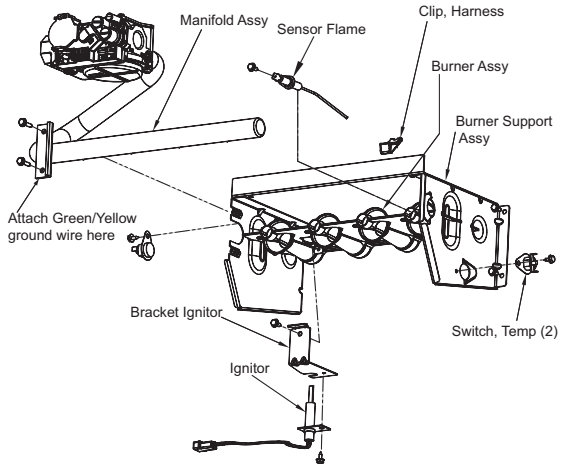

Fig. 2 – 80% Burner

1. Disconnect the gas pipe from gas valve and remove pipe from the furnace casing.
2. Disconnect the connector harness from gas valve. Disconnect wires from Hot Surface Igniter (HSI) and Flame Sensor.
3. Support the manifold and remove the 4 screws that secure the manifold assembly to the burner box and set aside.
4. Note the location of the green/yellow wire ground wire for re-assembly later.
5. Remove wires from both rollout switches.
6. Slide one-piece burner assembly out of slots on sides of burner box.
7. Remove the flame sensor from the burner assembly.
8. Remove the orifices from the manifold and discard.

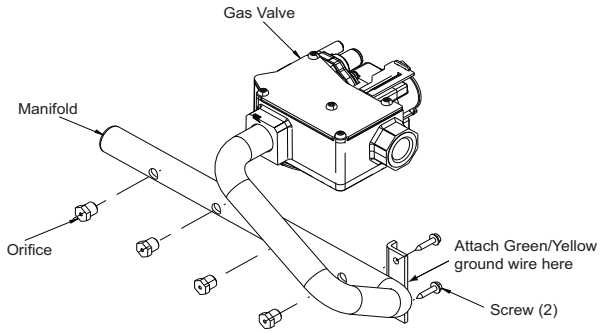

Fig. 3 – 80% Manifold

NOx DEVICE REMOVAL

⚠ CAUTION

UNIT DAMAGE HAZARD

Failure to follow this caution may result in unit damage.

Furnace MUST have low NOx devices removed prior to operating furnace on propane gas.

For NOx device removal, follow these additional steps:

1. Remove the screw underneath the heat exchanger inlet that secures the NOx device in the heat exchanger. (See Fig. 4)

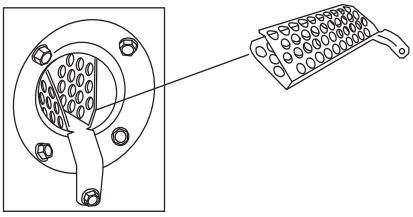

A02195

Fig. 4 – NOx Device Removal

2. Use a pair of needle nose pliers to remove the NOx device.
3. Squeeze the sides of the device, if necessary, to remove from the heat exchanger.
4. Re-install screw in hole underneath heat exchanger inlet.

NOTE: It is very IMPORTANT to reinstall the NOx bracket mounting screw.

5. Repeat steps for each heat exchanger.

ORIFICE SELECTION/DERATE

⚠ CAUTION

UNIT DAMAGE HAZARD

Failure to follow this caution may result in unit damage.

DO NOT re-drill burner orifices. Improper drilling may result in burrs, out-of-round holes, etc. Obtain new orifices if orifice size must be changed. (See Fig. 5)

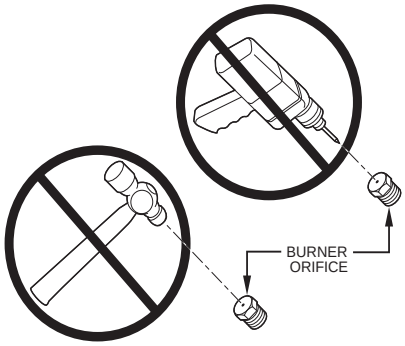

A93059

Fig. 5 – Burner Orifice

Refer to conversion kit rating plate 348709-201 or 348709-204 to determine main burner orifice size. (See Fig. 6)

Furnace gas input rate on furnace rating plate is for installations at altitudes up to 2000 ft.

In the U.S.A.; the input rating for altitudes above 2000 ft. must be reduced by 4 percent for each 1000 ft. above sea level.

In Canada, the input rating must be derated by 10 percent for altitudes of 2000 ft. to 4500 ft. above sea level.

The Conversion Kit Rating Plate accounts for high altitude derate.

Install main burner orifices. Do not use PTFE thread-seal tape. Finger-tighten orifices at least one full turn to prevent cross-threading, then tighten with wrench. There are enough orifices in each kit for largest furnace. Discard extra orifices.

SINGLE STAGE GAS VALVE

CONVERSION KIT RATING PLATE

THIS APPLIANCE HAS BEEN CONVERTED TO USE PROPANE GAS FOR FUEL. REFER TO KIT INSTRUCTIONS FOR CONVERSION PROCEDURES. USE PARTS SUPPLIED BY MANUFACTURER AND INSTALLED BY QUALIFIED PERSONNEL.
SEE EXISTING RATING PLATE FOR APPLIANCE MODEL NO. AND INPUT RATING.
NOTE: Furnace gas input rate on rating plate is for installations up to 2000 ft. (610m) above sea level. In U.S.A. the input rating for altitudes above 2000 ft. (610m) must be derated by 4% for each 1000 ft. (305m) above sea level. In Canada the input rating must be derated by 10% for altitudes of 2000 ft. (610m) to 4500 ft. (1372m) above sea level.

KIT NO.: AGAGC8NPS01C (SUPERSEDES: KGBNP50011SP, KGANP51012SP, KGCNP5201VSP, NAHD00901LP, NAHB01001LP, AGAGC8NPS01A, AGAGC8NPS01B)

FUEL USED: PROPANE GAS
INLET PRESSURE (min - max): 12.0 - 13.6 in. wc

APPLIANCE MODELS §		ALTITUDE OF INSTALLATION (FT. ABOVE SEA LEVEL) U.S.A. *								
		0 to 2000	2001 * to 3000	3001 to 4000	4001 to 5000	5001 to 6000	6001 to 7000	7001 to 8000	8001 to 9000	9001 to 10000
58S(T/P/C/B), 58DL, 58PH, 31(0/1/3), 8(0/1/2)0S, 8(0/1/2)1S, PG8M(A/E), PG8J(A/E), PG80ES(A/L), PG80MS(A/L), (N/R)8MS, (F/G/N/R)8MX, N80VS, (N/R)80ES(N/L), (N/R)80MS(N/L), WF(M/E)(R/L)	Orifice No.	55	1.30mm	1.30mm	1.25mm	1.25mm	1.25mm	56	56	56
		Manifold Pressure								
		11.0	11.0	10.5	11.0	11.0	10.5	11.0	11.0	10.5

* For Canadian Installations from 2000 to 4500 ft. (610m to 1373m) use U.S.A. column 2001 to 3000 ft. (611m to 914m).
§ THIS KIT IS FOR 45K THROUGH 155K INPUT MODELS ONLY

348709-201 REV.-

A221043

TWO STAGE GAS VALVE

CONVERSION KIT RATING PLATE

THIS APPLIANCE HAS BEEN CONVERTED TO USE PROPANE GAS FOR FUEL. REFER TO KIT INSTRUCTIONS FOR CONVERSION PROCEDURES. USE PARTS SUPPLIED BY MANUFACTURER AND INSTALLED BY QUALIFIED PERSONNEL. SEE EXISTING RATING PLATE FOR APPLIANCE MODEL NO. AND INPUT RATING.

NOTE: Furnace gas input rate on rating plate is for installations up to 2000 ft. (610m) above sea level. In U.S.A. the input rating for altitudes above 2000 ft. (610m) must be derated by 4% for each 1000 ft. (305m) above sea level. In Canada the input rating must be derated by 10% for altitudes of 2000 ft. (610m) to 4500 ft. (1372m) above sea level.

KIT NO.: AGAGC8NPS01C (SUPERSEDES: KGBNP50011SP, KGANP51012SP, KGCNP5201VSP, NAHD00901LP, NAHB01001LP, AGAGC8NPS01A, AGAGC8NPS01B)

FUEL USED: PROPANE GAS
INLET PRESSURE (min - max): 12.0 - 13.6 in. wc

APPLIANCE MODELS §		ALTITUDE OF INSTALLATION (FT. ABOVE SEA LEVEL) U.S.A. *								
		0 to 2000	2001 * to 3000	3001 to 4000	4001 to 5000	5001 to 6000	6001 to 7000	7001 to 8000	8001 to 9000	9001 to 10000
58CV, 58CT, 58T(N/P), 31(2/4/5), 82(0/1)T, 88(0/1)T, PG8(M/J)V, PG80V, (F/G)8MT, (F/G)8MV, (F/G/N)80CTL, (F/G/N)80V, WFET	Orifice No.	55	1.30mm	1.30mm	1.25mm	1.25mm	1.25mm	56	56	56
		Manifold Pressure								
	HIGH	11.0	11.0	10.5	11.0	11.0	10.5	11.0	11.0	10.5
	LOW	5.8	5.3	5.0	5.5	5.2	4.9	5.7	5.2	4.8

* For Canadian Installations from 2000 to 4500 ft. (610m to 1373m) use U.S.A. column 2001 to 3000 ft. (611m to 914m).
§ THIS KIT IS FOR 45K THROUGH 155K INPUT MODELS ONLY

348709-204 REV.-

A221044

Fig. 6 – Conversion Kit Rating Plate

INSTALL ORIFICES

1. Install main burner orifices. Do not use PTFE thread-seal tape. Finger-tighten orifices at least one full turn to prevent cross-threading, then tighten with wrench.
2. There are enough orifices in each kit for largest furnace. Discard extra orifices.

NOTE: DO NOT reinstall the manifold at this time.

INSTALL MIXER SCREWS

NOTE: There are two sets of mixer screws. One set is for Condensing gas furnaces, the other set is for Non-condensing gas furnaces. Use only the parts in the bag marked "REQUIRED FOR THE CONVERSION OF NON-CONDENSING GAS FURNACES TO PROPANE GAS"

See Fig. 7 to verify you have the correct set of mixer screws.

1. Locate the dimple on each burner venturi tube. If you cannot locate the dimple, refer to Fig. 8 for location of the mixer screw.
2. Drill a 5/64-in. (2.8 mm) hole (supplied in kit) in each dimple.
3. Install a mixer screw in each drilled hole drilling as straight as possible. The screw head should be flush with the top of the burner venturi.

337932-702

PART #	CONTAINS: DESCRIPTION	QTY
328456-401	BIT, DRILL	1
327593-401	SCREW	7

REQUIRED FOR CONVERSION OF NON CONDENSING GAS FURNACE TO PROPANE GAS.

A11397

Fig. 7 – Gas Conversion Kit

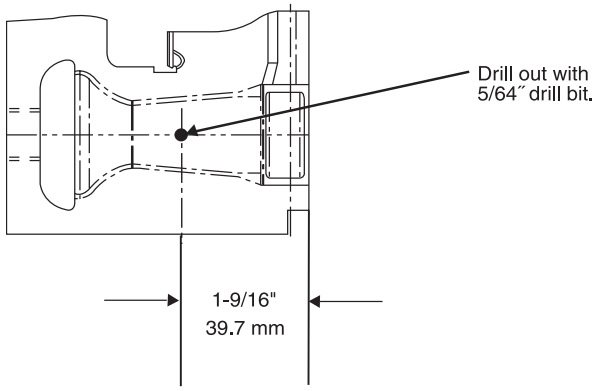

A06432

Fig. 8 – Mixer Screw Location

REINSTALL BURNER ASSEMBLY

To reinstall burner assembly:

1. Attach flame sensor to burner assembly.
2. Install HSI and bracket to burner assembly.
3. Insert one-piece burner in slot on sides of burner box and slide burner back in place.
4. Reattach HSI wires to HSI.
5. Verify igniter to burner alignment.
6. For Silicon Nitride igniters, see Fig. 9.
7. Re-attach Flame sensor wire to Flame Sensor.

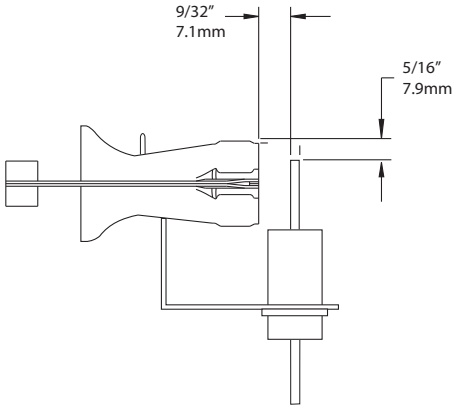

A05025

Fig. 9 – Igniter Position - Side View

CONVERT GAS VALVE

⚠ CAUTION

UNIT DAMAGE HAZARD

Failure to follow this caution may result in unit damage

The gas valve must be converted and pre-adjusted before operating on propane gas. If not converted and pre-adjusted, sooting and corrosion will occur leading to early heat exchanger failure.

⚠ WARNING

FIRE, EXPLOSION, ELECTRICAL SHOCK HAZARD

Failure to follow this warning could result in personal injury, death or property damage.

Gas supply MUST be shut off before disconnecting electrical power and proceeding with conversion.

⚠ WARNING

ELECTRICAL SHOCK, FIRE OR EXPLOSION HAZARD

Failure to follow this warning could result in personal injury, death or property damage.

Before installing, modifying, or servicing system, main electrical disconnect switch must be in the OFF position and install a lockout tag. There may be more than one disconnect switch. Lock out and tag switch with a suitable warning label. Verify proper operation after servicing.

Single Stage Gas Valve

1. Refer to Fig. 10.
2. Be sure gas and electrical supplies to furnace are off.
3. Remove caps that conceal adjustment screws for the gas valve regulators. (See Fig. 10)
4. Remove the regulator adjustment screw.
5. Remove the regulator springs (silver).
6. Install the propane gas regulator springs (white).
7. Install the regulator adjustment screws.
8. Turn the adjusting screw clockwise (in) 8.5 full turns. This will increase the manifold pressure closer to the propane set point. (See Fig. 10)
9. Do not install regulator seal caps at this time.

Gas Valve (Single Stage)

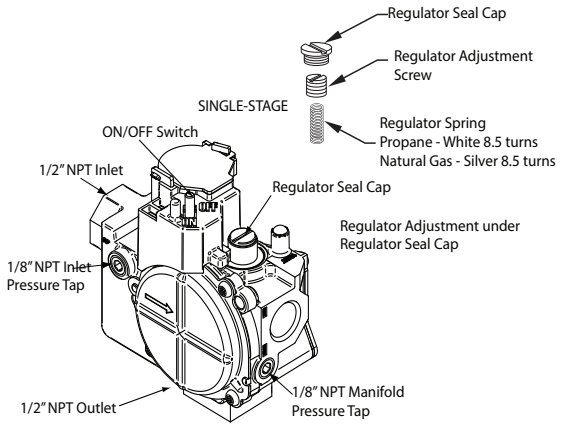

A190068

Redundant Auto Gas Valve

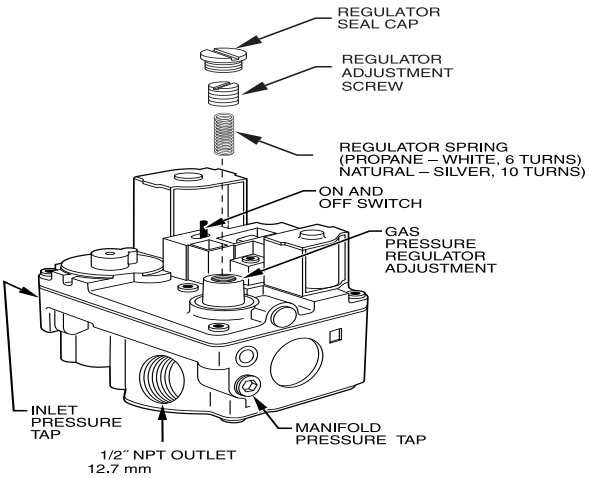

A05071

Fig. 10 – Single Stage Gas Valve

Two Stage Gas Valve

NOTE: For older model 2-stage furnaces with a Series E gas valve (see Fig. 11), they DO NOT need to have the regulator springs replaced in the gas valve, but the regulators in the gas valve must be pre-adjusted for propane applications.

Two Stage E Valve

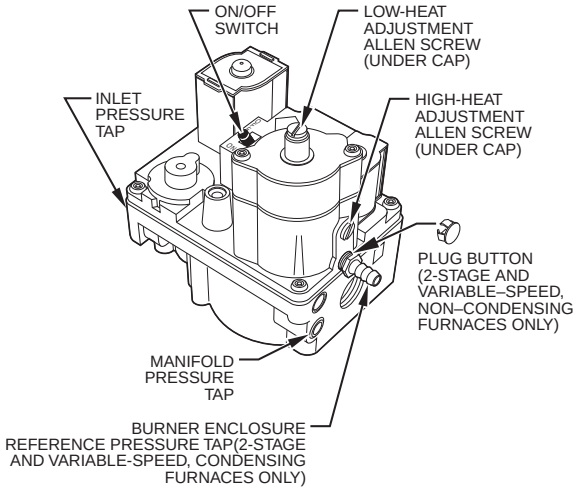

A01069

Two Stage Valve

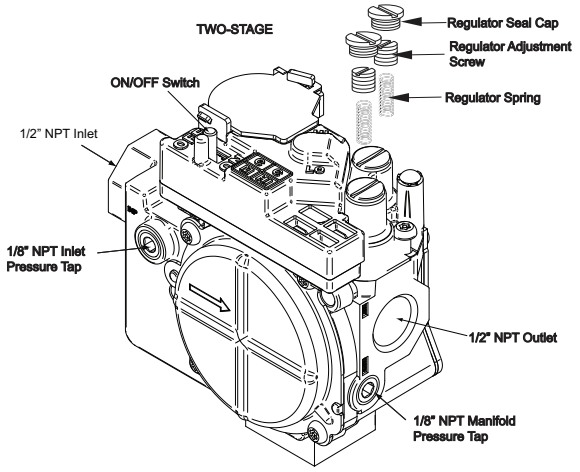

A11472

Fig. 11 – Two Stage Gas Valve

For E valves see Fig. 11.

1. Be sure gas and electrical supplies to furnace are off.
2. Remove caps that conceal adjustment screws for high- and low-heat stage gas valve regulators. See Fig. 10.
3. Turn low-heat stage adjusting screw (3/32-in. [2 mm] hex Allen screw) clockwise (in) 1 full turn. This will increase the manifold pressure closer to the propane low-heat set point.
4. Turn high-heat stage adjusting screw (3/32-in. [2 mm] hex Allen screw) clockwise (in) 2 full turns. This will increase the manifold pressure closer to the propane high-heat set point.
5. Do not install regulator seal caps at this time.

For all other gas valves see Fig. 11.

1. Be sure main gas and electrical supplies are turned OFF.
2. Remove both regulator seal caps. (See Fig. 11)
3. Remove both regulator adjustment screws.
4. Remove both natural gas regulator springs (silver).
5. Install propane gas regulator springs (white).
6. Install regulator adjustment screws.

7. Turn low-heat stage adjusting screw clockwise (inwards) 9.5 turns. This will increase the manifold pressure closer to the low-heat set point.
8. Turn high-heat stage adjusting screw clockwise (inwards) 13.5 turns. This will increase the manifold pressure closer to the high-heat set point.
9. Do not install regulator seal caps at this time.

NOTE: For the two-stage furnaces (see Fig. 11), they MUST have both regulator springs replaced and the gas valve MUST be pre-adjusted.

INSTALL MANIFOLD

1. Align the orifices in the manifold assembly with the support rings on the end of the burner.
2. Insert the orifices in the support rings of the burners. Manifold mounting tabs should fit flush against the burner box.

NOTE: If manifold does not fit flush against the burner box, the burners are not fully seated forward. Remove the manifold and check burner positioning in the burner box assembly.

3. Attach the green/yellow wire and ground terminal to one of the manifold mounting screws.
4. Install the remaining manifold mounting screws.
5. Connect the wires to the flame sensor and hot surface igniter.
6. Connect the wires to both rollout switches.
7. Connect the connector harness to gas valve.

NOTE: Use only propane-resistant pipe dope. Do not use PTFE thread-seal tape.

8. Insert the gas pipe through the grommet in the casing. Apply a thin layer of pipe dope to the threads of the pipe and thread the pipe into the gas valve.

NOTE: Use a back-up wrench on the gas valve to prevent the valve from rotating on the manifold or damaging the mounting to the burner box.

9. With a back-up wrench on the inlet boss of the gas valve, finish tightening the gas pipe to the gas valve.
10. Turn gas on at electric switch on gas valve.

INSTALL LOW GAS PRESSURE SWITCH

⚠ WARNING

FIRE, EXPLOSION, ELECTRICAL SHOCK HAZARD

Failure to follow this warning could result in personal injury, death or property damage.

Gas supply MUST be shut off before disconnecting electrical power and proceeding with conversion.

⚠ WARNING

ELECTRICAL SHOCK, FIRE OR EXPLOSION HAZARD

Failure to follow this warning could result in personal injury, death or property damage.

Before installing, modifying, or servicing system, main electrical disconnect switch must be in the OFF position and install a lockout tag. There may be more than one disconnect switch. Lock out and tag switch with a suitable warning label. Verify proper operation after servicing.

NOTE: Use propane-resistant pipe dope on all connections to prevent gas leaks. DO NOT use PTFE thread-seal tape.

1. Be sure main gas and electric supplies to furnace are off.
2. Remove 1/8-in. (3 mm) pipe plug from inlet pressure tap on gas valve. DO NOT DISCARD 1/8-in. (3 mm) PLUG.
3. Apply pipe dope sparingly to the 1/8-in. (3 mm) x 2-in. (50.8 mm) brass nipple and install the doped end in 1/8-in. (3 mm) tapped opening in gas valve inlet pressure-tap. Tighten fitting with a small wrench.
4. Apply pipe dope sparingly to the opposite end of the 1/8-in. (3 mm) x 2-in. (50.8 mm) brass coupling. Install the female end of the female x female x male tee on the brass coupling.
5. Tighten tee finger tight. Use a small open-end wrench for final tightening. The male end of the tee should be facing you.
6. Apply pipe dope sparingly to the end of brass tee.
7. Install propane low gas pressure switch on male end of the female x female x male tee.
8. Tighten switch finger tight.
9. Use a small open-end wrench on base of pressure switch for final tightening. The contacts of the LGPS should be pointing toward the inducer motor when complete.
10. The remaining opening on the brass street tee is the new gas valve inlet pressure tap
11. Install manometer fitting to the open end of the brass street tee. Or if installation is to be completed later, apply pipe dope to inlet pressure plug from gas valve install in open end of brass street tee.
12. Check all fittings for leaks after gas supply has been turned on.

⚠ WARNING

FIRE AND EXPLOSION HAZARD

Failure to follow this warning could result in personal injury and/or death.

NEVER test for gas leaks with an open flame. Use a commercially available soap solution made specifically for the detection of leaks to check all connections. A fire or explosion may result causing property damage, personal injury or loss of life.

⚠ AVERTISSEMENT

RISQUE D'EXPLOSION ET D'INCENDIE

Le fait de ne pas suivre cet avertissement pourrait entraîner des dommages corporels et / ou la mort.

Ne jamais examiner pour les fuites de gaz avec une flamme vive. Utilisez plutôt un savon fait specifiquement pour la détection des fuites de gaz pour verifier tous les connections. Un incendie ou une explosion peut entrainer des dommages matériels, des blessures ou la mort.

MODIFY PRESSURE SWITCH WIRING

⚠ CAUTION

UNIT OPERATION HAZARD

Failure to follow this caution may result in unit damage or improper operation.

Label all wires prior to disconnection when servicing controls.

⚠ ATTENTION

D'EQUIPEMENT D'OPERATION

Toute erreur de câblage peut être une source de danger et de panne.

Lors des opérations d'entretien des commandes, étiqueter tous les fils avant de les déconnecter.

1. Locate the orange wire in the kit with an insulated straight female spade terminal and an insulated straight male terminal on the other end.
2. Connect the female terminal to a terminal on the Low Gas Pressure Switch.
3. Locate the orange wire in the kit with an insulated straight female spade terminal and an insulated female flag terminal on the other end.
4. Connect both straight female terminals of the orange wires to the terminals on the Low Gas Pressure Switch.
5. Disconnect orange wire from low-heat pressure switch LPS on inducer housing.
6. Connect the orange wire from the Low Heat Pressure Switch to the orange wire with the insulated male spade terminal.
7. Connect the orange wire from the Low Gas Pressure Switch to the terminal on the Low Heat Pressure Switch.
8. Route orange wires along wire harness. If possible, secure with wire tie provided in kit. Refer to furnace wiring diagram.

Single Stage Gas Valve

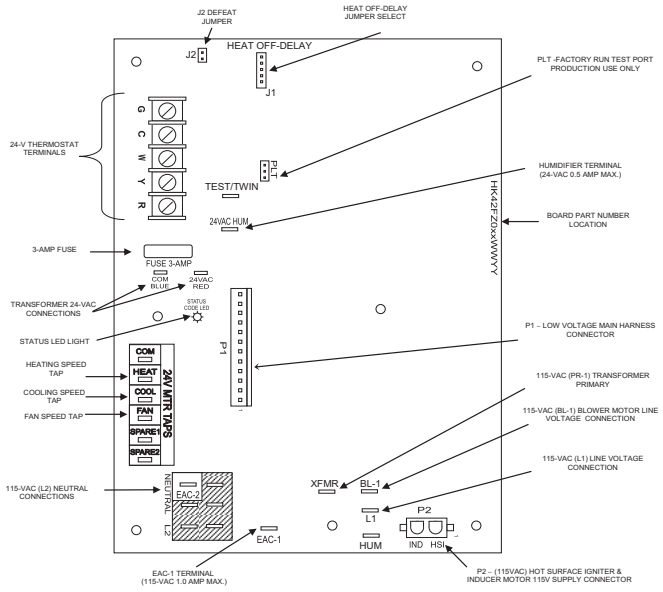

Representative drawing only, some models may vary in appearance.

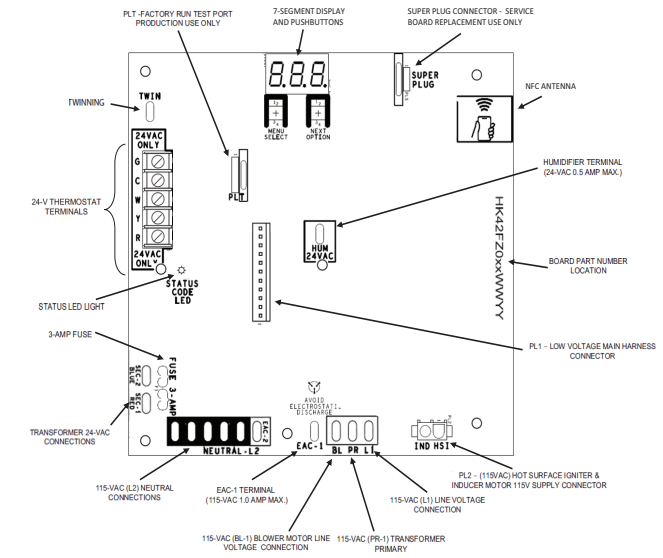

Representative drawing only, some models may vary in appearance.

Fig. 12 – Example of Single Stage Furnace Control

1. Jumper R-W thermostat connections on control.
2. When main burners ignite, confirm inlet gas pressure is between 12.0-in. w.c. and 13.6-in. w.c.
3. Remove jumper across R-W thermostat connections to terminate call for heat.
4. Turn furnace gas valve switch to OFF position.
5. Turn gas supply manual shutoff valve to OFF position.
6. Turn off furnace power supply.
7. Remove manometer and on some models remove pressure tap fitting.
8. Apply pipe dope sparingly to end of inlet gas pipe plug and install into unused end of 1/8-in. (3 mm) tee. Use a small back-up wrench on tee when tightening gas inlet pipe plug. (See Fig. 10)

Two-Stage Gas Valve

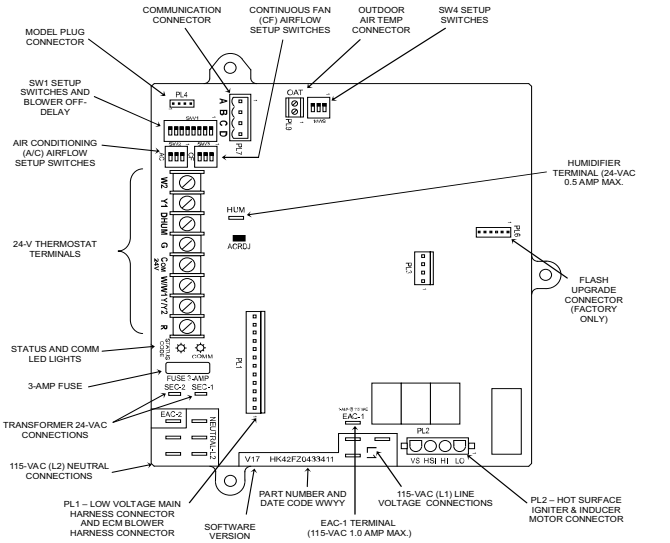

Representative drawing only, some models may vary in appearance.

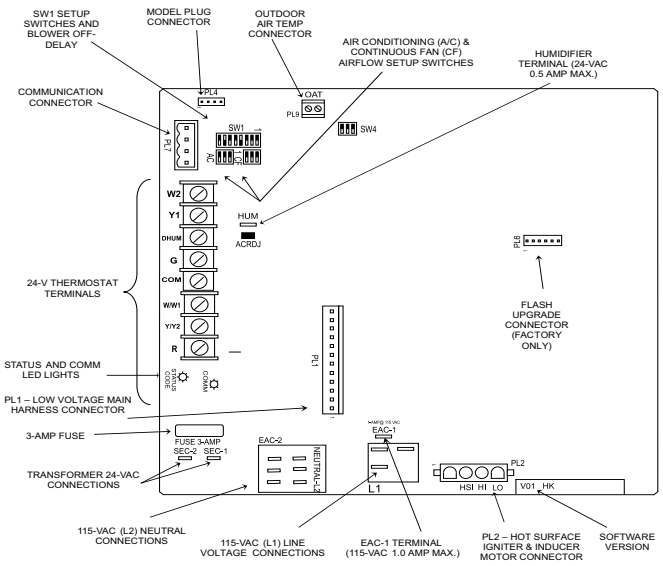

Representative drawing only, some models may vary in appearance.

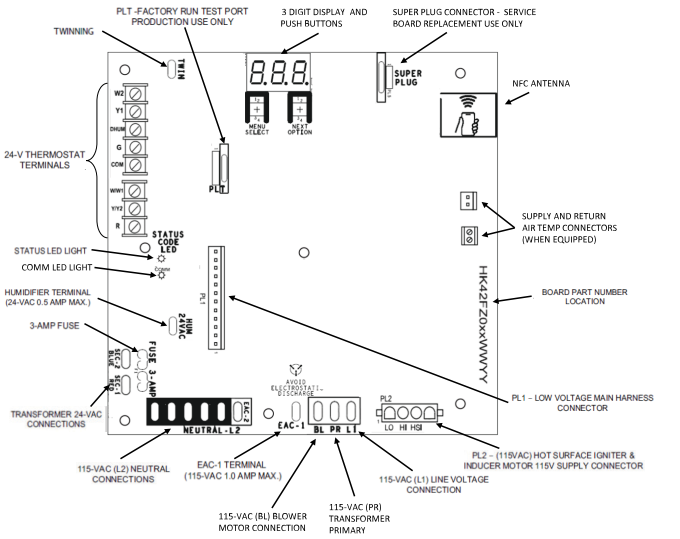

Representative drawing only, some models may vary in appearance.

Fig. 13 – Example of Two-Stage Speed Furnace Control for VCA or VCT Blower Motor

⚠ CAUTION

ELECTRICAL SHOCK HAZARD

Failure to follow this warning could result in personal injury, or death.

Blower access door switch removes 115-V power to control. No component operation can occur unless switch is closed. Caution must be taken when manually closing this switch for service purposes.

Do not tape or permanently allow the door switch to be bypassed. Temporarily depress the door switch with one hand while accessing the service buttons with your other hand. Do not touch uninsulated electrical components.

1. Enable two-stage thermostat on furnace control by:
   a. Furnace controls with DIP switches, turn SW1-2 on furnace control ON, see Fig. 13.
   b. Furnace controls with 3 digit display, navigate to (HtE) and select (2St), see Fig. 13. See furnace installation manual for additional instructions.
2. Jumper R-W/W1 and R-W2 thermostat connections on control.
3. When main burners ignite, confirm inlet gas pressure is between 12.0-in. w.c. and 13.6-in. w.c.
4. Remove jumper across R-W/W1 and R-W2 thermostat connections to terminate call for heat.
5. Turn furnace gas valve switch to OFF position.
6. Turn gas supply manual shutoff valve to OFF position.
7. Turn off furnace power supply.
8. Remove manometer and on some models remove pressure tap fitting.
9. Apply pipe dope sparingly to the end of inlet gas pipe plug and install into unused end of 1/8-in. (3 mm) tee. Use a small back-up wrench on tee when tightening gas inlet pipe plug. (See Fig. 10)

Fixed-Speed Blower (FCT), Two-Stage Gas Valve

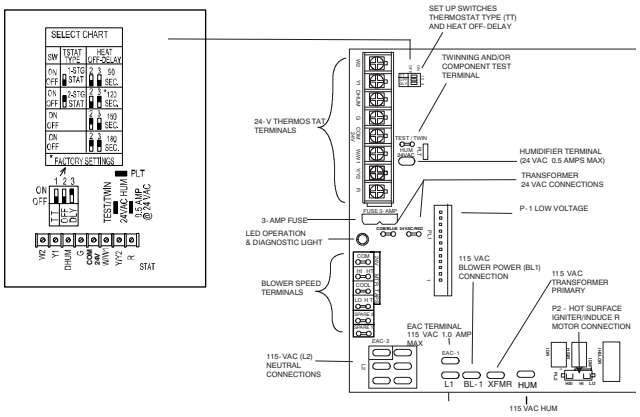

Representative drawing only, some models may vary in appearance.

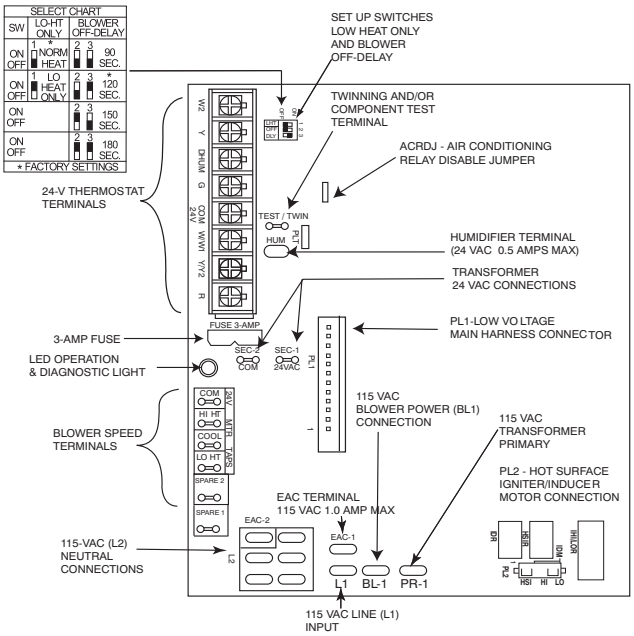

Representative drawing only, some models may vary in appearance.

Fig. 14 – Example of PSC or Discrete Tap Two-Stage Furnace Control

1. Turn Setup Switch SW1 (LHT or TT) on furnace control ON (see Fig. 14).
2. Jumper R-W/W1 and R-W2 thermostat connections on control.
3. When main burners ignite, confirm inlet gas pressure is between 12.0-in. w.c. and 13.6-in. w.c.
4. Remove jumper across R-W/W1 and R-W2 thermostat connections to terminate call for heat.
5. Turn furnace gas valve switch to OFF position.
6. Turn gas supply manual shutoff valve to OFF position.
7. Turn off furnace power supply.
8. Remove manometer and on some models remove pressure tap fitting.
9. Apply pipe dope sparingly to the end of inlet gas pipe plug and install into unused end of 1/8-in. (3 mm) tee. Use a small back-up wrench on tee when tightening gas inlet pipe plug. (See Fig. 10)

CHECK INLET GAS PRESSURE

⚠ CAUTION

UNIT DAMAGE HAZARD

Failure to follow this caution may result in unit damage.

DO NOT operate furnace more than one minute to check inlet gas pressure, as conversion is not complete at this time.

NOTE: This kit is to be used only when inlet gas pressure is between 12.0-in. w.c. and 13.6-in. w.c.

1. Verify manometer is connected to inlet pressure tap on gas valve.
2. Turn on furnace power supply.
3. Turn gas supply manual shutoff valve to ON position.
4. Turn furnace gas valve switch to ON position.
5. Turn Setup Switch SW1-2 on furnace control ON (see Fig. 13).
6. For single-stage jumper R-W thermostat connections on control.
   For two-stage jumper R-W/W1 and R-W2 thermostat connections on control.
7. When main burners ignite, confirm inlet gas pressure is between 12.0-in. w.c. and 13.6-in. w.c.
8. For single-stage remove jumper R-W thermostat connections on control to terminate call for heat.
   For two-stage remove jumper R-W/W1 and R-W2 thermostat connections on control to terminate call for heat.
9. Turn furnace gas valve switch to OFF position.
10. Turn gas supply manual shutoff valve to OFF position.
11. Turn off furnace power supply.
12. Remove manometer.
13. Apply pipe dope sparingly to the end of inlet gas pipe plug and install into unused end of 1/8-in. (3 mm) tee. Use a small back-up wrench on tee when tightening gas inlet pipe plug. (See Fig. 15)

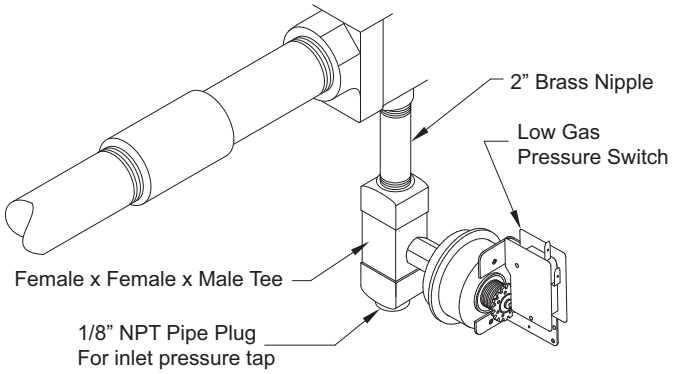

Fig. 15 – 80% Low Gas Pressure Switch

CHECK FURNACE AND MAKE ADJUSTMENTS

⚠ WARNING

FIRE AND EXPLOSION HAZARD

Failure to follow this warning could result in personal injury and/or death.

NEVER test for gas leaks with an open flame. Use a commercially available soap solution made specifically for the detection of leaks to check all connections. A fire or explosion may result causing property damage, personal injury or loss of life.

⚠ AVERTISSEMENT

RISQUE D’EXPLOSION ET D’INCENDIE

Le fait de ne pas suivre cet avertissement pourrait entraîner des dommages corporels et / ou la mort.

Ne jamais examiner pour les fuites de gaz avec une flamme vive. Utilisez plutôt un savon fait specifiquement pour la détection des fuites de gaz pour verifier tous les connections. Un incendie ou une explosion peut entrainer des dommages matériels, des blessures ou la mort.

⚠ WARNING

FIRE, EXPLOSION, ELECTRICAL SHOCK HAZARD

Failure to follow this warning could result in personal injury, death or property damage.

Gas supply MUST be shut off before disconnecting electrical power and proceeding with conversion.

⚠ WARNING

ELECTRICAL SHOCK, FIRE OR EXPLOSION HAZARD

Failure to follow this warning could result in personal injury, death or property damage.

Before installing, modifying, or servicing system, main electrical disconnect switch must be in the OFF position and install a lockout tag. There may be more than one disconnect switch. Lock out and tag switch with a suitable warning label. Verify proper operation after servicing.

1. Be sure main gas and electric supplies to furnace are off.
2. Remove 1/8-in. (3 mm) pipe plug from manifold pressure tap on downstream side of gas valve.
3. Attach manometer to manifold pressure tap on gas valve.
4. Turn gas supply manual shutoff valve to ON position.
5. Turn furnace gas valve switch to ON position.
6. Check all threaded pipe connections for gas leaks.
7. Turn on furnace power supply.

GAS INPUT RATE INFORMATION

The gas input rate for propane is the same as for natural gas. See furnace rating plate for input rate. The input rate for propane is determined by manifold pressure and orifice size.

The gas valve must be set for Low Heat first and then set for High Heat on two-stage and variable-speed furnaces. Furnace gas input rate on rating plate is for installations at altitudes up to 2000 ft. (610 M).

In the U.S.A., the input rating for altitudes above 2000 ft. (610 M) must be reduced by 4 percent for each 1000 ft. (305 M) above sea level.

In Canada, the input rating must be derated by 10 percent for altitudes of 2000 ft. (610 M) to 4500 ft. (1372 M) above sea level.

The Conversion Kit Rating Plate accounts for high altitude derate.

SET GAS INPUT RATE

Single-Stage Gas Valve

1. Jumper R and W thermostat connections to call for heat. (See Fig. 12)
2. Check manifold orifices for gas leaks when main burners ignite.
3. Adjust gas manifold pressure. (Refer to conversion kit rating plate 348709-201.
4. Remove cap that conceals gas valve regulator adjustment screw.

5. Turn adjusting screw counterclockwise (out) to decrease manifold pressure or clockwise (in) to increase manifold pressure.
6. Replace gas valve regulator seal cap.
7. Verify manifold pressure is correct.

NOTE: Gas valve regulator seal cap MUST be in place when checking input rate. When correct input is obtained, main burner flame should be clear blue, almost transparent (See Fig. 16). Be sure regulator seal cap is in place when finished.

8. Remove jumper across R and W thermostat connections to terminate call for heat.
9. Turn furnace gas valve control switch or control knob to OFF position.
10. Turn off furnace power supply.
11. Remove manometer and on some models remove pressure tap fitting.
12. Turn furnace gas-valve switch to ON position.
13. Turn on furnace power supply.
14. Set room thermostat to call for heat.
15. Check pressure tap plug for gas leaks when main burners ignite.
16. Check for correct burner flame.
17. After making the required manifold pressure adjustments, check and adjust the furnace temperature rise per the furnace installation instructions.

Fixed-Speed Blower (FCT), Two-Stage Gas Valve

1. Verify SW1 (LHT or TT) on furnace control is turned “ON”. (See Fig. 14)
2. Jumper R and W/W1 thermostat connections to call for heat.
3. Check manifold orifices for gas leaks when main burners ignite.
4. Adjust gas manifold pressure.
5. Remove caps that conceal adjustment screws for gas valve regulators. (See Fig. 10)
6. Adjust low heat input rate manifold pressure for propane gas.
7. Turn low heat adjusting screw counterclockwise (out) to decrease input rate or clockwise (in) to increase input rate.
8. When correct input is obtained, main burner flame should be clear blue, almost transparent. (See Fig. 16)
9. Jumper R and W/W1 and W2 on control center thermostat connections. This keeps furnace locked in high heat operation.
10. Adjust high heat input rate manifold pressure for propane gas.
11. Turn high heat adjusting screw counterclockwise (out) to decrease input rate or clockwise (in) to increase input rate.
12. Replace caps that conceal gas valve regulator adjustment screws.
13. When correct input is obtained, main burner flame should be clear blue, almost transparent. (See Fig. 16)
14. Remove jumper across R, W1, and W2 after high heat adjustment to terminate call for heat.
15. Turn setup switch SW1 (TT) on furnace control to OFF position.
16. Turn furnace gas-valve switch to OFF position.
17. Turn off furnace power supply.
18. Remove manometer from the manifold pressure tap of the gas valve.
19. Turn on furnace power supply.
20. Set room thermostat to call for heat.
21. Check pressure tap plug for gas leaks when main burners ignite.
22. Check for correct burner flame.
23. After making the required manifold pressure adjustments, check and adjust the furnace temperature rise per the furnace installation instructions.

Two-Stage Gas Valve

⚠ CAUTION

ELECTRICAL SHOCK HAZARD

Failure to follow this warning could result in personal injury, or death.

Blower access door switch removes 115-V power to control. No component operation can occur unless switch is closed. Caution must be taken when manually closing this switch for service purposes.

Do not tape or permanently allow the door switch to be bypassed. Temporarily depress the door switch with one hand while accessing the service buttons with your other hand. Do not touch uninsulated electrical components.

1. Enable two-stage thermostat on furnace control by:
   a. Furnace controls with DIP switches, turn SW1-2 on furnace control ON.
   b. Furnace controls with 3 digit display, navigate to (Htt) and select (2St). See furnace installation manual for additional instructions.
2. Jumper R and W/W1 thermostat connections to call for heat.
3. Check manifold orifices for gas leaks when main burners ignite.
4. Adjust gas manifold pressure. (Refer to conversion kit rating plate 348709-204.
5. Remove caps that conceal adjustment screws for gas valve regulators. (See Fig. 11)

Adjust low-heat manifold pressure for propane gas. (See Fig. 11)

6. Turn low-heat adjusting screw counterclockwise (out) to decrease input rate or clockwise (in) to increase input rate.

NOTE: When correct input is obtained, main burner flame should be clear blue, almost transparent. (See Fig. 16).

7. Jumper R, W/W1 and W2 on control center thermostat connections. This keeps furnace locked in high-heat operation.
8. Adjust high-heat manifold pressure for propane gas.
9. Turn high-heat adjusting screw counterclockwise (out) to decrease input rate or clockwise (in) to increase input rate.
10. Replace caps that conceal gas valve regulator adjustment screws.

NOTE: When correct input is obtained, main burner flame should be clear blue, almost transparent. (See Fig. 16)

11. Remove jumper across R, W1, and W2 after high-heat adjustment to terminate call for heat.
12. Return thermostat type setting back to its desired setting based on your thermostat:
    a. Furnace controls with DIP switches, turn SW1-2 on furnace control ON for a two-stage Thermostat, OFF for a single-stage Thermostat, see Fig. 22.
    b. Furnace controls with 3 digit display, navigate to (Htt) and select (2St) for a two-stage thermostat or select (1St) for ad single-stage thermostat. See furnace installation manual for additional instructions.
13. Turn furnace gas valve switch to OFF position.
14. Turn off furnace power supply.
15. Remove manometer and re-install manifold pressure tap plug.
16. Turn furnace gas valve switch to ON position.
17. Turn on furnace power supply.
18. Set room thermostat to call for heat.
19. Check pressure tap plug for gas leaks when main burners ignite.
20. Check for correct burner flame.
21. Observe unit operation through two complete heating cycles.

22. See Sequence of Operation in furnace Installation, Start-Up, and Operating Instructions.
23. Set room thermostat to desired temperature.

After making the required manifold pressure adjustments, check and adjust the furnace temperature rise per the furnace installation instructions.

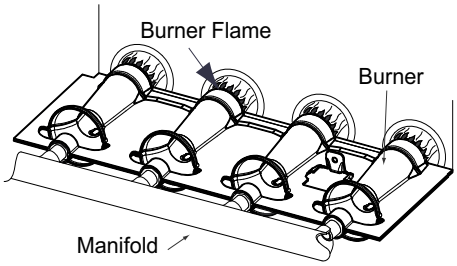

A11461

Fig. 16 – Burner Flame

CHECK LOW GAS PRESSURE SWITCH

The newly installed low gas pressure switch is a safety device used to guard against adverse burner operating characteristics that can result from low gas supply pressure. Switch opens at not less than 6.5 in. w.c. and closes at not greater than 10.2 in. w.c.

This switch also prevents operation when the propane tank level is low which can result in gas with a high concentration of impurities, additives, and residues that have settled to the bottom of the tank. Operation under these conditions can cause harm to the heat exchanger system. This normally open switch closes when gas is supplied to gas valve under normal operating pressure. The closed switch completes control circuit. Should an interruption or reduction in gas supply occur, the gas pressure at switch drops below low gas pressure switch setting, and switch opens. Any interruption in control circuit (in which low gas pressure switch is wired) quickly closes gas valve and stops gas flow to burners. When normal gas pressure is restored, the system must be electrically reset to re-establish normal heating operation.

Before leaving installation, observe unit operation through two complete heating cycles. During this time, turn gas supply to gas valve off just long enough to completely extinguish burner flame, then instantly restore full gas supply. To ensure proper low gas pressure switch operation, observe that there is no gas supply to burners until after hot surface igniter begins glowing.

LABEL APPLICATION

1. Fill in Conversion Responsibility Label 348709-205 and apply to Blower Access Door of furnace. Date, name, and address of organization making this conversion are required. (See Fig. 17)
2. Attach Conversion Rating Plate Label 348709-201 or 348709-204 to outer door of furnace. (See Fig. 6)
3. Apply Gas Control Conversion Label: Use Gas Control Conversion Label 348709-202 (See Fig. 18) Do not use 348709-203 which is similar.
4. Replace control access door, blower access door and outer door of furnace.

CHECKOUT

1. Observe unit operation through two complete heating cycles.
2. See Sequence of Operation in furnace Installation, Start- Up, and Operating Instructions.
3. Set room thermostat to desired temperature.

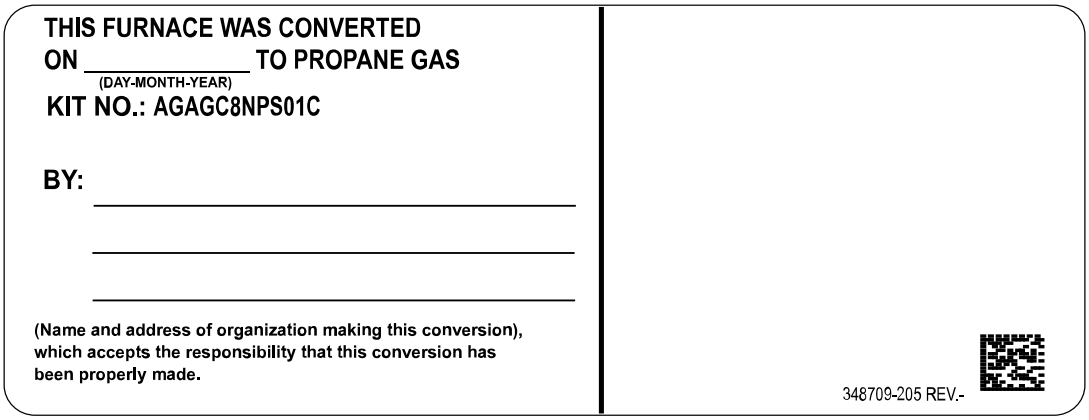

A221045

Fig. 17 – Gas Conversion Responsibility Label

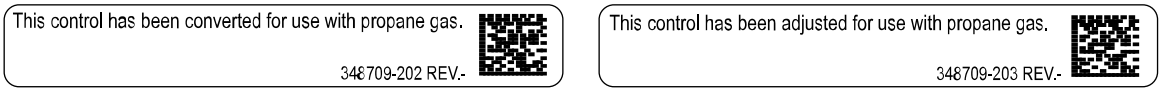

A221046

Fig. 18 – Gas Conversion Label

© 2022 Carrier. All rights reserved.

Manufacturer reserves the right to change, at any time, specifications and designs without notice and without obligations.