Submittal Sheet

ATMOSPHERE

VTX Series
Inline Centrifugal Fans

Standard Features

- *Brackets included for wall or ceiling mount*
- *Permanently lubricated sealed bearings*
- *External rotor motor with automatic reset thermal overload protection*
- *Suitable for airstream temperatures up to 140°F (60°C)*
- *10 year manufacturers warranty*
- *ETL Listed*
- *4" to 12" duct diameters*
- *From 198 to 1124 CFM*
- *Aerodynamic design allowing more air flow*
- *100% speed controllable easing air flow adjustment*
- *Prewired with 120V power cord*
- *AMCA Air Listed (Pending AMCA certification)*

VTX Series Dimensional Data

Fan Model	A	B	C	D	Ship Wt	Metal Gauge
VTX400	4.0	8.5	9.5	1.0	8.6	18
VTX600L	5.0	8.5	9.5	1.0	8.4	18
VTX600	6.0	10.5	13.0	1.0	13.8	18
VTX800L	8.0	10.5	13.0	1.0	15.0	18
VTX800	8.0	10.5	13.0	1.0	15.0	18
VTX1000	10.0	10.5	13.0	1.0	15.2	18
VTX1200L	12.0	12.3	16.0	1.0	18.6	18
VTX1200	12.0	12.3	16.0	1.0	18.0	18

All dimensions in inches *Weights in pounds*

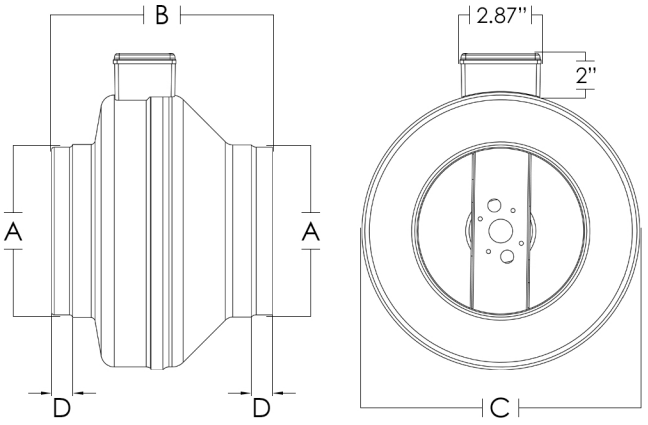

VTX Series Performance Data

FAN MODEL	Duct Dia.	RPM	Volts	Rated Watts	Max Amps	Static Pressure in Inches W.G. 0"	0.125"	0.2"	0.25"	0.375"	0.5"	0.75"	1"	1.25"	1.5"	2"	Max Ps
VTX400	4"	2970	120	69	0,57	198	184	175	170	157	144	122	98	71	15	---	1.885"
VTX600L	6"	2950	120	70	0,58	278	256	244	237	215	191	152	117	82	50	---	1.803"
VTX600	6"	3050	120	140	1,28	497	477	465	456	434	411	364	318	273	229	136	2.744"
VTX800L	8"	3000	120	196	1,62	651	621	602	588	555	513	416	349	294	245	162	2.856"
VTX800	8"	3060	120	260	2,29	739	703	681	667	628	591	531	468	408	357	268	3.042"
VTX1000	10"	3070	120	273	2,28	791	748	723	706	664	624	555	489	431	378	280	3.044"
VTX1200L	12"	2970	120	272	2,26	892	864	846	833	799	761	677	590	510	442	313	2.958"
VTX1200	12"	2820	120	393	3,26	1124	1090	1067	1051	1006	954	845	733	631	549	404	3.503"

Performance certified is for installation type D - Ducted inlet, Ducted outlet. Speed (RPM) shown is nominal. Performance is based on actual speed of test. Performance ratings include the effects of appurtenances (accessories) Inlet Duct, Inlet Bell, Outlet Duct

VTX Series Fan Specifications

Fan Tag	Fan Model	Qty	CFM	SP	Accessories	Remarks

Project _____ Submitted _____

Customer _____ Approved _____

Location _____

ATMOSPHERE

PERFORMANCE 10 year WARRANTY

2480 Boul. des Entreprises Terrebonne, Quebec J6X 4J8 CANADA
T : 450.477.1100 F : 514.313.5700 TF : 1.800.489.1301
WWW.ATMOSPHERE.COM

FEBRUARY 2020

Customer support : info@atmosphere.com
Sales inquiries : sales@atmosphere.com

ETL LISTED c US Intertek

Panasonic

Panasonic is the exclusive distributor of Atmosphere products in the US

Panasonic IAQ Division
Two Riverfront Plaza
Newark, NJ 07102
na.panasonic.com/us/iaq

For Order Information
PHONE: 866-292-7299
FAX: 888-553-0723
ventfans@us.panasonic.com

Design and specifications subject to change without notice.

Pending AMCA Certification