MicroMetl

Since 1965

Mixing Box
MB-GP-D2
Install Guide

MicroMetl

Since 1965

Table of Contents

Topic	Page Number
General	1
Honeywell JADE Control Document	4
Wiring Diagram	16

MicroMetl

Since 1965

INSTALLATION INSTRUCTIONS
General Purpose
Mixing Box - “The CUBE”

GENERAL

IMPORTANT: Read these instructions completely before attempting to install this economizer accessory.

These instructions are intended as a general guide and do not supersede local codes in any way.

All phases of the installation must comply with all NATIONAL, STATE and LOCAL CODES.

IMPORTANT: This document is the property of the end user and is to remain with the equipment.

When ordered with controls the MicroMetl Economizer/Mixing Box utilizes the latest technology available for integrating the use of free cooling with mechanical cooling for packaged rooftop units and air handlers. The solid-state control system optimizes energy consumption, zone comfort, and equipment cycling by operating the compressors when the outdoor-air temperature is too warm, integrating the compressor with outdoor air when free cooling is available, locking out the compressor when outdoor-air temperature is too cold and Demand Control Ventilation (DCV) is supported.

Depending on the controls options, this system can be used with single or multiple speed indoor fans.

MicroMetl Economizer’s and Mixing Boxes utilize gear-driven technology with a direct-mount spring return actuator that will close upon loss of power.

When ordered with controls, the MicroMetl Economizer/Mixing Box comes standard with a Mixed Air Sensor (Supply Air Sensor), and the option of outdoor Dry Bulb, outdoor Enthalpy, Differential Dry Bulb, and Differential Enthalpy Sensors. CO_2 and Smoke Detection are also additional field installed options.

When ordered without controls, the MicroMetl Economizer/Mixing Box will have a 2-10Vdc (4-20mV option) controlled actuator only. All controls, including sensors, will be provided by others. No wiring schemes or controls instructions will be included with these instructions.

Optional barometric relief dampers are available for natural building pressurization control.

Optional motorized relief is available for positive closure.

An optional power exhaust system is also available for applications requiring even greater exhaust capabilities. These exhaust options include Constant Volume Propeller Fan, Constant Volume Centrifugal Blower, and Variable (Modulating) Centrifugal Blower for building pressure control.

See supplemental instructions for more details.

SAFETY CONSIDERATIONS

⚠ WARNING

Turn off main power to the roof top unit (RTU) or air handling unit (AHU). Lockout and tag disconnect switch before starting installation, performing service, or maintenance operations.

Electrical shock and/or moving parts could cause personal injury, or death.

CAUTION

HEAVY OBJECT

To prevent personal injury use lifting aides and proper lifting techniques when installing, removing or replacing.

CAUTION

When working on air conditioning equipment, observe precautions in literature, tags and labels attached to the unit and other safety precautions that may apply.

Installation and servicing of air conditioning equipment can be hazardous due to high pressures of hazardous gases, moving parts, electrical components, and sharp sheet metal parts. Wear safety glasses and gloves.

Only trained and qualified service personnel should install, service, or repair air conditioning equipment. Untrained personnel can perform basic maintenance functions of cleaning coils, and cleaning and replacing filters, but all other operations should be performed by trained service personnel.

Manufacturer reserves the right to discontinue, or change at any time, specifications, design and prices without notice and without incurring obligations.
Copyright MicroMetl Corporation 2016. All rights reserved.

PRE-INSTALLATION

1. **Complete Pre-installation Checks**: Remove accessory packaging and inspect shipment for damage. File claim with shipping company if accessory is damaged. Contact MicroMetl Corp. if incomplete.

2. **Check Unit Clearance:** Provide sufficient space for airflow clearance, wiring, and servicing accessory after it is mounted on unit.

3. **Outdoor Air and Relief Air Grille/Hood Considerations:** The volume of air, pressure drop, and water penetration are major concerns when determining the size and appearance of the Grilles or Hoods being considered for OA and Relief Air.

There are many options available from manufacturers such as Shoemaker, Hart and Cooley, Reliable, Ruskin, and others that can provide functional and architecturally pleasing louvers.

MicroMetl can also provide the necessary Hoods and barometric dampers to meet your needs. Contact your local HVAC Distributor for details.

INSTALLATION INSTRUCTIONS

1. Locate the metal control box (attached to mixing box for shipping purposes only) containing the controller, self-drilling screws, wiring harness, and dry bulb or enthalpy sensors.

2. Review any additional accessory items that may affect the sequence of this installation (e.g. Filter Rack).

3. Determine mounting location for metal control box.

4. Determine orientation required for the Mixing Box Return Air (RA) and Outside Air (OA) Dampers.

Note: *When shipped, the RA Dampers are in the open position and the OA Dampers are in the closed position.*

5. Mount mixing box to return air section of the unit using several 1/2" sheet metal screws (Fig. 1).

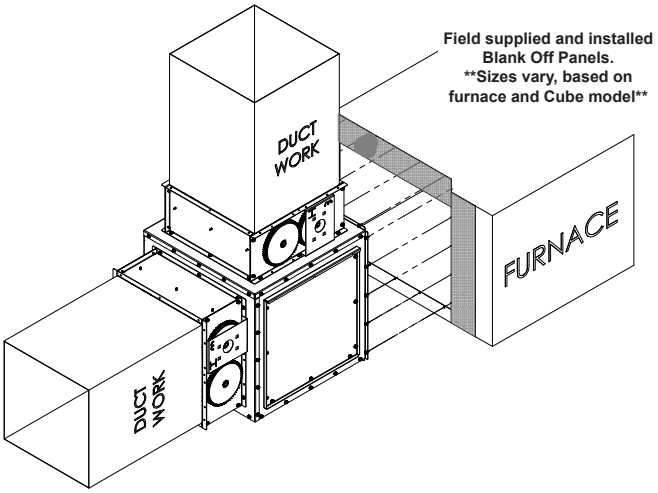

Fig. 1 - Horizontal Application

Important: *To avoid damage to coils or blockage of filter racks, screw length should be no longer than 1/2".*

Note: *For proper Economizer Operation, the Mixing Box must be installed square to prevent damper binding.*

5. To relocate and/or re-orient one or both dampers, first remove the screws around the perimeter of the existing panel(s) identified for the new location of the Damper Assembly and set aside (Fig. 2).

6. Remove the screws around the perimeter of damper(s) that will be relocated to the new location determined from step 2 (Fig. 3, and 3a).

Note: *Be certain the dampers are square when installing or repositioning to prevent binding of the blades.*

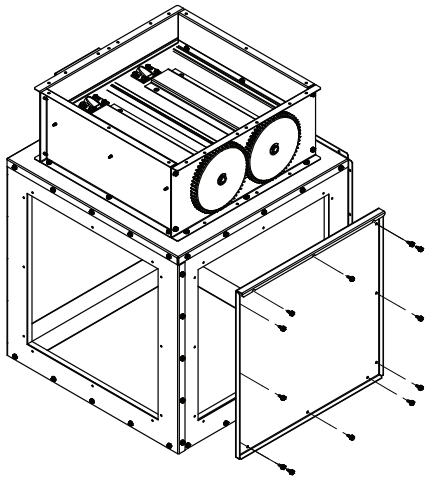

Fig. 2 - Panel Removal

7. Replace the panels removed in step 2 to the remaining openings and attach to Mixing Box.

8. Mount metal control box in desired location determined earlier in step 3. (Fig. 4)

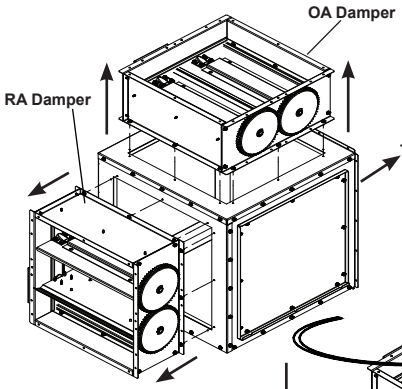

Fig. 3 - Old location

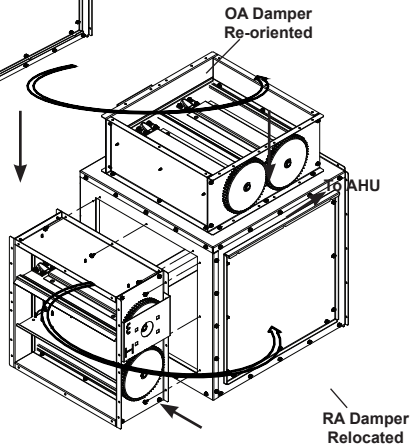

Fig. 3a - New location

Manufacturer reserves the right to discontinue, or change at any time, specifications, design and prices without notice and without incurring obligations.
Copyright MicroMetl Corporation 2016. All rights reserved.

9. If possible mount OA Sensor in OA Hood, or as close to OA Hood as possible. (Not to exceed 200 ft. from Controller)

10. Route wiring from OA Sensor to control box through grommet hole.

11. Route wiring harness from Actuator Motors to control box through grommet hole.

Note: *Wire Logic, Actuator and Sensors as noted on the provided Wire Diagram and Controls Document.*

12. Run control system and check damper operation. Make adjustments to dampers and motor if required.

13. Attach duct work to RA and OA sections of mixing box.

14. Complete unit installation.

Important: *Make sure to tape/caulk all joints/seams to insure airtight connections.*

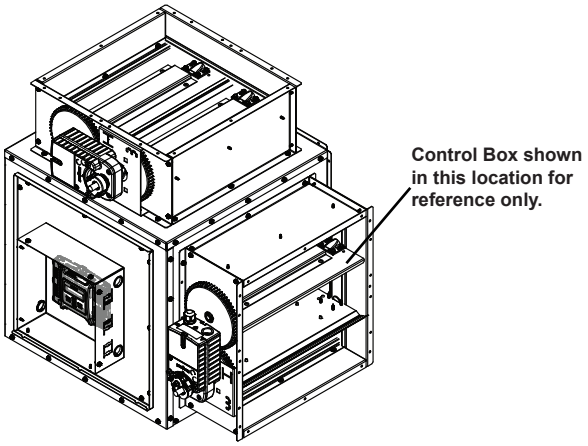

Fig. 4 - Re-assembled with Actutors and Control Box Installed

MicroMetl Indianapolis
3035 N. Shadeland Ave., Suite 300
Indianapolis, IN 46226
1.800.MMC.HVAC (EST)
indycustomerservice@micrometl.com

MicroMetl Longview
201 Kodak Blvd.
Longview, TX 75602
1.903.248.4800 (CST)
longviewcustomerservice@micrometl.com

MicroMetl Sparks
905 Southern Way
Sparks, NV 89431
1.800.884.4662 (PST)
sparkscustomerservice@micrometl.com

Manufacturer reserves the right to discontinue, or change at any time, specifications, design and prices without notice and without incurring obligations.
Copyright MicroMetl Corporation 2016. All rights reserved.

Form No.IN-MBX-GP-A

MicroMetl

Since 1965

CONTROL DOCUMENT
Honeywell JADE Controls
For Mixing Boxes and Economizers

GENERAL

IMPORTANT: Read these instructions completely before attempting to install this economizer accessory.

These instructions are intended as a general guide and do not supersede local codes in any way.

All phases of the installation must comply with all NATIONAL, STATE and LOCAL CODES.

IMPORTANT: This document is the property of the end user and is to remain with the equipment.

When ordered with controls the MicroMetl Economizer/Mixing Box utilizes the latest technology available for integrating the use of free cooling with mechanical cooling for packaged rooftop units and air handlers. The solid-state control system optimizes energy consumption, zone comfort, and equipment cycling by operating the compressors when the outdoor-air temperature is too warm, integrating the compressor with outdoor air when free cooling is available, locking out the compressor when outdoor-air temperature is too cold and Demand Control Ventilation (DCV) is supported.

Depending on the controls options, this system can be used with single or multiple speed indoor fans.

The JADE™ Economizer System is an expandable Economizer Control System, which includes a W7220 Economizer Module (controller) with an LCD and keypad. The W7220 can be configured with optional sensors.

The W7220 Economizer Module can be used as a Standalone Economizer Module wired directly to a Commercial Setback Space Thermostat and Sensors to provide Outdoor Air Dry Bulb Economizer control.

The W7220 Economizer Module can be connected to optional Sylk Bus (S-Bus) Sensors for Single or Comparative (Differential/Dual) Enthalpy control. The W7220 Economizer Module provides power and communications on the S-Bus for the Sylk Bus sensors.

The W7220 Economizer Module automatically detects sensors by polling to determine which sensors are present. If a sensor loses communications after it has been detected, the W7220 Economizer Module indicates a Device Fail Error on its LCD.

SAFETY CONSIDERATIONS

⚠ WARNING

Turn off main power to the roof top unit (RTU) or air handling unit (AHU). Lockout and tag disconnect switch before starting installation, performing service, or maintenance operations.

Electrical shock and/or moving parts could cause personal injury, or death.

CAUTION

When working on air conditioning equipment, observe precautions in literature, tags and labels attached to the unit and other safety precautions that may apply.

Installation and servicing of air conditioning equipment can be hazardous due to high pressures of hazardous gases, moving parts, electrical components, and sharp sheet metal parts. Wear safety glasses and gloves.

Only trained and qualified service personnel should install, service, or repair air conditioning equipment. Untrained personnel can perform basic maintenance functions of cleaning coils, and cleaning and replacing filters, but all other operations should be performed by trained service personnel.

For additional information, you can scan QR Code with your smart device to view Honeywell Document 63-2700

Manufacturer reserves the right to discontinue , or change at any time, specifications, design, and prices without notice and without incurring obligations.
Copyright MicroMetl Corporation 2017. All rights reserved.

Form No. CD-HJ-C

Economizer Module:

This is the core of the JADE™ Economizer System and includes the user interface for the system. The W7220 Economizer Module provides the basic inputs and outputs to provide simple economizer control. When used with the optional Sylk Bus Actuator and Sensors, the Economizer Module provides more advanced economizer functionality.

Rated Voltage: 20 to 30 Vac RMS; 50/60 Hz with 100 VA maximum system (transformer) input.

Nominal Power Consumption (at 24 Vac, 60 Hz): 11.5 VA without sensors or actuator(s).



MAT/OAT (Analog) Sensors:

The minimum requirement for operation is to have a 20k-Ohm Mixed Air (MA) Analog Sensor and a 20k-Ohm Analog Outdoor Air (OA) Sensor for Dry Bulb Changeover applications. These sensors are identified as C7250A and have a Temperature range of -40 to 150 °F (-40 to 65 °C) with a Temperature accuracy of -0°F/+2°F.



Sylk Bus Sensors (optional):

The Sylk Bus Sensor is a combination temperature and humidity sensor which is powered by and communicates on the Sylk Bus. Up to three sensors may be configured with the JADE™ Economizer Module. These sensors are identified as C7400S and have a Temperature range of -40 to 150°F (-40 to 65°C) with a Temperature accuracy of -0°F/+2°F and Humidity range of 0% to 100% with accuracy within 5%.

These Sensors have a 3-Dip Switch array for Addressing. The Default is for OA applications. They can be set for RA and DA installation.

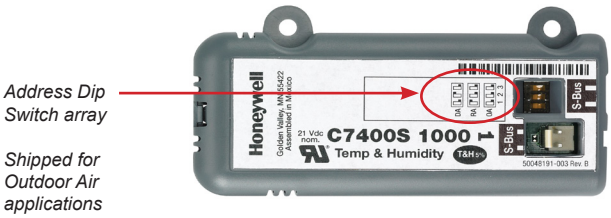

CO2 Sensor (optional):

A CO_2 sensor can be added for Demand Control Ventilation (DCV). Either an analog (2-10Vdc) or a wall-mount Sylk bus TR40 CO_2 sensor can be used with the Jade economizer. These CO_2 Sensors can be Wall Mounted with a display, or Duct Mounted without a display.

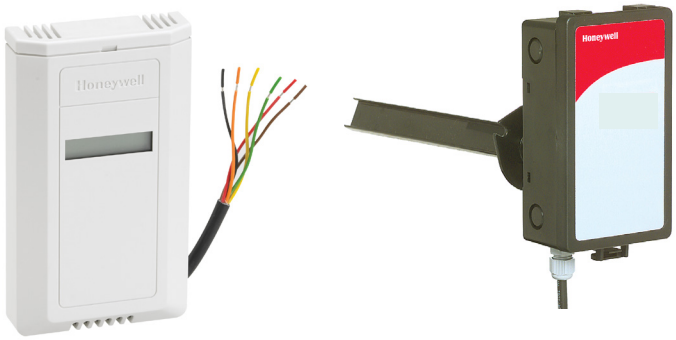

Direct Coupled Actuators:

Actuators vary is size and are either controlled via the Silk Bus (S-Bus) or by an analog 2-10Vdc signal. The Logic (W7220) can only support one S-Bus Actuator; therefore, all subsequent Actuators will be analog driven.

Actuator Power Consumption is dependent on size. The range for MicroMetl Corp. Economizers is between 6VA and 14VA.



Manufacturer reserves the right to discontinue , or change at any time, specifications, design, and prices without notice and without incurring obligations.
Copyright MicroMetl Corporation 2017. All rights reserved.

PRE-INSTALLATION

When Installing This Product:

Read these instructions carefully. Failure to do so could damage the product or cause a hazardous condition.

Check ratings given in instructions and on the product to ensure the product is suitable for your application.

Mounting:

MicroMetl does not always provide a mounted W7220 control. In some cases the control must be mounted by the installer in the RTU control panel. In others the control may be mounted in an enclosure in the Outdoor Air Hood, or as in the case of Mixing Boxes, will require the installer to mount the control external of the mixing box on a panel, or the duct that is most convenient to access.

The W7220 module may be mounted in any orientation; however, mounting in the orientation that permits proper viewing and use of the LCD display and keypad is best.

IMPORTANT: *Avoid mounting in areas where corrosive vapors can attack the metal parts of the module's circuit board.*

IMPORTANT: *The module must be mounted in a position that allows clearances for wiring, servicing, and removal.*

For Mixed Air Temperature (MAT – aka Discharge or Supply Air) use mounting location specified per the Mixing Box or Economizer instructions.

For optional Outside Air Temperature (OAT) (Dry-bulb) Strategy mount in OA section per the Mixing Box or Economizer instructions.

For optional Differential/Comparative (Dry-Bulb) Temperature Strategy mount provided Enthalpy Sensor in the RA duct per the Mixing Box or Economizer instructions and set the Dip Switches for RA operation. Mount the sensor in a position that will allow for proper clearance for installation, servicing, wiring, and removal.

For optional OA Enthalpy Strategy mount in OA section per the Mixing Box or Economizer instructions.

For optional Differential/Comparative Enthalpy Strategy mount the provided Enthalpy Sensor in RA duct per the Mixing Box or Economizer instructions and set the Dip Switches for RA operation. Mount the sensor in a position that will allow for proper clearance for installation, servicing, wiring, and removal.

INSTALLATION

1. Disconnect power to RTU before beginning installation.

2. Note orientation, opening rotation, and spring return rotation of damper assembly - i.e., Outside Air (OA) Damper should be open and Return Air (RA) Damper should be closed.

3. Terminate required Inputs and Outputs (I/O): For the JADE Economizer to function correctly, the following I/O, at a minimum, must be connected and operational - R, C, Y1-I, Y1-O, Y2-I, MAT, OAT (or Enthalpy OA via S-Bus), at least one Actuator (via S-Bus or analog 2-10Vdc), and an Occupancy input (or programmed for Always Occupied). See Wire Diagram for details.

4. Sensor Configuration: The JADE Economizer automatically detects sensors attached and automatically configures for Single Dry Bulb, Single Enthalpy, Differential Dry Bulb and Differential Enthalpy.

5. Option: If DCV and/or Power Exhaust is required, additional wiring will be required. The JADE Control will auto detect the CO_2 Sensor and will require additional setup.

NOTE: *The W7220 Economizer Module will be in the "Set Up" mode for the first 60 minutes after powered. The Mixed Air (MA) sensor is a system "critical" sensor, if the MA sensor is removed during the set up mode, the W7220 will alarm. If a sensor for OA or S-Bus device (sensor, actuator) is disconnected during the set up mode, the W7220 will not alarm that failure. After 60 minutes the W7220 will change to operation mode and all components removed or failed will alarm in the operation mode.*

Economizer Module Location and Mounting:

MicroMetl does not always provide a mounted W7220 control. In some cases the control must be mounted by the installer in the RTU control panel. In others the control may be mounted in an enclosure in the Outdoor Air Hood, or as in the case of Mixing Boxes, will require the installer to mount the control external of the mixing box on a panel, or the duct that is most convenient to access.

The W7220 module may be mounted in any orientation; however, mounting in the orientation that permits proper viewing and use of the LCD display and keypad is best.

IMPORTANT: *Avoid mounting in areas where corrosive vapors can attack the metal parts of the module's circuit board.*

IMPORTANT: *The module must be mounted in a position that allows clearances for wiring, servicing, and removal.*

Sensor Location and Mounting:

The JADE™ Economizer System uses digital sensors for control. The C7250 Temperature Sensor (MAT[a] and OAT[b]) is a 20k-Ohm NTC device (Fig. 1). An MAT Sensor is required for all applications and is typically mounted in the Blower Section of the HVAC Unit (Fig. 3). It can either be wired using a 2-pin header or using a Molex Edge Connector.

The OAT Sensor (Fig. 1) is the minimum requirement for OA Temp. Sensing. This is usually installed in the OA Hood of the Economizer, but Mixing Boxes and other

Manufacturer reserves the right to discontinue , or change at any time, specifications, design, and prices without notice and without incurring obligations.
Copyright MicroMetl Corporation 2017. All rights reserved.



Fig. 1 - 20k Ohm Dry Bulb Sensor

application may require field installation in the OA Duct. Optional OA[c], RA[d] and DA[e] Sylk Bus sensors (Fig. 2) communicate with the W7220 on the two-wire communication bus and can either be wired using a 2-pin header or using a Molex Edge Connector.



Fig. 2 - Sylk Bus Sensor

MAT[a] = Mixed Air Temperature Sensor (aka Supply Air)

OAT[b] = Outdoor Air Temperature Sensor

OA[c] = Outdoor Air Temperature and Humidity Sensor (default)

RA[d] = Return Air Temperature and Humidity Sensor

DA[e] = Discharge Air Temperature and Humidity Sensor

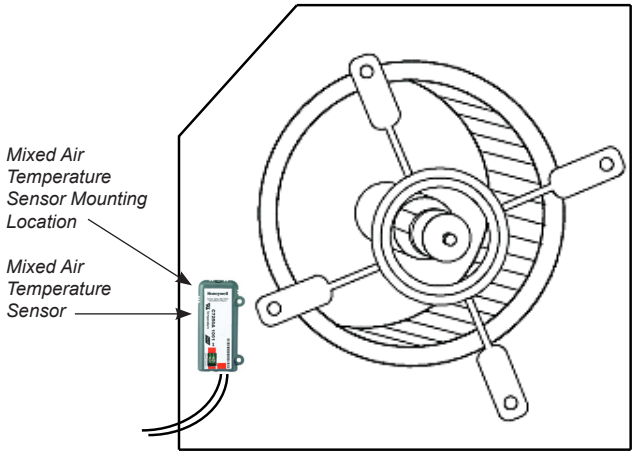

Fig. 3 - Typical MAT Installation Location

WIRING

All wiring must comply with applicable electrical codes and ordinances, or as specified on installation wiring diagrams. Module wiring at the OEM Factory is terminated via the Header Pin Terminals (Fig. 5) located on the left (Table 1) and right (Table 2) sides. The Header Terminal Pins and the terminal blocks have common terminations for the appropriate inputs or outputs.

Sylk Bus (S-Bus) Accessories:

Sylk is a two-wire, polarity insensitive bus that provides communications between a Sylk-enabled actuator and/or sensor(s) and a Sylk enabled controller.

The Sylk-enabled actuator and/or sensor(s) may be mounted up to 200 ft. (61m) from the controller; however, twisted pair wire is recommended for wire runs longer than 100 ft. (30.5m). Using Sylk-enabled controls saves I/O on the controller and is faster and cheaper to install since the bus is polarity insensitive.

Depending on the model the S-Bus cable can be either a pair of Brown wires, or a pair of Gray wires.

Important: *Do not route High Voltage wire alongside Low Voltage/ S-Bus wire. The electrical-magnetic force field induced by the High Voltage Cable will affect the operation of the system.*

Actuator Wiring Options:

1. The W7220 controller can only have one (1) communicating actuator connected to it.

2. Or, up to four (4) non-communicating and two (2) 2-position actuators (1 each on EXH1 and AUX1 O)

3. Or, one (1) communicating with up to four (4) non-communicating and two (2) 2-position actuators (1 each on EXH1 and AUX1 O). When using a 2-position actuator on the AUX1-O, the AUX1-O must be programmed for Exh2. The % open programmed for the AUX1-O is the % open the damper will be when the actuator powered open. Connect 24 Vac to AUX1-O and W7220 “C” terminal. EXH1 and AUX1-O are 24Vac outputs.

Important: *Multiple actuators may require a larger VA control transformer, or multiple transformers.*

Sensors:

The Mixed Air Temperature (MAT - aka Discharge or Supply Air) Sensor is a 20k-Ohm Negative Temperature Coefficient (NTC) device. The optional Outdoor Air Temperature (OAT) sensor is also a 20k-Ohm NTC device. These sensors (Fig. 1) must only be connected to the MAT and OAT terminals.

Typically, 18ga. wire is to be used and is good up to 200 ft. The wiring pair supplied by MicroMetl for the analog sensors can be any number of color combinations. Some models use the same wires as the OA Enthalpy Sensor (see Sylk Bus Accessories), which can be moved to the OAT or S-Bus terminals, as needed. Just be sure to connect only the Enthalpy Sensor to the S-Bus, and only the Dry Buld Temperature Sensor to the OAT terminal.

Manufacturer reserves the right to discontinue , or change at any time, specifications, design, and prices without notice and without incurring obligations.
Copyright MicroMetl Corporation 2017. All rights reserved.

CO_2 Sensor

See instructions supplied with the CO_2 sensor supplied for your project.

When using the C7232 Honeywell CO_2 sensors the black and brown common wires are internally connected to each other allowing for one wire to be connected to “IAQ COM” on the W7220. Use the power from the W7220 to power the CO_2 sensor, but if using a separate transformer tie the common from each transformer together. (See Fig. 4 for the C7232 and C7632 wiring examples.)

Module Wiring

The left Terminal block of the W7220 economizer module provides two connection options. One is the 6-lug terminal block and the other is pin connectors. MicroMetl only offers the pin connectors (Fig. 5). Table 1 and 2 provide further explanation of the terminals. Thermostat Connections

Refer to the Wire Diagram provided with these instructions for specific wiring details.

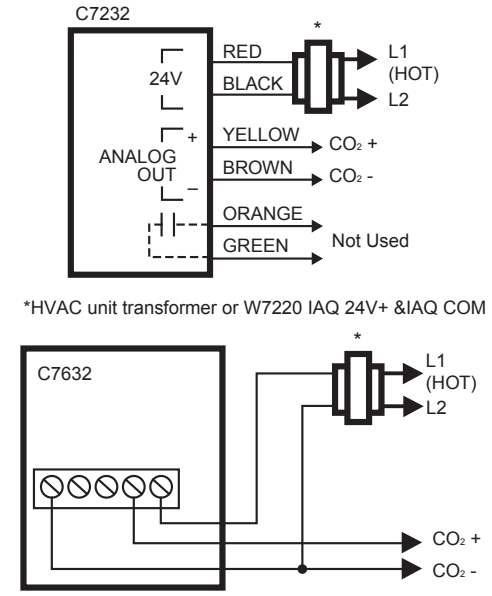

Fig. 4 – Typical CO_2 Sensor wiring

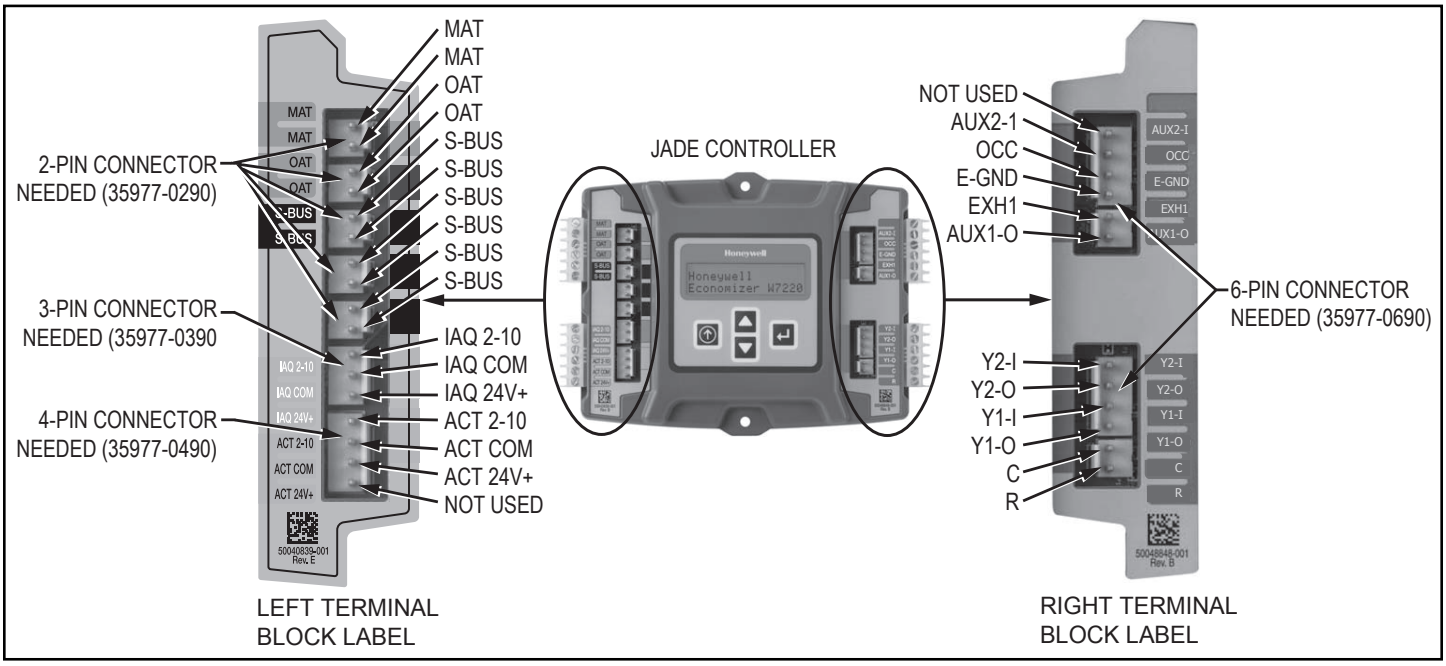

Fig. 5 – JADE W7220 Economizer Module Pin Identification

Manufacturer reserves the right to discontinue , or change at any time, specifications, design, and prices without notice and without incurring obligations.
Copyright MicroMetl Corporation 2017. All rights reserved.

Label	Type	Description
Top Left Terminal Block		
MAT MAT	20k NTC and COM	Mixed Air Temperature Sensor (polarity insensitive connection)
OAT OAT	20k NTC and COM	Mixed Air Temperature Sensor (polarity insensitive connection)
S-BUS S-BUS	SYLK Bus	Sylk Bus sensor (polarity insensitive connection)
Bottom Left Terminal Block		
IAQ 2-10	2-10 Vdc	Air Quality Sensor Input (e.g. CO_2 sensor)
IAQ COM	COM	Air Quality Sensor Common
IAQ 24V	24 Vac	Air Quality Sensor 24 Vac Source
ACT 2-10	2-10 Vdc	Damper Actuator Output (2-10 Vdc)
ACT COM	COM	Damper Actuator Output Common
ACT 24V	24 Vac	Damper Actuator 24 Vac Source
	n/a	The bottom pin is not used

Table 1 – W7220 Left Side Control Description/Identification

Label	Type	Description
Top Right Terminal Block		
	n/a	The first pin is not used
AUX2-I	24 Vac IN	Shut Down (SD) or Heat (W) Conventional only or Heat Pump Changeover (O/B) in Heat Pump mode
OCC	24 Vac IN	Occupied / Unoccupied Input
E-GND	EGND	Earth Ground – System Required
EXH1	24 Vac OUT	Exhaust Fan 1 Output
AUX1-O	24 Vac OUT	Programmable: Exhaust fan 2 output Or ERV Or System Alarm output
Bottom Right Terminal Block		
Y2-I	24 Vac IN	Y2 In – Cooling Stage 2 Input from space thermostat
Y2-O	24 Vac OUT	Y2 Out – Cooling Stage 2 Output to stage 2 mechanical cooling
Y1-I	24 Vac IN	Y1 In – Cooling Stage 1 Input from space thermostat
Y1-O	24 Vac OUT	Y1 Out – Cooling Stage 1 Output to stage 1 mechanical cooling
C	COM	24 Vac Common
R	24 Vac	24 Vac Power (Hot)

Table 1 – W7220 Right Side Control Description/Identification

SETUP AND CONFIGUATION

Enthalpy Control Sensor Configuration:

The Enthalpy Control sensor C7400S communicates with the W7220 controller on the two-wire communications bus and can either be wired using a two pin header or using a side (edge) connector. This sensor is used for all Temperature/Humidity sensing for OA, RA, and DA (Discharge Air), depending on address configuration of the three position DIP switches. During installation the sensors are set for the usage desired. (See Table 3 for switch setting details.)

NOTE: *The protective film on the dip switch is only necessary during the factory assembly process. Simply push through the film to set the dip switches; this will not harm the device.*

Once installed, a sensor can be changed to a different application by simply changing the DIP switch setting and relocating to the appropriate location.

Enthalpy Settings:

When the OA Temperature, Enthalpy and Dewpoint are below the respective setpoints, the outdoor air can be used for economizing. Fig. 6 shows the new Single Enthalpy Boundaries the JADE™ Economizer System uses. There are 5 boundaries (setpoints ES1 thru ES5), which are defined by Dry Bulb Temperature, Enthalpy and Dewpoint. Refer to Table 6 for ENTH CURVE setpoint values.

DIP Switch Positions for Switches 1, 2, & 3			
Use	**1**	**2**	**3**
MAT [a]	N/A	N/A	N/A
MAT [b]	N/A	N/A	N/A
OA [c] SylkBus	OFF	OFF	OFF
RA [d] SylkBus	ON	OFF	OFF
DA [e] SylkBus	OFF	ON	OFF

MAT [a] = Mixed Air Temperature Sensor
OAT [b] = Outdoor Air Temperature Sensor
OA [c] = Outdoor Air Temperature and Humidity Sensor (default)
RA [d] = Return Air Temperature and Humidity Sensor
DA [e] = Discharge Air Temperature and Humidity Sensor

Table 3 - JADE Sensor Identification and Dip Switch Setting

To use Enthalpy, the W7220 must have a C7400S Enthalpy Sensor for OA. The W7220 calculates the Enthalpy and Dewpoint using the OA Temperature and Humidity input from the OA Sensor. When

Manufacturer reserves the right to discontinue , or change at any time, specifications, design, and prices without notice and without incurring obligations.
Copyright MicroMetl Corporation 2017. All rights reserved.

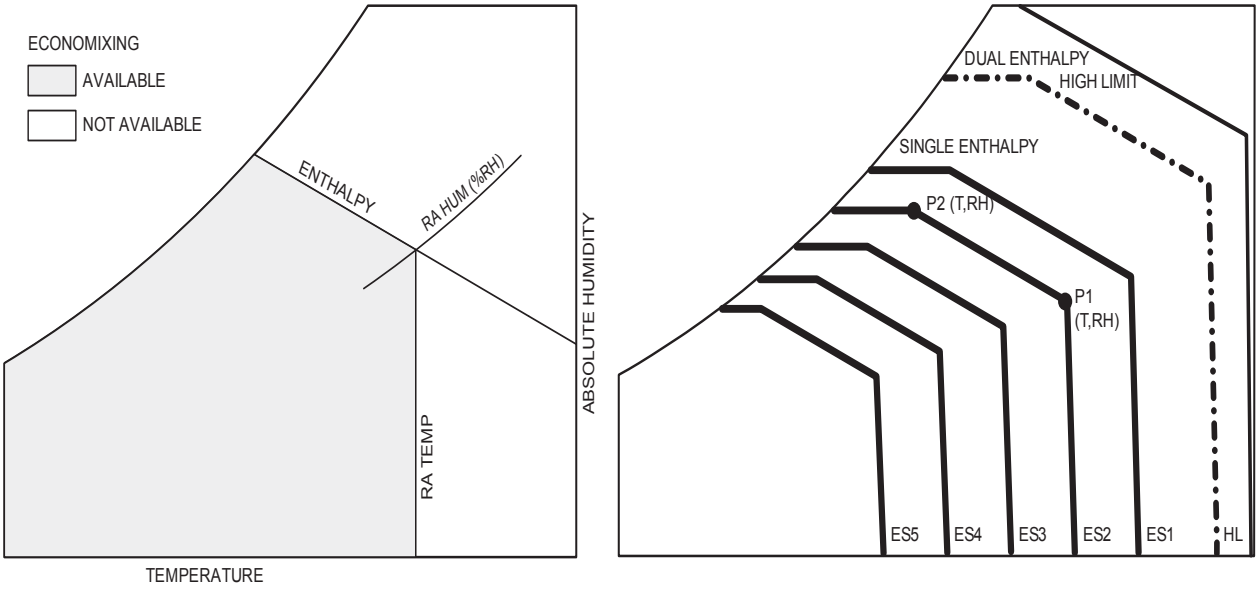

Fig. 6 – Enthalpy Boundaries

Enthalpy Curve	Temp. Dry Bulb (°F)	Temp. Dewpoint (°F)	Enthalpy (btu/lb/da)	Point P1		Point P2	
				Temp (°F)	Humidity %RH	Temp (°F)	Humidity %RH
ES1	80.0	60.0	28.0	80.0	36.8	66.3	80.1
ES2	75.0	57.0	26.0	75.0	39.6	63.3	80.0
ES3	70.0	54.0	24.0	70.0	42.3	59.7	81.4
ES4	65.0	51.0	22.0	65.0	44.8	55.7	84.2
ES5	60.0	48.0	20.0	60.0	46.9	51.3	88.5
HL	86.0	66.0	32.4	86.0	38.9	72.4	80.3

Table 4 – Enthalpy Cures Setpoints

the OA Temperature, OA Humidity and OA Dewpoint are all below the selected boundary, the economizer sets the economizing mode to YES, economizing is available.

When all of the OA conditions are above the selected boundary, the conditions are not good to economize and the mode is set to NO. There is also a High Limit (HL) boundary for Differential (Dual) Enthalpy. Refer to Table 6 for ENTH CURVE and High Limit (HL) setpoint values.

CO_2 Setup:

When using any CO_2 sensor be sure the sensor scale and the JADE scale are the same. For example, as shipped, the Honeywell C7232 scale is 500 – 1500 ppm @ 2-10Vdc. The W7220 control is 0-2000 ppm and 2-10Vdc, as shipped. When using the C7232 with the W7220 you can change the CO_2 jumpers to match the JADE, or you will need to set the CO_2 ZERO to 500 ppm and the CO_2 SPAN to 1000 ppm in the ADVANCED SETUP menu - See Fig. 7 and Tables 5 & 6 for how the Honeywell C7232 sensor is shipped.

SW1	SW2	AN (ppm)	Relay [a] (ppm)
ON	ON	0 to 1000	1000
ON	Off	0 to 2000	1200
Off [b]	On [b]	500 to 1500	800
Off	Off	500 to 2000	1200

[a] Dry Contact close/open (see Fig. 4)
[b] As shipped

Table 5 – Honeywell C7232 Switch ppm Output Configuration See Fig. 6 for Jumper Location

AN	OUT	
	0-100%	20-100%
Voltage	0-10Vdc	2-10Vdc
Current	0-20 mA	4-20 mA

Table 6 – Honeywell C7232 Voltage/Current Output Configuration

Manufacturer reserves the right to discontinue , or change at any time, specifications, design, and prices without notice and without incurring obligations.
Copyright MicroMetl Corporation 2017. All rights reserved.

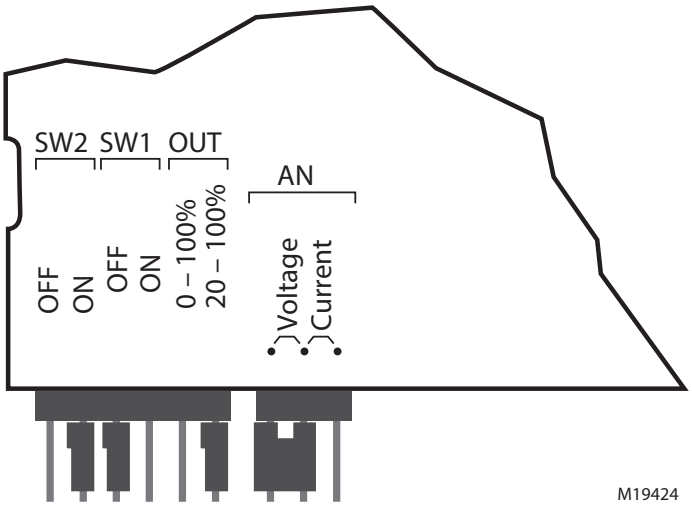

Fig. 7 – Honeywell C7232 Jumper Configuration

Two-Speed Fan Operation:

The W7220 controller has the capability to work with a system using a 2-speed supply fan. The W7220 does not control the Supply Fan directly. It uses the following input status to determine the speed of the supply fan to control the OA damper to the required position for that fan speed.

The W (heating mode) is not controlled by the W7220, but it requires the status to know where to position the OA Damper for Minimum Position for the fan speed (see Table 7).

State	Fan Speed
OCC (Fan Only)	Low
Y1	Low
Y2	High
W	High

Table 7 – Fan Speed

The 2 speed fan delay is available when the system is programmed for 2 speed fan (in the System Setup menu item). The 2 speed fan delay is defaulted to 5 minutes and can be changed in the Advanced Setup Menu to between 0 min. to 20 min. When the unit has a call for Y1 (IN) while in the Free Cooling Mode and there is a call for Y2 (IN), the 2-speed fan delay starts while the unit fan goes to High Speed. The OA Damper modulates to 100% open.

The sequence is as follows:

• The Y2 (IN) call will be satisfied within the delay time while the damper is 100% open and the fan on high speed, or:

• The delay time will be exceeded and the Y1 compressor will be commanded on.

User Interface and Keypad Overview:

The user interface consists of a LCD display and a 4-button keypad on the front of the economizer controller. The four navigation buttons are used to scroll through the menus and menu items, select menu items, and to change parameter and configuration settings (see Fig. 8).



Fig. 8 – W7220 Typical Layout

Using the Keypad with Menus:

To use the keypad when working with menus:

• Press the ▲ (Up arrow) button to move to the previous menu.

• Press the ▼ (Down arrow) button to move to the next menu.

• Press the ↵ (Enter) button to display the first item in the currently displayed menu.

• Press the ⓘ (Menu Up/Exit) button to exit a menu's item and return to the list of menus.

Using Keypad with Settings and Parameters:

To use the keypad when working with Setpoints, System and Advanced Setup, Checkout tests and Alarms:

1. Navigate to the desire menu.

2. Press the ↵ (Enter) button to display the first item in the currently displayed menu.

3. Use the ▲ and ▼ buttons to scroll to the desired parameter.

4. Press the ↵ (Enter) button to display the value of the currently displayed item.

5. Press the ▲ button to increase (change) the displayed parameter value.

6. Press the ▼ button to decrease (change) the displayed parameter value.

Manufacturer reserves the right to discontinue , or change at any time, specifications, design, and prices without notice and without incurring obligations.
Copyright MicroMetl Corporation 2017. All rights reserved.

NOTE: *When values are displayed, pressing and holding the ▲ or ▼ button causes the display to automatically increment.*

7. Press the ↵ (Enter) button to accept the displayed value and store it in nonvolatile RAM.

8. "CHANGE STORED" displays.

9. Press the ↵ (Enter) button to return to the current menu parameter.

10. Press the ⏏ (MENU UP/EXIT) button to return to the previous menu.

Menu Structure

The Menus in display order are:

• STATUS*

• SETPOINTS

• SYSTEM SETUP

• ADVANCED SETUP

• CHECKOUT

• ALARMS

* This is a Read Only Menu. No values can be changed in this menu.

Setup Sequence:

It is important to establish the operating parameters the system will be operating prior to making changes to any MENU – i.e. Number of RTU/AHU fan speeds, with/without CO_2 (DCV), Heat Pump or Conventional, etc. and have all sensors installed and operational before attempting the setup sequence.

Equipment Type:

Determining the type of equipment is establishing whether it is a Heat Pump or Conventional Gas Heat. What determines the type of equipment is the type of Thermostat you are using. All of Carrier's Commercial Equipment, for example, use Conventional Gas Heat Thermostats whether they are Heat Pumps or Gas Heat models. But, their Residential/Light Commercial units use Heat Pump Thermostats or Conventional Thermostats; so set the JADE System up based on what type of Thermostat the equipment requires.

1. After Power Up scroll down ▼ to SYSTEM SETUP.

2. Enter the SYSTEM SETUP MENU and enter the Install Date.

3. Scroll down ▼ to EQUIPMENT and enter the equipment type.

Important: *If the system has a 2-speed fan and will be set up for 2-speed operation, then the Equipment Type will always be CONV. See Equipment Specific Optional Relay Kit for Heat Pump with 2-Speed Fan.*

4a. If Equipment Type (Thermostat) is Heat Pump with Single Speed Fan, change Equipment Type to HP.

a. Scroll down ▼ to AUX 2 IN and set value to O = Energize Reversing Valve in Cool, or B = Energize Reversing Valve in Heat.
b. Two Speed Fan Not an Option!
c. Press ⏏ (MENU UP/EXIT)
d. Scroll down ▼ to ADVANCED SETUP for DCV and/or DCVCAL ENA,

4b. If Equipment Type (Thermostat) is Conventional (Gas Heat), no change is necessary.

5. If the RTU/AHU Economize/Mixing Box instructions require the AUX2-I to be connected to W1 at the Low Voltage Terminal Board scroll to AUX2-IN to change the Shutdown (SD) function to Heat (W1)

6. For Fan Speed Options see following options:

Single Speed Fan and No DCV (CO_2)

1. After power up scroll down ▼ to SYSTEM SETUP

2. Enter the SYSTEM SETUP MENU and enter the install date.

3. If the RTU/AHU Economize/Mixing Box instructions require the AUX2-I to be connected to W1 at the Low Voltage Terminal Board scroll to AUX2-IN to change the Shutdown (SD) function to Heat (W1)

4. Press ⏏ (MENU UP/EXIT)

5. Scroll up ▲ to SETPOINTS and press ENTER

6. Scroll down ▼ to DRY BULB SET, or ENTH CURVE, depending on the OA Changeover Strategy of the equipment. Change value per local codes, Engineers specification, or desired setting.

Note: *For the California market, please refer to Table 8 for required changeover setpoints.*

7. Scroll down ▼ to MIN POS for minimum position setting.

8. Press ⏏ (MENU UP/EXIT) – Setup is complete.

2-Speed Fan:

1. After power up, scroll down ▼ to SYSTEM SETUP

2. Enter the SYSTEM SETUP MENU and enter the install date.

3. Scroll down ▼ to AUX2 IN – Change Shutdown (SD) to Heat (W1)

4. Scroll down ▼ to Fan Speed – Change from 1 Speed to 2 Speed.

5. Press ⏏ (MENU UP/EXIT)

6. Scroll down ▼ to ADVANCED SETUP if DCV option is in play

Manufacturer reserves the right to discontinue , or change at any time, specifications, design, and prices without notice and without incurring obligations.
Copyright MicroMetl Corporation 2017. All rights reserved.

(See DCV (CO_2) below).

If not:

7. Scroll up ▲ to and enter SETPOINTS

8. Scroll down ▼ to DRY BULB SET, or ENTH CURVE, depending on the OA Changeover Strategy of the equipment. Change value per local codes, Engineers specification, or desired setting.

Note: *For the California market, please refer to Table 8 for required changeover setpoints.*

9. Scroll down ▼ to MIN POS H (high speed) and MIN POS L (low speed) for minimum position settings.

10. Press ⓵ (MENU UP/EXIT) – Setup is complete.

DCV (CO_2)

1. After power up, scroll down ▼ to SYSTEM SETUP for install date. If previously in SYSTEM SETUP for Fan Speed Setup, scroll down ▼ to ADVANCED SETUP.

2. Enter ADVANCED SETUP and scroll down ▼ to CO_2 ZERO. Set the Zero Value (2Vdc) to match the CO_2 Sensor. See CO_2 Setup on Page 5 for example.

3. Scroll down ▼ to CO_2 SPAN. Set the Span to match the CO_2 Senor. See CO_2 Setup for example.

4. Press ⓵ (MENU UP/EXIT)

5. Scroll up ▲to SETPOINTS and press ↵ ENTER

6. Scroll down ▼ to DRY BULB SET, or ENTH CURVE, depending on the OA Changeover Strategy of the equipment. Change value per local codes, Engineers specification, or desired setting.

Note: *For the California market, please refer to Table 8 for required changeover setpoints.* 7. Scroll down ▼ to DCV SET to set the CO_2 setpoint

7. Scroll down ▼ to VENT MAX H (high speed) and VENT MAX L (low speed), and VENT MIN H (high speed) and VENT MIN L (low speed) for minimum position settings.

8. Press ⓵ (MENU UP/EXIT) – Setup is complete.

CHECKOUT

Inspect all wiring connections at the Economizer module's terminals, and verify compliance with the installation wiring diagrams.

For checkout, review the Status of each configured parameter and perform the Checkout tests.*

Device Type [a]	Climate Zones	Required High Limit (Economizer Off When):
		Description
Fixed Dry Bulb	1, 3, 5, 11-16	Outdoor air temperature exceeds 75°F
	2, 4, 10	Outdoor air temperature exceeds 73°F
	6, 8, 9	Outdoor air temperature exceeds 71°F
	7	Outdoor air temperature exceeds 69°F
Differential Dry Bulb	1, 3, 5, 11-16	Outdoor air temperature exceeds return air temperature
	2, 4, 10	Outdoor air temperature exceeds return air temperature minus 2°F
	6, 8, 9	Outdoor air temperature exceeds return air temperature minus 4°F
	7	Outdoor air temperature exceeds return air temperature minus 6°F
Fixed Enthalpy [b] + Fixed Dry Bulb	All	Outdoor air enthalpy exceeds 28 Btu/lb. of dry air [b] or Outdoor air temperature exceeds 75°F

[a] Only the high limit control devices listed are allowed to be used and at the setpoints listed. Others such as Dew Point, Fixed Enthalpy, Electronic Enthalpy, and Differential Enthalpy Controls, may not be used in any climate zone for compliance with Section 104.4(e)1 unless approval for use is provided by the Energy Commission Executive Director.

[b] At altitudes substantially different than sea level, the Fixed Enthalpy limit value shall be set to the enthalpy value at 75°F and 50% relative humidity. As an example, at approximately 6,000 foot elevation, the fixed enthalpy limit is approximately 30.7 Btu/lb.

Table 8 - California Title 24 Required Changeover Setpoints

Manufacturer reserves the right to discontinue , or change at any time, specifications, design, and prices without notice and without incurring obligations.
Copyright MicroMetl Corporation 2017. All rights reserved.

Status

Use the Status Menu to check the parameter values for the various devices and sensors configured.

***NOTE:** See "Interface Overview" on page 8 for information about menu navigation and use of the keypad.*

Checkout Tests:

Use the Checkout menu to test the damper operation and any configured outputs. Only items that are configured are shown in the Checkout Menu.*

***NOTE:** See "Interface Overview" on page 6 for information about menu navigation and use of the keypad.*

To perform a Checkout test:

1. Scroll to the desired test in the Checkout Menu using the ▲ (UP) and ▼ (DOWN) buttons.

2. Press the ↵ (ENTER) button to select the item.

3. RUN? will appear on the display.

4. Press the ↵ (ENTER) button to start the test.

5. The unit pauses and then displays IN PROGRESS

6. When all parameters have been tested, press the ⓘ (MENU UP/EXIT) to end the test.

The checkout tests can all be performed at the time of installation or any time during the operation of the system as a test that the system is operable.

Checkout using OA Sensor:

Dry Bulb Changeover Strategy:

1. Go into Setpoints and change the Dry Bulb Set value to 80ºF.

If OA temperature is below this value, the Economizer OA Damper should open on a call for First Stage Cooling. If OA conditions are above this temperature the Economizer operation will not be able to be tested via this method.

2. Remove the C7250A Dry Bulb Sensor from the OAT terminals and install a C7400S Enthalpy Sensor with date code 1301 or later.

3. Connect the C7400S S-Bus sensor to the S-Bus terminals (Brown or Gray) on the W7220A Jade using 18 AWG to 22 AWG solid or stranded wires.

3. Check the STATUS screen to make sure the OA Temperature and OA Humidity readings are present. This may take a minute to initialize.

4. Change the 3-position DIP switch on the C7400S sensor from 1 OFF, 2 OFF, 3 OFF to 1 ON, 2 ON, 3 ON position and immediately back to 1 OFF, 2 OFF 3 OFF position.

The output of the C7400S sensor to the W7220A will be 40ºF and 40 %RH which will allow the economizer to go into free cooling mode (economizing available).

5. Check STATUS again.

6. The Economizer OA Damper should open on a call for First Stage Cooling.

7. After 15 minutes the C7400S Sensor will change back to the actual OA Temperature and Humidity.

***NOTE:** If you remove a Dry Bulb Sensor or earlier version of the Enthalpy Sensor for this test, remove the test C7400S and replace with the original sensor. For OA temperature be sure to reconnect wires to the OAT terminals.*

Enthalpy Changeover Strategy:

1. Go to Setpoints and change Enth Curve to ES1.

If the OA conditions are above this value and the C7400S Sensor has a date code prior to 1301, the Economizer operation will not be able to be tested via this method.

2. Remove the sensor with the date code prior to 1301 and replace it with one with a date code after 1301.

3. Connect the new C7400S S-Bus Sensor to the S-Bus terminals (Brown or Gray) on the W7220A Jade using 18 AWG to 22 AWG solid or stranded wires.

4. Change the 3-position DIP switch on the C7400S sensor from 1 OFF, 2 OFF, 3 OFF to 1 ON, 2 ON, 3 ON position and immediately back to 1 OFF, 2 OFF 3 OFF position.

5. The output of the C7400S sensor to the W7220A will be 40ºF and 40 %RH which will allow the economizer to go into free cooling mode (economizing available).

6. Check the STATUS screen to make sure the OA Temperature and OA Humidity readings are present. This may take a minute to initialize.

6. The Economizer OA Damper should open on a call for First Stage Cooling.

8. After 15 minutes the C7400S Sensor will change back to the actual OA Temperature and Humidity.

***NOTE:** If you remove a Dry Bulb Sensor or earlier version of the Enthalpy Sensor for this test, remove the test C7400S and replace with the original sensor. For OA temperature be sure to reconnect wires to the OAT terminals.*

ALARMS

The Economizer module provides alarm messages that display on the 2-line LCD.

NOTE: Upon power up, the module waits 60 minutes before checking for alarms. This allows time for all the configured devices (e.g. sensors, actuator) to become operational. The

Manufacturer reserves the right to discontinue , or change at any time, specifications, design, and prices without notice and without incurring obligations.
Copyright MicroMetl Corporation 2017. All rights reserved.

exception is the MA sensor which will alarm immediately.

If one or more alarms are present and there has been no keypad activity for at least 5 minutes, the Alarms Menu displays and cycles through the active alarms. You can also navigate to the Alarms menu at any time.

Clearing Alarms:

Once the alarm has been identified and the cause has been removed (e.g. replaced faulty sensor), the alarm can be cleared from the display.

To clear an alarm, perform the following:

1. Navigate to the desired alarm using the ▲ (UP) and ▼ (DOWN) buttons.

2. Press the ↵ (ENTER) button.

3. ERASE? displays.

4. Press the ↵ (ENTER) button.

5. ALARM ERASED displays.

6. Press the button ⓘ (Menu Up/Exit) to complete the action and return to the previous menu.

7. Repeat steps 1 thru 5 for multiple alarms,

NOTE: If the alarm still exists after you clear it, it will redisplay within 5 seconds.

MicroMetl Indianapolis
3035 N. Shadeland Ave., Suite 300
Indianapolis, IN 46226
1.800.MMC.HVAC (EST)
indycustomerservice@micrometl.com

MicroMetl Longview
201 Kodak Blvd.
Longview, TX 75602
1.903.248.4800 (CST)
longviewcustomerservice@micrometl.com

MicroMetl Sparks
905 Southern Way
Sparks, NV 89431
1.800.884.4662 (PST)
sparkscustomerservice@micrometl.com

Manufacturer reserves the right to discontinue, or change at any time, specifications, design and prices without notice and without incurring obligations.
Copyright MicroMetl Corporation 2016. All rights reserved.

Form No. CD-HJ-C

Gas/Electric or Electric/Electric 1 or 2 Stage Cooling with Single or 2-Speed Indoor Fan Applications

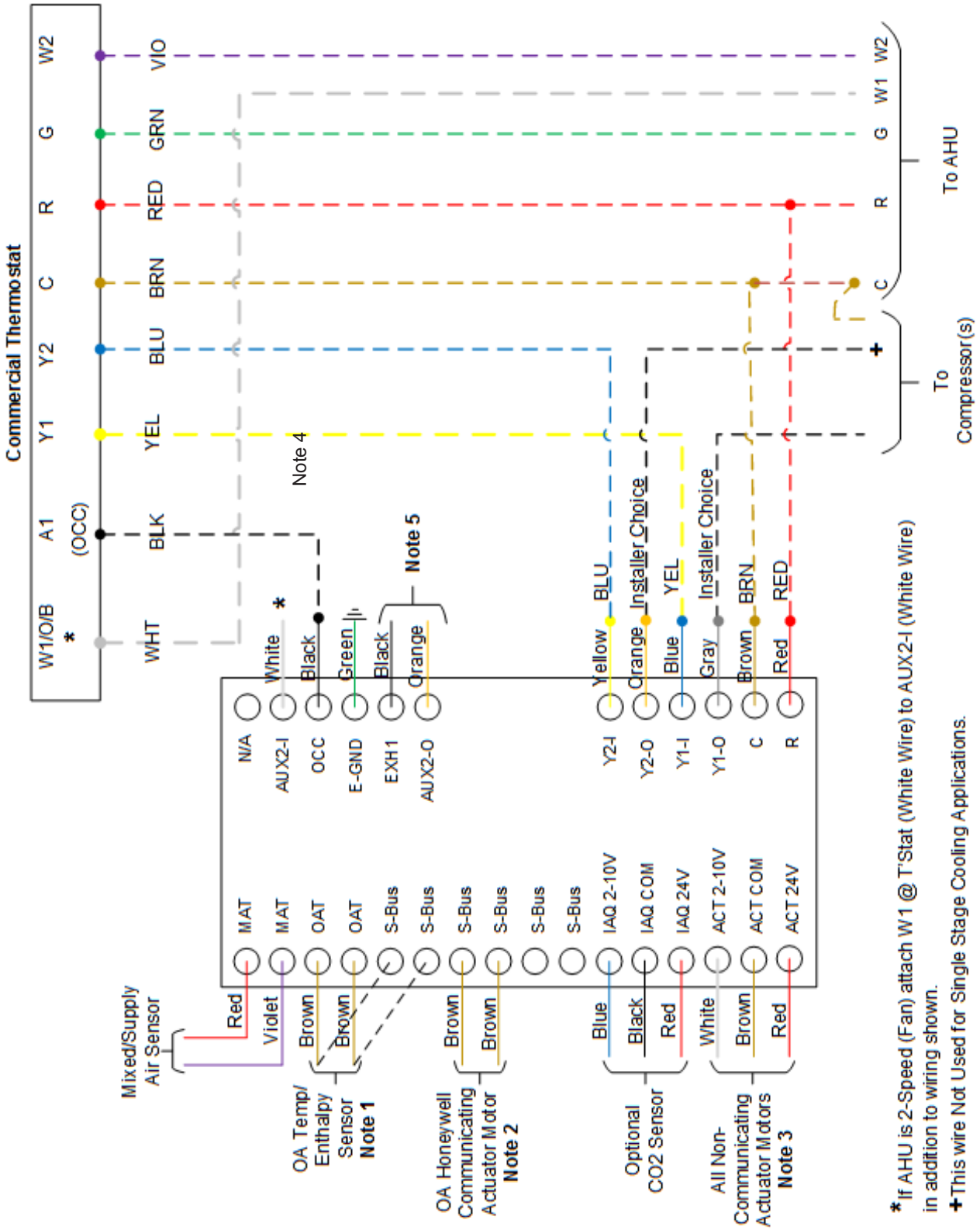

Manufacturer reserves the right to discontinue, or change at any time, specifications, design and prices without notice and without incurring obligations.
Copyright MicroMetl Corporation 2016. All rights reserved.

1 or 2 Stage Cooling Heat Pump with Single or 2-Speed Indoor Fan Applications

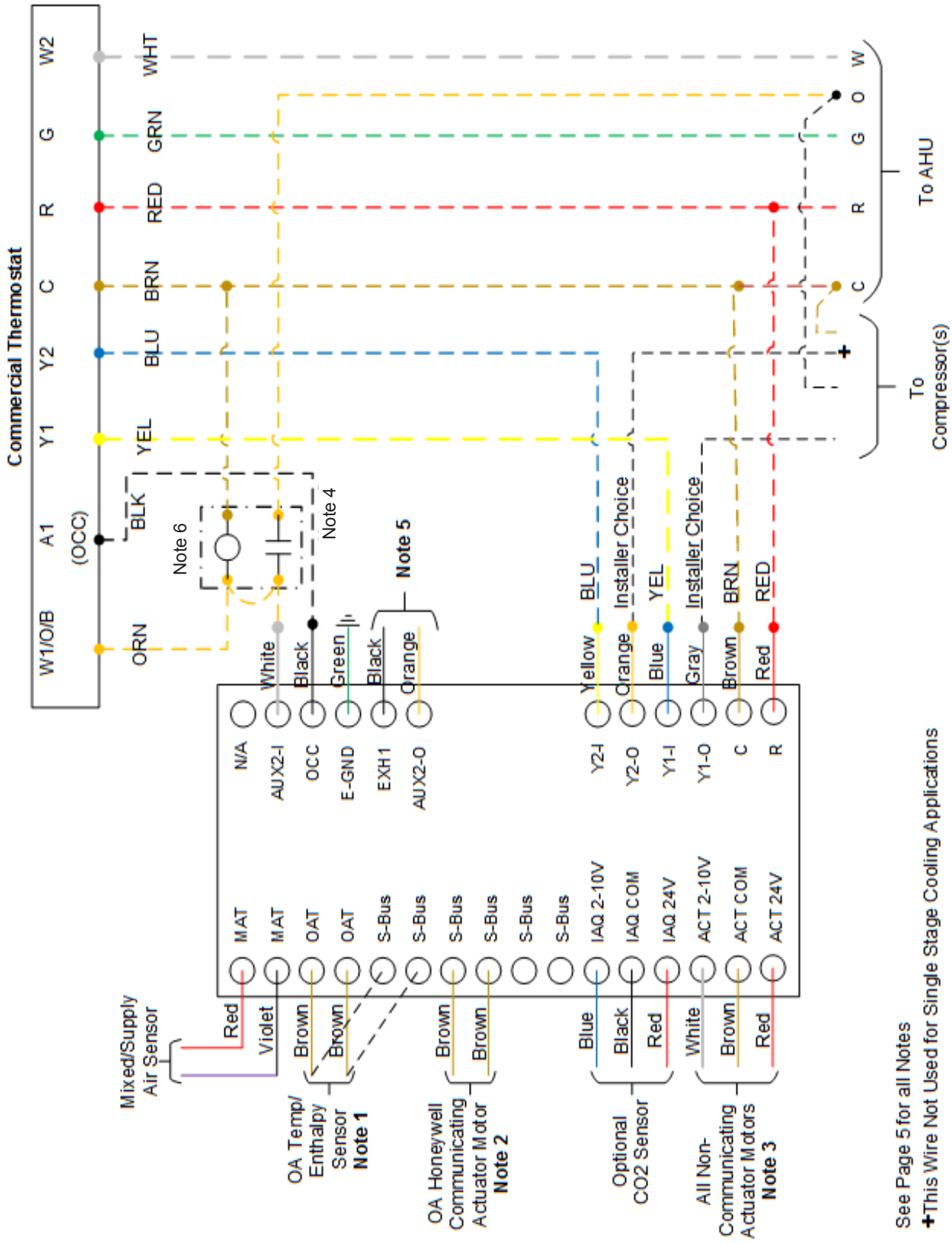

Manufacturer reserves the right to discontinue, or change at any time, specifications, design and prices without notice and without incurring obligations.
Copyright MicroMetl Corporation 2016. All rights reserved.

Single Stage Cooling Heat Pump with 2-Speed Indoor Fan Applications

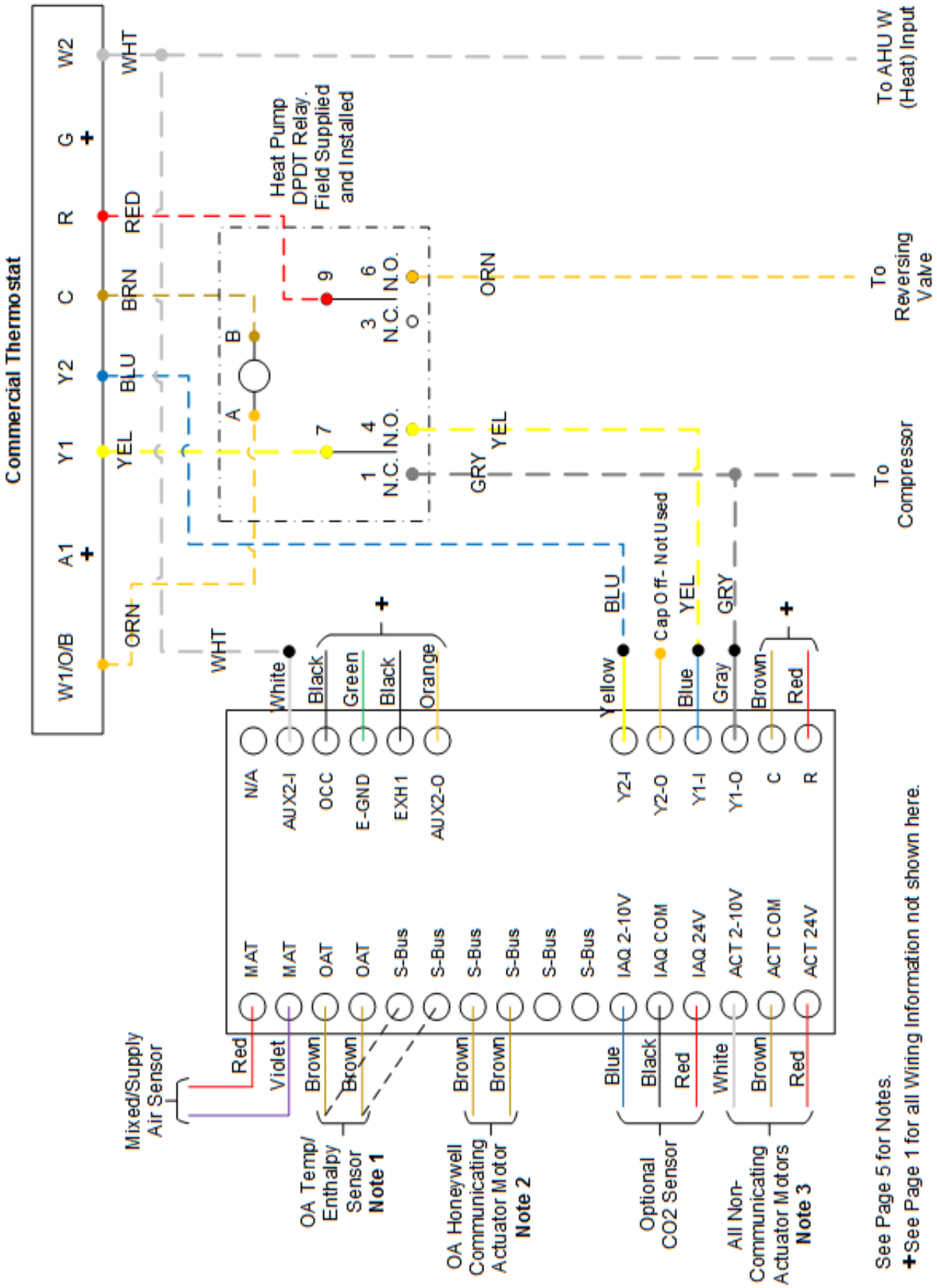

Manufacturer reserves the right to discontinue, or change at any time, specifications, design and prices without notice and without incurring obligations.
Copyright MicroMetl Corporation 2016. All rights reserved.

2 Stage Cooling Heat Pump with 2-Speed Indoor Fan Applications

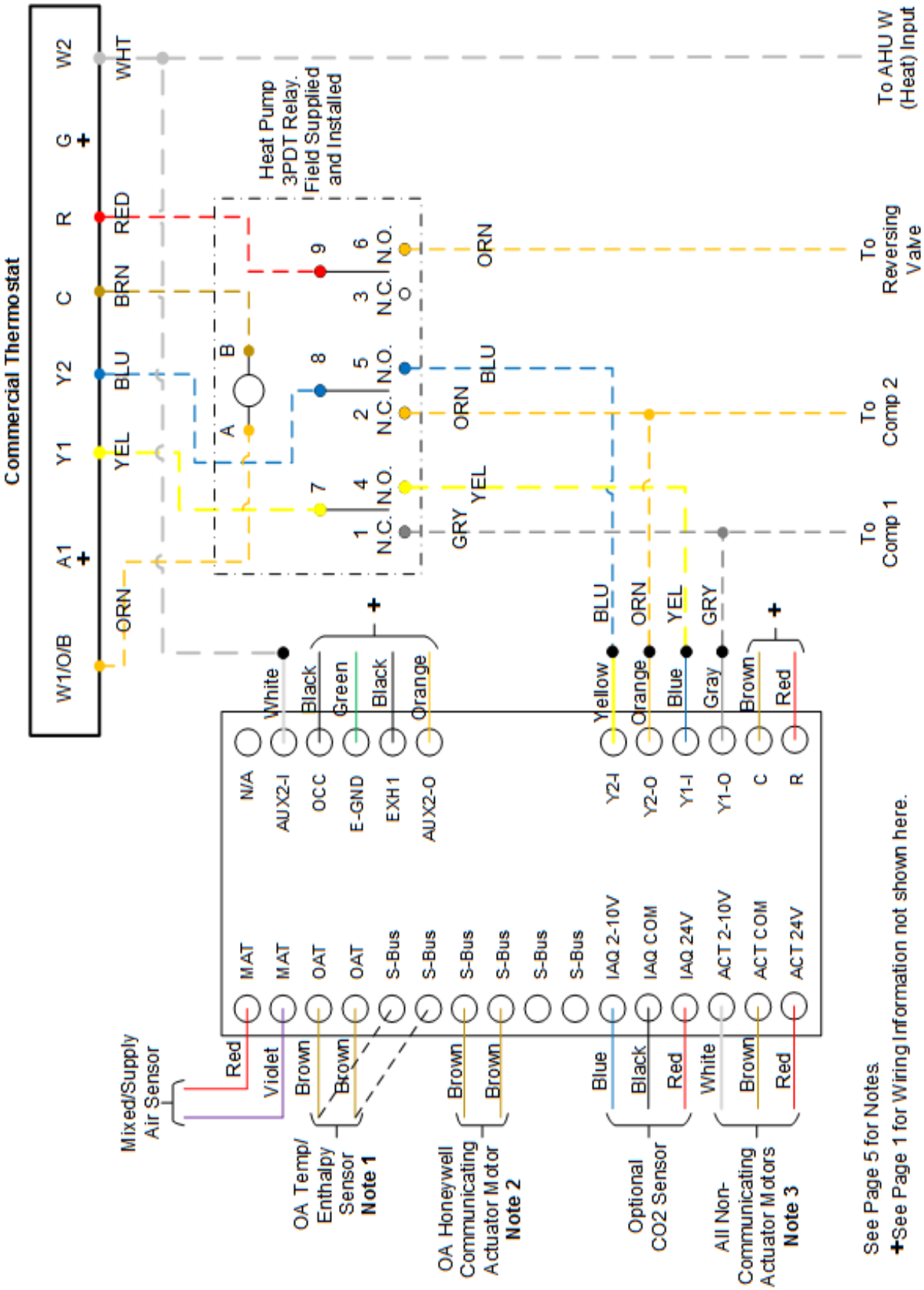

Manufacturer reserves the right to discontinue, or change at any time, specifications, design and prices without notice and without incurring obligations.
Copyright MicroMetl Corporation 2016. All rights reserved.

Note 1: When using Outdoor Enthalpy connect these wires to S-Bus.It may be necessary to extend these wires. If so cut and splice in 18 ga. 'Stat wire up to 200 Ft for C7250A Sensor, and up to 100 ft. for C7400S Sensor. For distances beyond 100 ft. Twisted Pair is recommended.

Note 2: For Communicating Actuators only, connect both S-Bus, and the 4-pin at ACT (Yellow) terminals to the OA Actuator. This connector will contain wires for the 24 VAC and 2-10 VDC outputs. For Non-Communicating Actuators (Return Air) connect the 4-pin (ACT 2-10, ACT COM, and ACT 24V) connector only.

Note 3: Use the Red, Brown, and White wires with the Honeywell RA Actuator and all Siemens & Belimo Actuators.

Note 4: Use Commercial Thermostat with Occupancy Control. If not available you may connect OCC to G if Fan is Programmed for Continuous ON during Occupied Periods. The control can also be programmed for Always Occupied.

Note 5: Power Exhaust and Programmable (AUX) Outputs. See Honeywell Product Data for more details.

Note 6: Due to possible feedback a Field Supplied and Installed Isolation Relay may be required to lock out the Economizer function during Defrost. Program the Thermostat and JADE Logic AUX2-I for Heat Pump O or B to match equipment Heat Pump operation.

See Honeywell Product Data 63-2700 for more details.

QR Code

Honeywell Product Data

MicroMetl Indianapolis
3035 N. Shadeland Ave., Suite 300
Indianapolis, IN 46226
1.800.MMC.HVAC (EST)
indycustomerservice@micrometl.com

MicroMetl Longview
201 Kodak Blvd.
Longview, TX 75602
1.903.248.4800 (CST)
longviewcustomerservice@micrometl.com

MicroMetl Sparks
905 Southern Way
Sparks, NV 89431
1.800.884.4662 (PST)
sparkscustomerservice@micrometl.com

Manufacturer reserves the right to discontinue, or change at any time, specifications, design and prices without notice and without incurring obligations.
Copyright MicroMetl Corporation 2016. All rights reserved.