WhisperGreen® Select
VENTILATION FAN

FV-0511VKS3

Specification Submittal Data / Panasonic Ventilation Fan (Multi-Speed module included)

Description

Customizable ceiling mount ventilating fan, low sone and rated for continuous operation. NGBS certified. ENERGY STAR® rated and certified by the Home Ventilating Institute (HVI). Evaluated by the Underwriters Laboratories and conforms to both UL and cUL standards.

Motor/Blower:

- Enclosed brushless ECM smart motor technology rated for continuous operation
- Adjustable ventilation rates at 30-110 CFM
- Power rating of 120 volts and 60 Hz
- UL and cUL listed for tub/shower enclosure when GFCI protected.
- Motor equipped with thermal cutoff fuse
- Removable permanently lubricated plug-in motor

Housing:

- Environmentally friendly 26 gauge housing using Zinc-Aluminum-Magnesium (ZAM) coating
- Built-in damper reduces back draft and helps with blower door testing
- Built-in metal flange provides blocking for penetrations through drywall as an Air Barrier, and assists with the decrease in leakage in the Building Envelope during blower door testing
- Suitable for installation in ceilings insulated up to R60
- Articulating and expandable installation bracket up to 24"

Grille:

- Elegant grille design complements the aesthetics of any room
- Attaches directly to housing with torsion springs
- Includes a motion sensor cap for use as a cover when the motion sensor Plug 'N Play® module has not been selected

Warranty:

- ECM Motor: 6 Years from original purchase date
- ALL Parts: 3 Years from original purchase date

Architectural Specifications:

Customizable ceiling mount ventilation fan, ENERGY STAR® rated with built-in 110/80/50 CFM speed selector and multi-speed module for 30-110 CFM Continuous Ventilation. Home Ventilating Institute (HVI) Certified at 0.1, 0.25, 0.375, and 0.5" w.g. at all speeds 30-40-50-60-70-80-90-100-110 CFM
6" Duct as Certified by the Home Ventilating Institute (HVI) – **ENERGY STAR MOST EFFICIENT 2024**
@ 0.1 w.g., 110/80/50 CFM with <0.3 sone and with energy efficient no more than 16.7/18.4/14.7 CFM/Watt
@ 0.25 w.g., 110/80/50 CFM with no more than 0.3/0.3/0.4 sones and with energy efficient no more than 9.3/8.8/7.2 CFM/Watt
@ 0.375 w.g., 110/80/50 CFM with energy efficient no more than 6.6/6.1/5.3 CFM/Watt
@ 0.5" w.g., 109/80/50 CFM with energy efficient no more than 4.8/4.6/4.0 CFM/Watt
Utilizing 4" Duct with 6" to 4" reducer as Certified by the Home Ventilating Institute (HVI) – **ENERGY STAR MOST EFFICIENT 2024**
@ 0.1 w.g., 110/80/50 CFM with <0.3 sone and with energy efficient no more than 11.5/14.2/13.5 CFM/Watt
@ 0.25 w.g., 110/80/50 CFM with no more than 0.8/0.7/0.6 sones and with energy efficient no more than 7.3/7.7/7.0 CFM/Watt
@ 0.375 w.g., 110/80/50 CFM with energy efficient no more than 5.3/5.4/5.0 CFM/Watt
@ 0.5" w.g., 104/80/50 CFM with energy efficient no more than 4.2/4.1/3.8 CFM/Watt
The motor shall be enclosed with brushless ECM motor engineered to run continuously. ECM motor speed shall automatically increase when the fan senses static pressure to maintain selected CFM. Power rating shall be 120v/60Hz. Plug 'N Play® modules provide additional features such as Condensation Sensor, SmartAction Motion Sensor, Dual Motion Sensor + Condensation Sensor and Wi-Fi Module. Fan shall be RoHS Compliant and UL and cUL listed for tub/shower enclosure when GFCI protected. Also suitable for installation in ceilings insulated up to R60. Fan can be used to comply with NGBS, ASHRAE 62.2, LEED, ENERGY STAR® IAP, EarthCraft, and California Title-24.

ECM Motor Technology:

When fan senses static pressure, its speed is automatically increased to ensure that the desired CFM is not compromised, which allows the fan to perform as rated.

FV-0511VKS3 4" or 6" duct

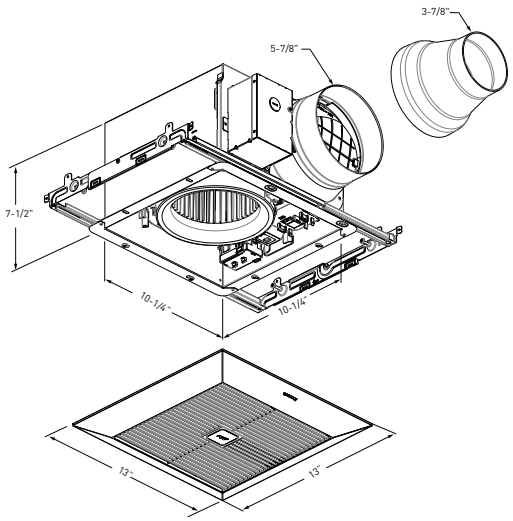

Performance Curve 6" duct

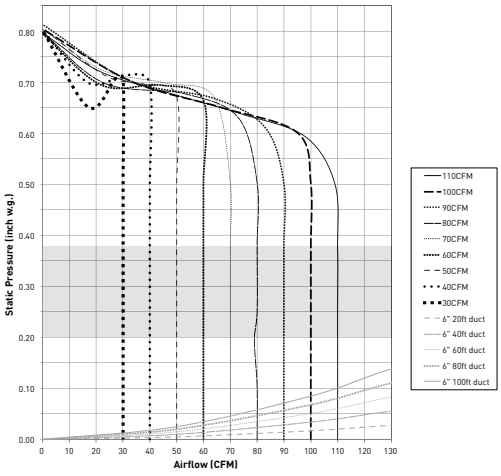

*Industry research indicates static pressure in typical installations ranges from 0.20" to 0.375"

Performance Curve 4" duct

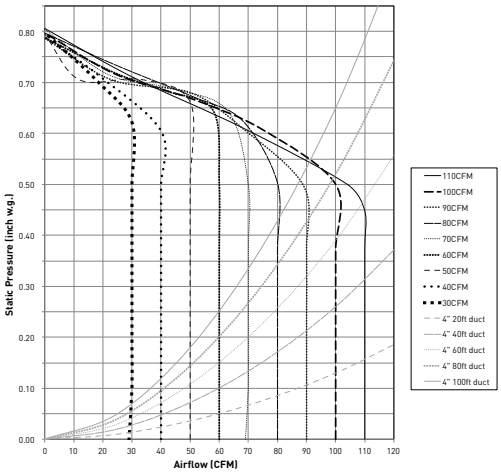

*Industry research indicates static pressure in typical installations ranges from 0.20" to 0.375"

Plug 'N Play™ Modules

Plug 'N Play™ modules provide up to **two** additional features (multi-speed is already built-in to FV-0511VKS2). Select from Motion Sensor and Condensation Sensor.



FV-VS15VK1: Multi-Speed with Time Delay

Allows you to select the proper CFM settings to satisfy ASHRAE 62.2 continuous ventilation requirements. The fan runs continuously at a pre-set lower level (0, 30-100 CFM, in 10 CFM increments), then elevates to a maximum level of operation (50-80-110 CFM) when the wall switch is turned on, or when the motion sensor or Condensation Sensor module is activated. A High/Low delay timer returns the fan to the pre-set CFM level after a period of time set by the user.



FV-MSVK1: Motion Sensor

Automatically activates when someone enters the room. Once the settings have been applied, the fan becomes truly automatic. This module also activates a 20 minute delay off timer for the fan.



FV-CSVK1: Condensation Sensor

Helps control bathroom condensation to prevent mold and mildew. Sensor technology detects relative humidity and temperature to anticipate dew point, automatically turning the fan on to control humidity. Built-in Relative Humidity (RH) sensitivity adjustment enables fine tuning for moist conditions and for satisfying CalGreen requirements. When the condensation sensor is used in conjunction with multi-speed functionality, the fan will kick up to high speed when the condensation sensor detects moisture in the room. This module also activates a 20 minute delay off timer for the fan.

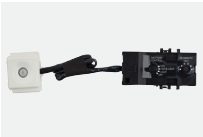

FV-CMVK3: Smart Action® Motion Sensor + Condensation Sensor

Turns the base fan on or boosts to higher speed when condensation or motion are detected. Installer / User can choose the desired operation, thanks to advanced automation. Only one slot is required.



WP100PBA: Smart WiFi® Module

The Wi-Fi control module connects, monitors and controls through Wi-Fi the ventilation fan's features (motion sensor, light, etc.) with the Swidget app.

WhisperGreen® Select
VENTILATION FAN

FV-0511VKS3

WhisperGreen® Select (Fan Only): FV-0511VKS3																																							
Duct Diameter (inches)	6"																																							
Static Pressure in inches w.g.	0.1	0.25	0.375	0.5	0.1	0.25	0.375	0.5	0.1	0.25	0.375	0.5	0.1	0.25	0.375	0.5	0.1	0.25	0.375	0.5	0.1	0.25	0.375	0.5	0.1	0.25	0.375	0.5	0.1	0.25	0.375	0.5	0.1	0.25	0.375	0.5	0.1	0.25	0.375	0.5
Air Volume (CFM)	110	110	110	109	100	100	100	100	90	90	90	90	80	80	80	80	70	70	70	70	60	60	60	60	50	50	50	50	40	40	40	40	30	30	30	30				
Noise (sones)	<0.3	0.3	---	---	<0.3	0.3	---	---	<0.3	0.3	---	---	<0.3	0.3	---	---	<0.3	0.3	---	---	<0.3	0.3	---	---	<0.3	0.4	---	---	<0.3	<0.3	---	---	<0.3	<0.3	---	---				
Power Consumption (watts)	6.7	12.1	17.0	23.0	5.5	10.5	15.4	20.5	4.9	9.7	14.3	19.3	4.4	9.2	13.2	17.6	4.0	8.2	12.2	16.3	3.6	7.4	11.1	15.0	3.4	7.0	9.9	13.3	3.0	6.2	8.7	12.0	2.8	5.5	7.9	11.4				
Energy Efficiency (CFM/Watt)	16.7	9.3	6.6	4.8	18.5	9.8	6.6	5.0	18.4	9.5	6.5	4.7	18.4	8.8	6.1	4.6	17.7	8.7	5.9	4.4	16.8	8.2	5.5	4.2	14.9	7.2	5.3	4.0	13.6	6.6	4.7	3.6	10.8	5.7	4.0	3.2				
Speed (RPM)	595	887	1089	1261	580	892	1097	1260	572	898	1102	1283	569	908	1109	1281	565	902	1121	1283	570	906	1120	1293	575	933	1127	1296	563	921	1126	1294	587	930	1123	1300				
Amps (Current)	0.11	0.20	0.27	0.36	0.10	0.18	0.25	0.32	0.09	0.17	0.24	0.31	0.08	0.16	0.22	0.28	0.08	0.14	0.20	0.27	0.07	0.13	0.19	0.24	0.07	0.12	0.17	0.22	0.06	0.11	0.15	0.20	0.06	0.10	0.14	0.19				
MAX. Amps (Current)	0.36																																							
ENERGY STAR Qualified	Yes																																							

WhisperGreen® Select (Fan Only): FV-0511VKS3																																							
Duct Diameter (inches)	4"																																							
Static Pressure in inches w.g.	0.1	0.25	0.375	0.5	0.1	0.25	0.375	0.5	0.1	0.25	0.375	0.5	0.1	0.25	0.375	0.5	0.1	0.25	0.375	0.5	0.1	0.25	0.375	0.5	0.1	0.25	0.375	0.5	0.1	0.25	0.375	0.5	0.1	0.25	0.375	0.5	0.1	0.25	0.375	0.5
Air Volume (CFM)	110	110	110	104	100	100	100	100	90	90	90	89	80	80	80	80	70	70	70	70	60	60	60	60	50	50	50	50	40	40	40	40	30	30	30	30				
Noise (sones)	<0.3	0.8	---	---	<0.3	0.7	---	---	<0.3	0.7	---	---	<0.3	0.7	---	---	<0.3	0.7	---	---	<0.3	0.7	---	---	<0.3	0.6	---	---	<0.3	0.6	---	---	<0.3	0.6	---	---				
Power Consumption (watts)	9.7	15.2	21.0	24.7	7.8	13.0	18.0	23.5	6.6	11.6	16.2	21.0	5.6	10.6	14.7	19.4	5.1	9.3	13.4	17.0	4.4	8.1	11.7	15.5	3.8	7.3	10.4	13.6	3.4	6.3	9.3	12.0	2.9	5.6	8.4	11.5				
Energy Efficiency (CFM/Watt)	11.5	7.3	5.3	4.2	12.9	7.8	5.6	4.3	13.6	7.7	5.6	4.2	14.2	7.7	5.4	4.1	14.0	7.6	5.3	4.2	13.8	7.6	5.2	3.9	13.5	7.0	5.0	3.8	12.9	6.9	4.6	3.6	10.5	5.7	3.8	3.0				
Speed (RPM)	782	1031	1214	1349	747	1007	1189	1349	714	993	1170	1333	684	985	1166	1340	672	964	1164	1317	654	956	1148	1324	630	946	1145	1313	619	938	1142	1299	606	939	1141	1304				
Amps (Current)	0.16	0.24	0.33	0.38	0.14	0.22	0.29	0.37	0.12	0.20	0.26	0.33	0.10	0.18	0.24	0.31	0.09	0.16	0.22	0.27	0.08	0.14	0.19	0.25	0.07	0.13	0.17	0.22	0.66	0.11	0.16	0.20	0.58	0.10	0.14	0.19				
MAX. Amps (Current)	0.66																																							
ENERGY STAR Qualified	Yes																																							

Model	Quantity	Comments	Project:
			Location:
			Architect:
			Engineer:
			Contractor:
			Submitted by:
			Date:

For complete Installation Instructions visit **na.panasonic.com/us/iaq**

Panasonic
IAQ Division
Two Riverfront Plaza
Newark, NJ 07102

na.panasonic.com/us/iaq

Home Innovation NGBS GREEN CERTIFIED

Design and specifications subject to change without notice.

Panasonic

IAQ24025ST
R2