Panasonic®

INSTALLATION INSTRUCTIONS

English

Ventilating Fan

WhisperGreen *Select*®

Model No. FV-0511VKS3S
FV-0511VKS3
FV-0511VK3
FV-1115VK3

Representative models:

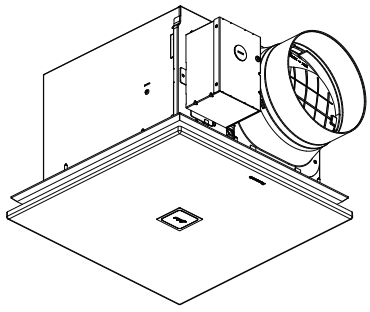

FV-0511VKS3S

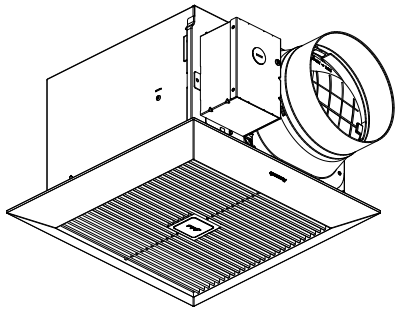

FV-0511VKS3 FV-0511VK3
FV-1115VK3

Contents

IMPORTANT SAFETY INFORMATION.....2-3
PLEASE READ PRIOR TO INSTALLING THIS FAN.....4
DESCRIPTION.....4
UNPACKING.....4
SUPPLIED ACCESSORIES AND DIMENSIONS.....5-6
WIRING DIAGRAM.....7
FEATURES.....7
INDICATIONS (Plug 'N Play™ FUNCTION DEVICES).....8-10
INSTALLATION (Plug 'N Play™ FUNCTION DEVICES).....10
INSTALLATION (CEILING MOUNTING).....11-14
INSTALLATION (WALL MOUNTING).....14-16
INSTALLATION (RETROFIT).....16-17
MAINTENANCE (CLEANING).....17-18
PRACTICAL GUIDE TO INSTALLATION.....18
SPECIFICATIONS.....19-20
PRODUCT SERVICE.....20

READ AND SAVE THESE INSTRUCTIONS

Thank you for purchasing this Panasonic product.
Please carefully read the section "IMPORTANT SAFETY INFORMATION".
Failure to comply with instructions could result in personal injury or property damage. Please explain to users how to operate and maintain the product after installation and present this manual to users. Please retain this manual for future reference.

15VK30420

IMPORTANT SAFETY INFORMATION

For your safety

To reduce the risk of injury, loss of life, electric shock, fire, malfunction, and damage to equipment or property, always observe the following safety precautions.

Explanation of symbol word panels

The following symbol word panels are used to classify and describe the level of hazard, injury, and property damage caused when the denotation is disregarded and improper use is performed.

⚠ WARNING	Denotes a potential hazard that could result in serious injury or death.
⚠ CAUTION	Denotes a hazard that could result in minor injury.
NOTICE	Denotes a hazard that could result in property damage.

The following symbols are used to classify and describe the type of instructions to be observed.

	This symbol is used to alert users to a specific operating procedure that must be followed in order to operate the unit safely.
	This symbol is used to alert users to a specific operating procedure that must not be performed.
	This symbol is used to alert users not to disassemble the equipment.
	This symbol is used to alert users to make sure of grounding when using the equipment with the grounding terminal.

⚠ WARNING

TO REDUCE THE RISK OF FIRE, ELECTRIC SHOCK OR INJURY TO PERSONS, OBSERVE THE FOLLOWING:

- Use this unit only in the manner intended by the manufacturer. If you have any questions, contact the manufacturer.
- Before servicing or cleaning unit, switch power off at service panel and lock the service disconnecting means to prevent power from being switched on accidentally. When the service disconnecting means cannot be locked, securely fasten a prominent warning device, such as a tag, to the service panel.
- Installation work and electrical wiring must be done by qualified person(s) in accordance with all applicable codes and standards, including fire-rated construction.
- Sufficient air is needed for proper combustion and exhausting of gases through the flue (chimney) of fuel burning equipment to prevent backdraft. Follow the heating equipment manufacturer's guideline and safety standards such as those published by the National Fire Protection Association (NFPA), and the American Society for Heating, Refrigeration and Air Conditioning Engineers (ASHRAE) and the local code authorities.
- When cutting or drilling into wall or ceiling, do not damage electrical wiring or other hidden utilities.
- Ducted exhaust fans must always be vented to the outdoors.
- If this unit is to be installed over a tub or shower, it must be marked as appropriate for the application and be connected to a GFCI (Ground Fault Circuit Interrupter) protected branch circuit.
- Do not use replacement parts that have not been recommended by the manufacturer (e.g. parts made at home using 3D printer).
- This product must be properly grounded.
- Do not use this unit with any solid-state speed control device. Solid state controls may cause harmonic distortion which can cause a humming noise in the motor.

IMPORTANT SAFETY INFORMATION

Do not disassemble the unit for reconstruction. It may cause fire or electric shock.

Install the fan at least 1.5 m (5 feet) above the floor.

⚠ CAUTION

Follow all local electrical and safety codes, as well as the National Electrical Code (NEC) and the Occupation Safety and Health Act (OSHA), using UL approved wire nuts.

Make sure that the electric service supply voltage is AC 120V, 60Hz.

The special-purpose or dedicated parts, such as mounting fixtures, must be used if such parts are provided.

Please wear gloves to protect hands during installation.

Do not install this ventilating fan where interior room temperature may exceed 104°F (40°C).

For general ventilating use only. Do not use to exhaust hazardous or explosive materials and vapors.

Do not kink the supply wiring.

NOTICE

Provide make up air for proper ventilation.

Do not connect multiple units in parallel. If two or more units are connected to one switch in parallel, the unit may not function.

Do not install fan above or inside 45-degree angle projected outwards from the cooking equipment element closest to fan (Fig. A).

Do not install the unit where ducts are configured as shown (Fig. B).

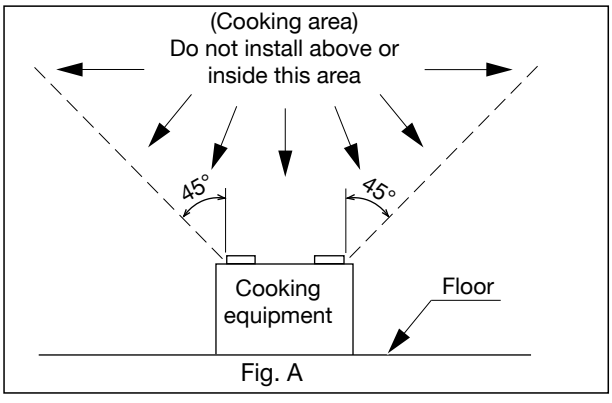

Fig. A

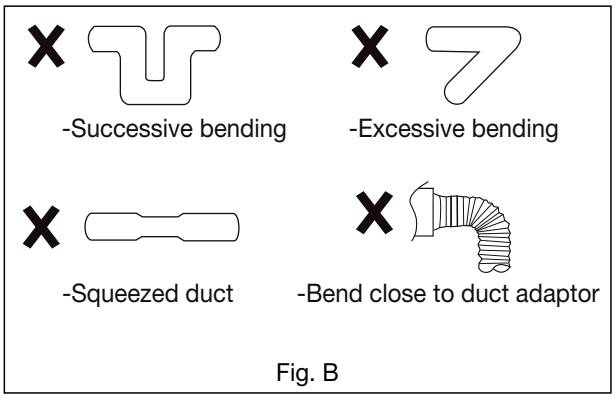

Fig. B

PLEASE READ PRIOR TO INSTALLING THIS FAN

Continuous ventilation: These fans are designed to run continuously ensuring a healthy environment at low CFM levels 24 hours a day. By utilizing the optional Multi-Speed module, the fans are built to run continuously at a pre-set lower level (FV-0511VKS3S, FV-0511VKS3 and FV-0511VK3: 0, 30, 40, 50, 60, 70, 80, 90, 100 CFM; FV-1115VK3: 0, 50, 60, 70, 80, 90, 100, 110, 120 CFM). The setting is dependent on the size of the house and the individual wishes of the homeowner. It is crucial that the installer pre-sets the lower setting during the installation. Please refer to the chart below and Multi-speed module on page 8.

Custom vent Multi-Speed module (Lower Setting). ASHRAE 62.2-2022

(sq.feet)	Two Bedrooms	Three Bedrooms	Four Bedrooms	Five Bedrooms
< 500	38	45	53	60
501-1000	53	60	68	75
1001-1500	68	75	83	90
1501-2000	83	90	98	105
2001-2500	98	105	113	120
2501-3000	113	120	128	135
3001-3500	128	135	143	150
3501-4000	143	150	158	165
4001-4500	158	165	173	180
4501-5000	173	180	188	195

Spot ventilation: These fans are also built to take care of the homeowner's spot ventilation needs when the room is occupied. The basic fan models allow a choice of three speeds. When fans are equipped with the optional Multi-Speed module, these models increase to a maximum level of 150 CFM for the FV-1115VK3 and 110 CFM for FV-0511VKS3S, FV-0511VKS3 and FV-0511VK3 either when the switch is turned on, or activated by the optional Condensation Sensor module (FV-CSVK1) or the optional Motion Sensor module (FV-MSVK1).

A High/Low Delay Timer, located inside the fan unit, is utilized to return the fan back to the pre-set continuous ventilation mode. The installer needs to consult with the homeowner for the desired setting on the timer (0 - 60 minutes) and make the adjustments during the installation.

DESCRIPTION

These products are listed by UL under UL file No. E78414.
This product use a sirocco fan driven by a DC motor powered by an integral transformer. The motor is designed to have long operating life, high dynamic response, higher speed ranges and energy savings.The grille covering the fan body is a spring-attached, quick removal type. A damper for preventing air counter flow is provided. The blower uses a high-capacity sirocco fan developed to reduce the noise level.

UNPACKING

Unpack and carefully remove the unit from packing.
Refer to the Supplied Accessories list to verify that all parts are present.

SUPPLIED ACCESSORIES AND DIMENSIONS

For Models.- FV-0511VKS3, FV-0511VK3, FV-1115VK3

Part name	Appearance	Quantity
Grille		1
Flex-Z Fast® bracket (with 4 tapping screws -ST4.2X20)	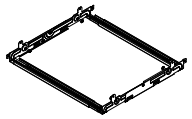	1

Part name	Appearance	Quantity
Warranty sheet & Installation instructions		1
Self-drilling screw		4
4 inch duct reducer (optional part), not included for FV-1115VK3	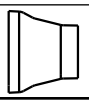	1

Unit: inches (mm)

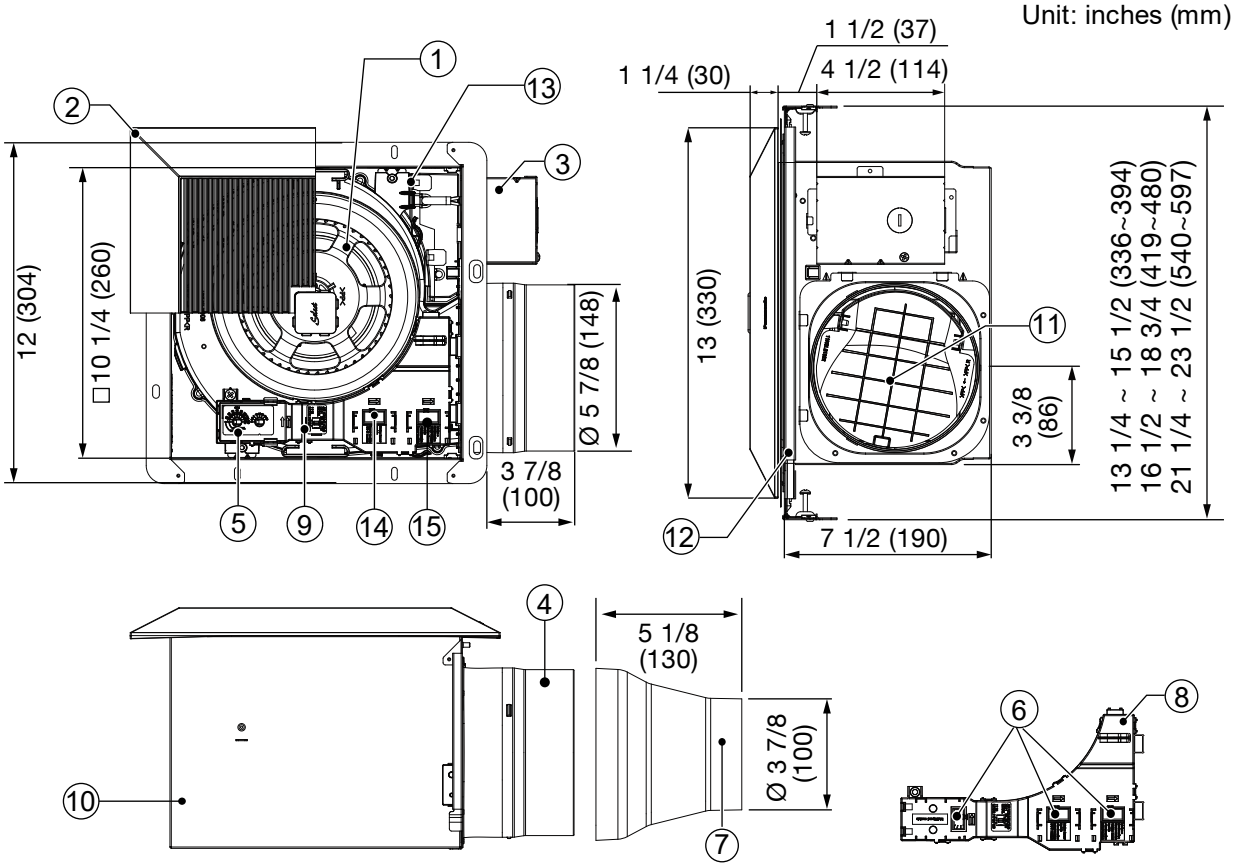

No	Part name	No	Part name
①	Blade	⑧	Main PCB box
②	Grille	⑨	Pick-A-Flow® switch
③	Junction box	⑩	Fan body
④	Adapter	⑪	Damper
⑤	Multi-Speed module (FV-0511VKS3 and FV-0511VKS3S only, not included in other models)	⑫	Flex-Z Fast® bracket
		⑬	Power PCB
⑥	Connector cover	⑭	Motion sensor location (FV-MSVK1, not included), Condensation sensor location (FV-CSVK1, not included) or Wi-Fi module location (WP100PBA, not included)
⑦	4 Inch duct reducer (optional part), not included for FV-1115VK3	⑮	Motion sensor location (FV-MSVK1, not included), Condensation sensor location (FV-CSVK1, not included)

SUPPLIED ACCESSORIES AND DIMENSIONS

For model.- FV-0511VKS3S

Part name	Appearance	Quantity
Grille	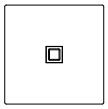	1
Flex-Z Fast® bracket (with 4 tapping screws -ST4.2X20)	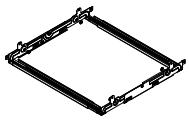	1

Part name	Appearance	Quantity
Warranty sheet & Installation instructions		1
Self-drilling screw		4
4 inch duct reducer (optional part)		1

Unit: inches (mm)

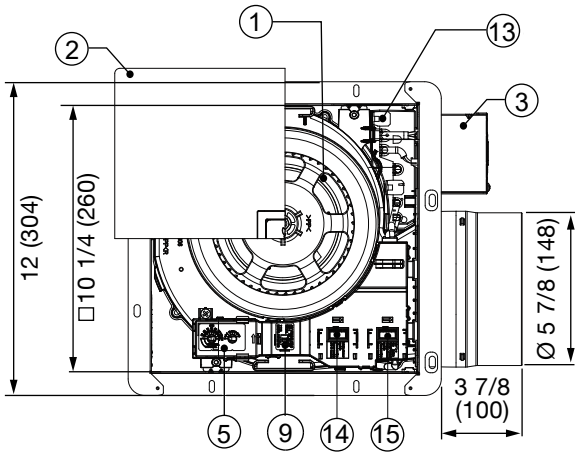

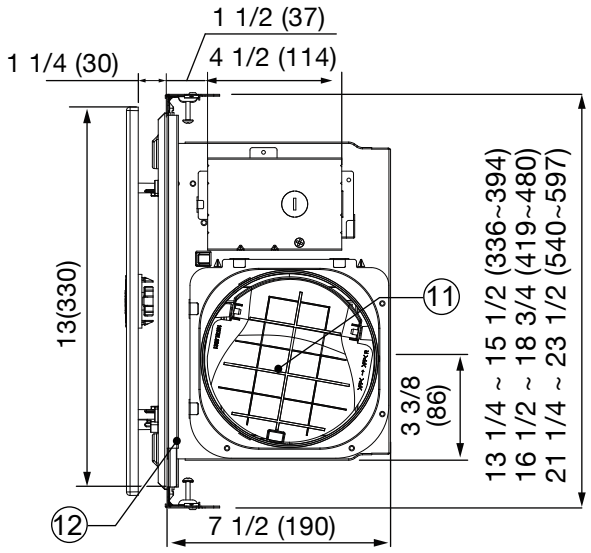

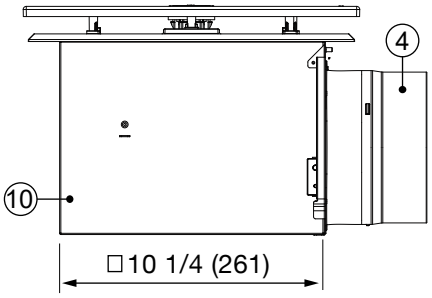

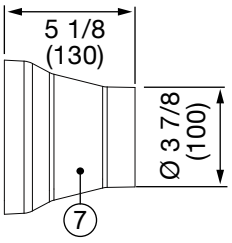

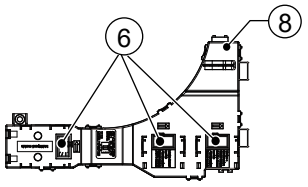

No	Part name	No	Part name
①	Blade	⑧	Main PCB box
②	Grille	⑨	Pick-A-Flow® switch
③	Junction box	⑩	Fan body
④	Adapter	⑪	Damper
		⑫	Flex-Z Fast® bracket
⑤	Multi-Speed module	⑬	Power PCB
		⑭	Motion sensor location (FV-MSVK1, not included) Condensation sensor location (FV-CSVK1, not included) or Wi-Fi module location (WP100PBA, not included)
⑥	Connector cover		
⑦	4 Inch duct reducer (optional part)	⑮	Motion sensor location (FV-MSVK1, not included) Condensation sensor location (FV-CSVK1, not included)

WIRING DIAGRAM

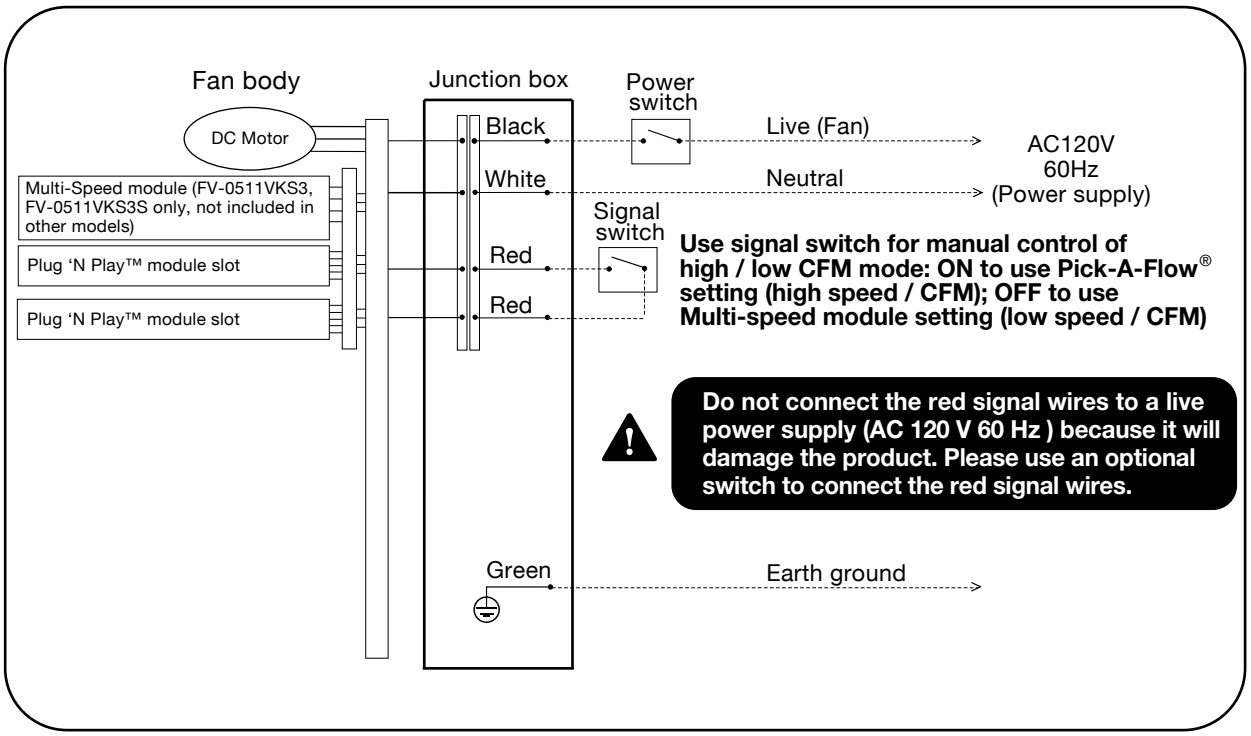

FEATURES

Optimum ventilation performance:
Duct length, elbows and other factors increase static pressure which can hinder the performance of most ventilation fans. This fan utilizes Smart Flow microchip technology that monitors the static pressure in the system and speeds up or slows down the RPM of the fan depending upon the amount of resistance within the ducts. This feature allows the fan to perform as rated and avoid potential installation issues.

Outstanding Energy Savings:
The WhisperGreen Select® line of fans are built using DC motor technology. The DC motor is 30% - 70% more energy efficient than the minimum ENERGY STAR requirements.

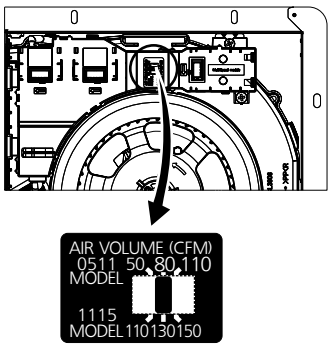

Pick-A-Flow® switch

Pick-A-Flow® Feature
All the WhisperGreen Select® base models of fans come with Pick-A-Flow® speed options. The Pick-A-Flow® switch on the face of all WhisperGreen Select® fans allows the option to choose 50 – 80 – 110 CFM for the FV-0511VKS3S, FV-0511VKS3, FV-0511VK3 or 110 – 130 – 150 CFM for the FV-1115VK3. These fans can run continuously or intermittently, depending upon the needs of the owner.

Model No.	Air volume (CFM)			Factory setting
FV-0511VKS3S FV-0511VKS3 FV-0511VK3	50	80	110	80 CFM
FV-1115VK3	110	130	150	130 CFM

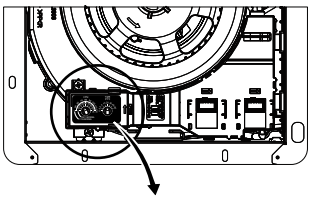





FV-VS15VK1

Note.- There is ONLY ONE Plug 'N Play™ slot to insert the Multi-Speed module.

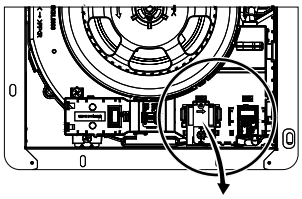





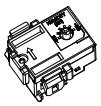

FV-CSVK1

Note.- There are TWO Plug 'N Play™ slots to insert the condensation module.See page 10 for details.

Plug 'N Play™ Modular Component Accessories Sold Separately, Not Included With Base Model Fan

■ FV-VS15VK1 Multi-Speed module allows the fan to run continuously at lower speeds to maintain ventilation standards to meet Indoor Air Quality and then boost up to high speed to meet intermittent needs for 'Spot' or 'Point Source' exhaust needs. The FV-VS15VK1 Modular Component will operate for both the FV-0511VK3 and the FV-1115VK3 matching the appropriate Multi-Speed setting shown below. Multi-speed module FV-VS15VK1 is included for models FV-0511VKS3S and FV-0511VKS3. It is not necessary to purchase this component. Note the options on the face of the FV-VS15VK1 Multi-Speed module to choose appropriate levels of airflow (CFM) and time delay before returning back to low speed (TIME). Choosing the Pick-A-Flow® setting automatically adjusts the Multi-Speed setting accordingly. As an example, if the Pick-A-Flow® Multi-speed setting is 80 CFM, the Multi-Speed settings adjust automatically to be 0, 30, 40, 50, 60 or 70 CFM at the lower speeds. The fan will 'boost' to the 80 CFM speed as the high speed setting. Selecting a particular TIME option will cause the fan to run for the selected amount of time before returning to the lower speed setting chosen on the CFM dial.

Model no	Pick-A-Flow®(CFM)	Multi-Speed Air volume (CFM)								
FV-0511VKS3S, FV-0511VKS3 FV-0511VK3 (plug-in FV-VS15VK1)	50	0	30	40	40	40	40	40	40	40
	80	0	30	40	50	60	70	70	70	70
	110	0	30	40	50	60	70	80	90	100
FV-1115VK3 (plug-in FV-VS15VK1)	110	0	50	60	70	80	90	100	100	100
	130	0	50	60	70	80	90	100	110	110
	150	0	50	60	70	80	90	100	110	120

Delay Time (min)	0	0.5	5	10	20	30	45	60

Factory setting: 20 minutes.
Delay Time position "0": Manual wall switch control is 0 minutes; without manual wall switch control is 0.5 minutes.

■ FV-CSVK1 Condensation Sensor module turns the base fan on or boosts to higher speed when humidity is detected when used in combination with the FV-VS15VK1. The Condensation Sensor works based on calculations from the Psychrometric Chart, or combination of Relative Humidity (RH) and Temperature. This allows the fan to anticipate the formation of condensation and automatically turn ON when needed to expel humid air. The Condensation Sensor is pre-set to run for 20 minutes; it will then check the RH and Temperature to detect if the fan needs to run for another 20 minutes cycle.

This product can set air volume by Pick-A-Flow® switch, set humidity by the induction humidity setting switch, and operate as below.

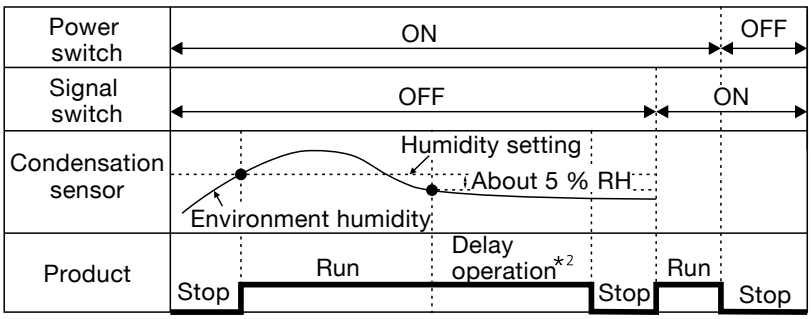



Induction humidity setting switch

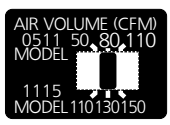

Pick-A-Flow® switch

* 2 The product will continue to run for about 20 minutes until it detects the environment humidity is about 5% RH lower than the humidity setting, then it will stop running.

Note:
1. When the humidity sensor is used in combination with the multi-speed, the delay time can be selected as needed.
2. The product will start running when the environment humidity rises rapidly (even if the humidity set point is not reached yet) and will stop after 20 minutes.
3. Induction humidity setting switch is stepless change between 30 %RH ~ 80 %RH.
4. The humidity detected by sensor may differ from the value on your hygrometer.
5. The product may turn ON and OFF due to the unstable environment humidity, but it can be improved by adjusting the Humidity setting selector.

INDICATIONS (Plug 'N Play™ FUNCTION DEVICES)

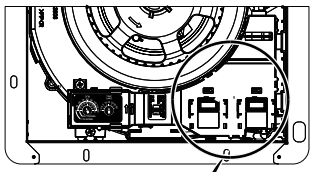

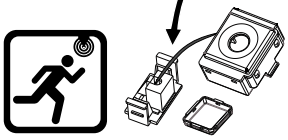

Note.- There are TWO Plug 'N Play™ slots to insert the motion sensor module. See page 10 for detail.

■ FV-MSVK1 Motion Sensor module turns the base fan on or boosts to higher speed when motion is detected when used in combination with the FV-VS15VK1. The Motion Sensor is pre-set to run for 20 minutes; it will then re-check for movement; if detected, the fan will run for another 20 minutes cycle. The Motion Sensor detects within the range shown below.

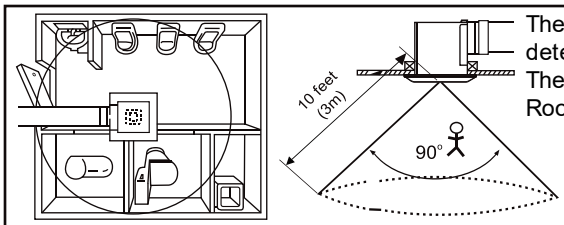

The distance that motion can be detected is limited to 10 feet (3 m). The field of view of the sensor is 90º. Room temperature is 77 ºF (25 ºC).

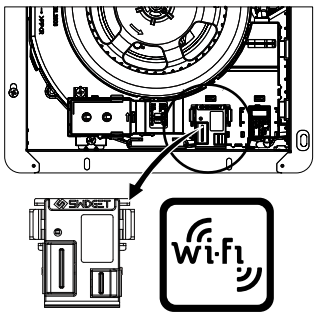

■ WP100PBA Swidget® Wi-Fi control module

Wi-Fi Plug 'N Play™ features
• Wireless Plug 'N Play™ control module for Panasonic WhisperGreen Select®.
• Connect and control Panasonic ventilation products with the Swidget iOS or Android app through 2.4 GHz Wi-Fi.
• Connect, group and balance Panasonic ventilation products with a dedicated Swidget commissioning iOS or Android application through Bluetooth 5.0 mesh.

Swidget app features
• Control the boost mode of all compatible Panasonic ventilation products with an always-ON or 20-40-60 minute timer.
• Control the light module and view the motion and condensation module status of compatible Panasonic WhisperGreen Select® models.
• View the supply air and exhaust air CFM, temperature and humidity of compatible Panasonic ventilation products.
• Receive notifications for faults, filter replacement and filter cleaning for compatible Panasonic ventilation products.
• Monitor the energy consumption of compatible Panasonic ventilation products.

SCAN QR CODE FOR Wi-Fi MODULE'S INSTRUCTION OR VISIT WEB SITE

http://WP100PBA-QR.swidget.com
www.swidget.com

NOTICE

This module must only be installed and used with an approved/certified Swidget wiring device. Usage with any other devices is not permitted and will result in the warranty becoming void.

⚠ WARNING

• While not required, it is recommended to avoid any risk of shock or death, turn off power at the circuit breaker or fuse and test that the power is off before installing or removing any module.
• Not for use to control medical or life support equipment.
• For INDOOR use only: 0°C - 40°C (32°F - 104°F).
• Module can only be installed in one orientation. Rear alignment pins prevent incorrect installation. Do not forcibly install an module.
• Requires a wireless router and Internet connection for device setup.
• Double check any external Wi-Fi settings for accuracy before using them.
• Actual wireless performance in a home depends on the numbers of walls / obstacles between the module and wireless router.

INDICATIONS (Plug 'N Play™ FUNCTION DEVICES)

The Plug 'N Play™ modules can be used in combination, in order to adapt the fan operation to the user's needs. Please refer to the table below for details.

Plug 'N Play™ modules combination	Fan operation with Plug 'N Play™ modules' combinations		
	Step 1) Not detected 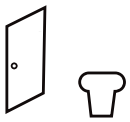 Empty	Step 2) Sensor trigger detection Motion OR Condensation 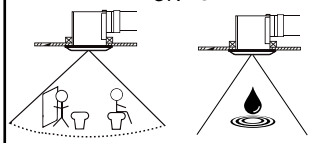 Inside	Step 3) Not detected 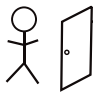 Outside
 FV-MSVK1 + FV-VS15VK1	When motion is not detected, the fan runs on low speed.(2)	Boosts the fan to high speed when motion is detected.	The fan will automatically return to low speed(2) after the set delay time.
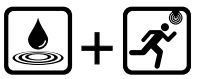 FV-CSVK1 + FV-MSVK1	When humidity is about 5% R. H. below the set point AND motion is not detected, the fan stays OFF.	Turns the fan ON for 20 minutes when motion is detected OR humidity is about 5% R. H. above the set point.	The fan will run on high speed until humidity decreases to about 5% R. H. below the set point AND 20 minutes afterwards, the fan will automatically turn OFF.
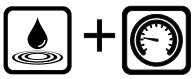 FV-CSVK1 + FV-VS15VK1	When humidity is below the set point, the fan runs on low speed.(2)	Boosts the fan to high speed when humidity is about 5% R. H. above the set point.	The fan will run on high speed until humidity decreases to about 5% R. H. below the set point AND, after the set delay time has passed, it will automatically return to low speed.(2)

(2) When the low speed is set to 0 CFM on the multi-speed module, the fan stops running.

INSTALLATION (Plug 'N Play™ FUNCTION DEVICES)

※ You can purchase the specified Plug 'N Play™ device which are explained on page 8 through 11 and installed as described on page 10 (Fig. 2).

1. Remove the corresponding connector cover (Fig. 1).

Squeeze tabs on the clasp to remove. Squeeze, insert and release the tabs on clasp to replace.

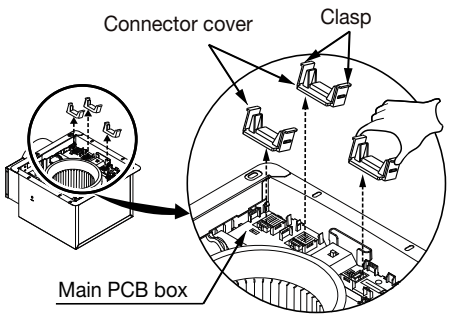

(Fig. 1)

2. Plug in corresponding module to main PCB box and fix to the slot. Make sure the connector connects well (it will click when installed in place) (Fig. 2).

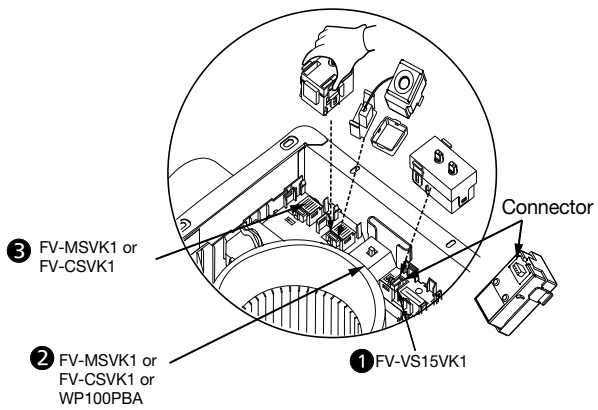

(Fig. 2)

INSTALLATION (CEILING MOUNTING)

⚠ WARNING

1. Disconnect power supply before installing the unit.
2. Please wear gloves to protect hands during the installation.

ATTENTION
Remove the tape and accessory from the adapter, before installation.

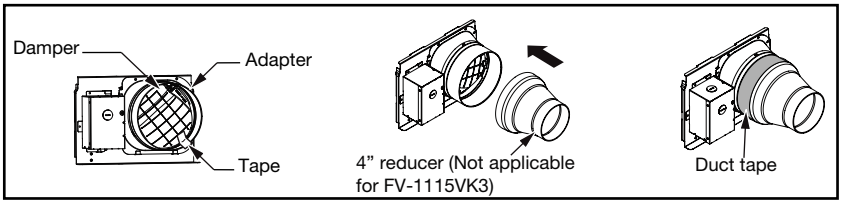

1 Remove adapter plate

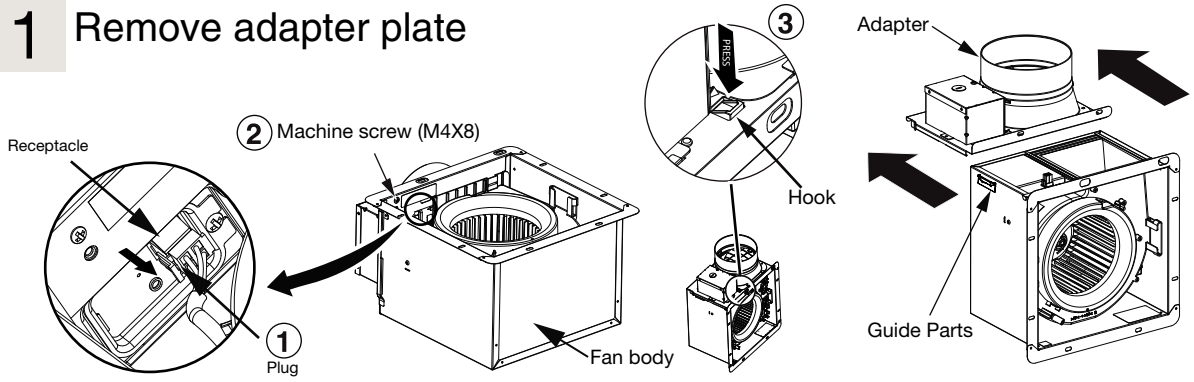

1. Disconnect the plug from the receptacle.
2. Remove the M4X8 machine screw.
3. Press the hook and slide the adapter out of the fan body.

2 Install Flex-Z Fast® bracket

The Flex-Z Fast® bracket position can be adjusted from 16" to 24" between joists.

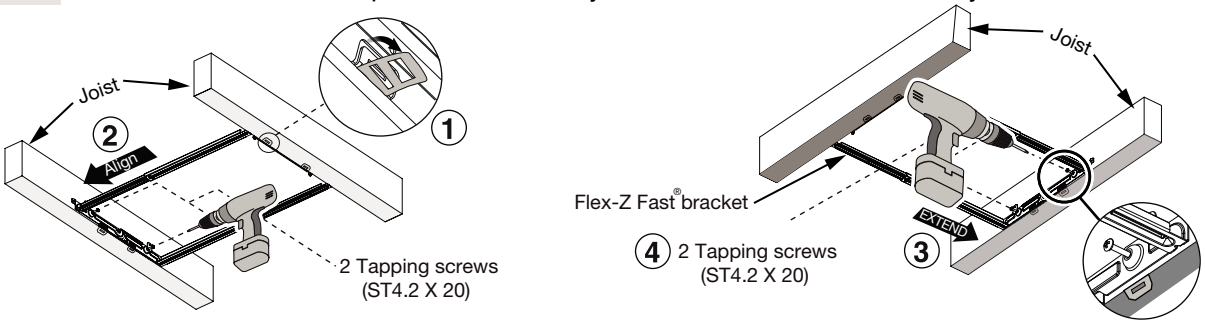

1. Bend down 4 tabs and align bracket to the joist.
2. Align and install bracket to joist by using the 2 pre-installed tapping screws.
3. Extend bracket to the other joist.
4. Install bracket to joist by using 2 pre-installed tapping screws.

3 Install circular exhaust duct

1. Remove junction box cover and secure conduit or stress relief to junction box knock-out hole.
2. Install the circular exhaust duct and secure it with clamps or ties and seal it with mastic or approved foil tape. A 4 or 6 inch circular duct is needed to connect to the relevant part of the adapter.
3. Install the adapter to Flex-Z Fast® bracket by using 2 self-drilling screws.

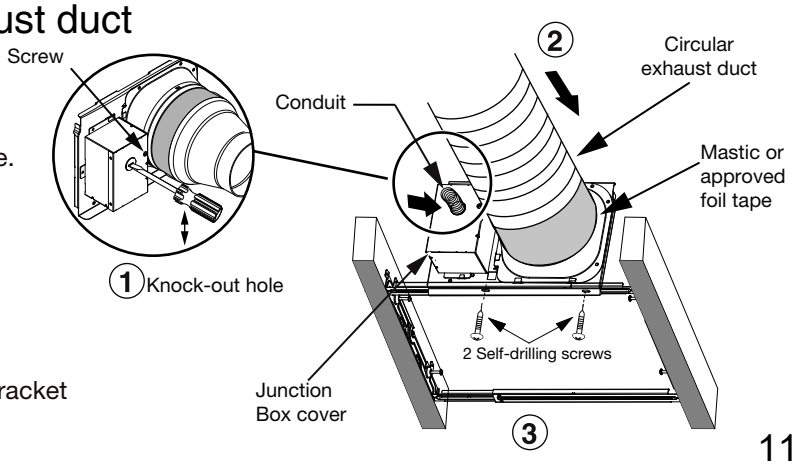

4 Wiring diagram

⚠ CAUTION

1. Mount junction box cover carefully so that lead wire are not pinched.

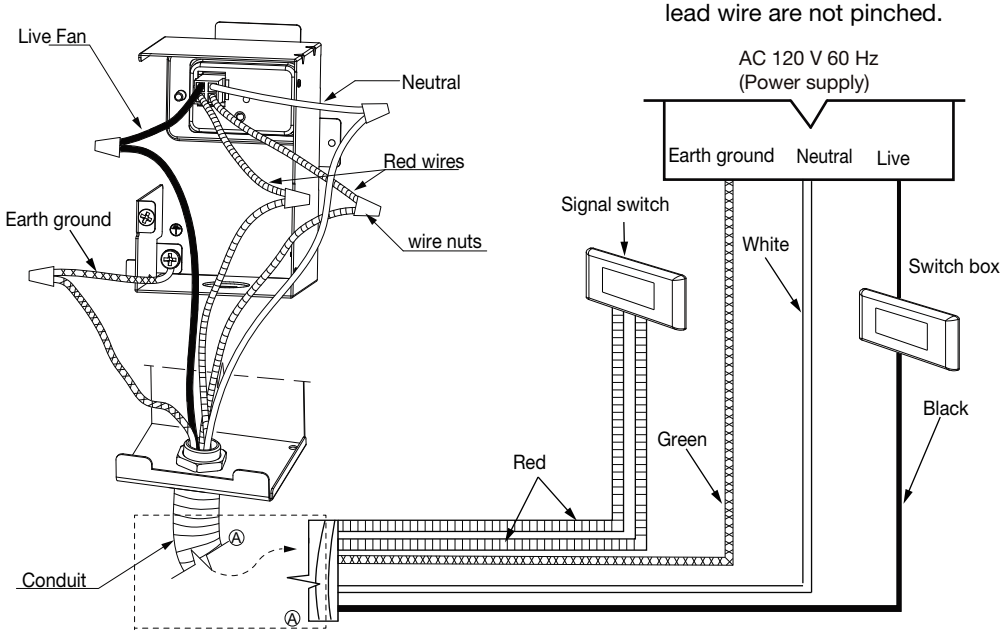

Refer to WIRING DIAGRAM (Page 7). Follow all the local electrical safety codes as well as the National Electrical Code (NEC), using UL approved wire connectors to connect fan wires.

5 Insert fan body

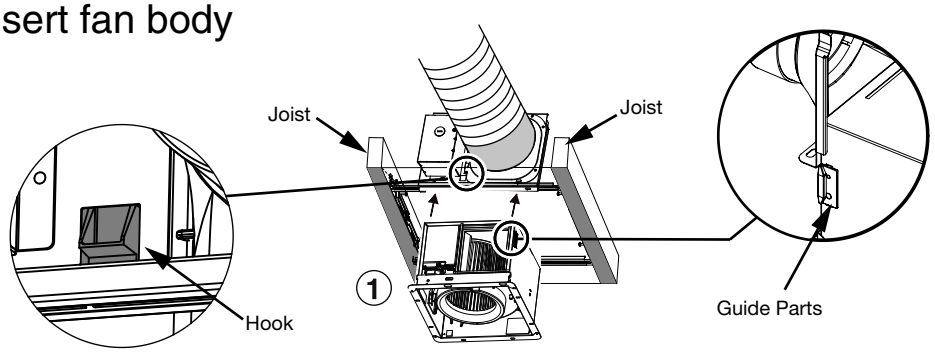

① Insert body and slide it into the adapter assembly until you hear a click from the hook.

6 Secure fan body

⚠ CAUTION

1. Secure machine screw (M4X8) to the suitable hole and not touch the Flex-Z Fast® bracket. Please fix the screw carefully to avoid damaging the screw thread.

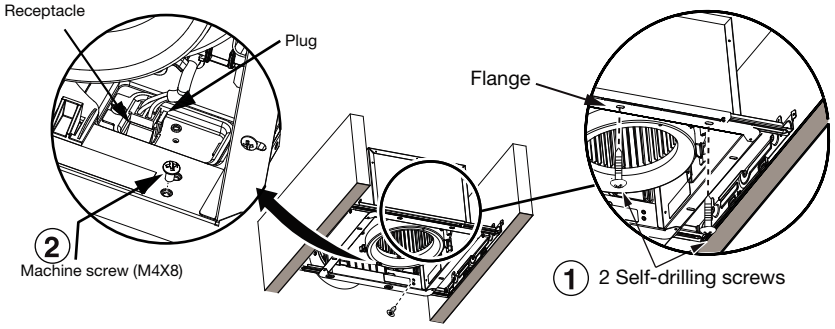

① When the flange overlaps the Flex-Z Fast® bracket, secure fan body using two self-drilling screws.

② Plug connector into receptacle and secure fan body to adapter by using machine screw (M4X8).

7 Sealing

Finish ceiling work. Ceiling hole should be aligned with the inside edge of flange.

Once fan body is mounted and secure, fill gap between flange and ceiling with caulk or other sealant to prevent air leakage.

Unit: inches (mm)

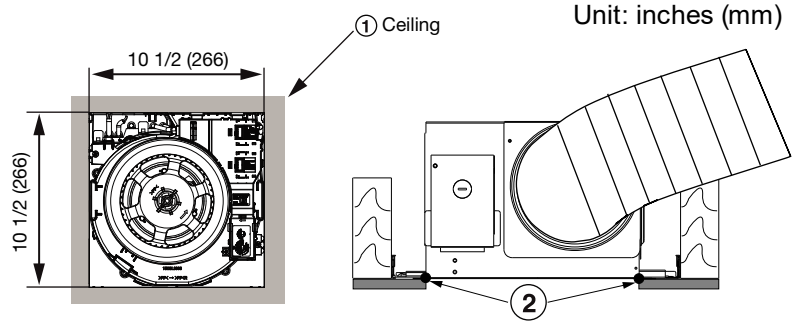

8 Install grille

A) INSTALL GRILLE FOR MODELS FV-0511VKS3, FV-0511VK3, FV-1115VK3

① Insert the mounting spring into the slot as shown to mount grille to fan body.

② Fix the motion sensor into grille.

③ Adjust Pick-A-Flow® switch and multi-speed selector (only models FV-0511VKS3S, FV-0511VKS3) as desired. Refer to indication on "FEATURES" section, page 7and 8.

④ Fix motion sensor cables in the indicated hooks.

⑤ Insert the other mounting spring into the slot as shown and mount grille to fan body.

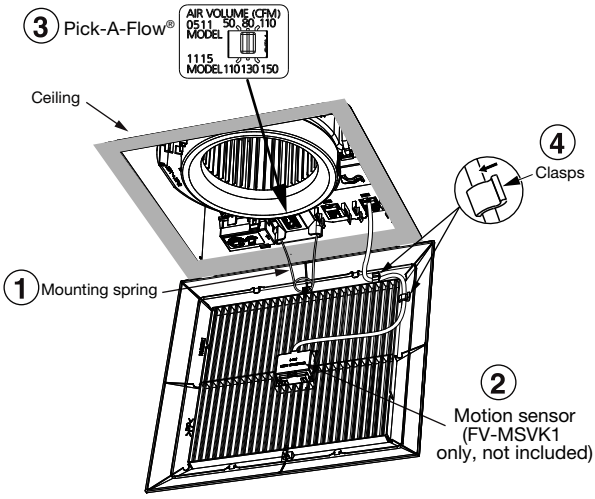

CAUTION

- The claw of connector must latch the rib completely.
- Mount grille carefully so that lead wire is not pinched.
- **ATTENTION:** When the switch is at the "ON" position, wait 8-10 seconds for the fan to start. This is a normal working condition.

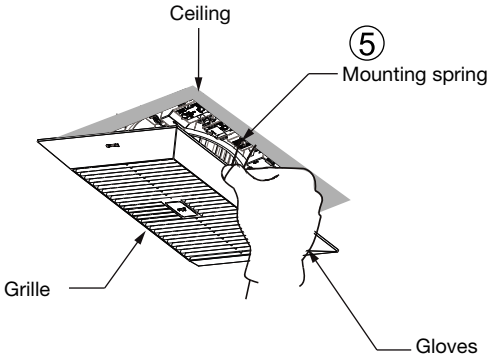

IMPORTANT:
Replace the sensor cover before the installation (only for plug-in Motion sensor module FV-MSVK1). NOT INCLUDED (Fig. 10).

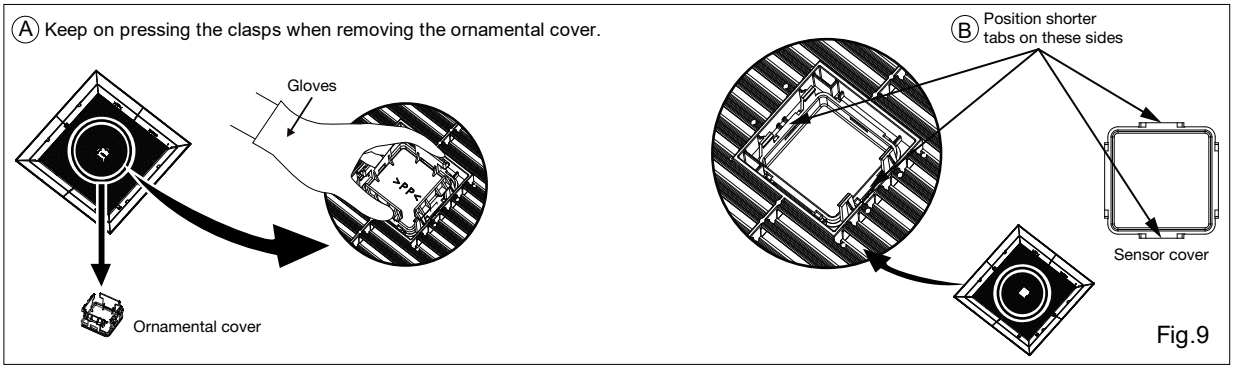

Fig.9

INSTALLATION (CEILING MOUNTING)

b) INSTALL GRILLE FOR MODEL FV-0511VKS3S

Note: Before installing the grill for model FV-0511VKS3S follow the steps 1 through 8 (P.11 to 13).

1. Insert the mounting spring into the slot as shown to mount grille to fan body.
2. Fix the motion sensor into grille.
3. Adjust Pick-A-Flow® switch and multi-speed selector (only models FV-0511VKS3S, FV-0511VKS3) as desired. Refer to indication on “FEATURES” section, page 7 and 8.
4. Fix motion sensor cables in the indicated hooks.
5. Insert the other mounting spring into the slot as shown and mount grille to fan body.

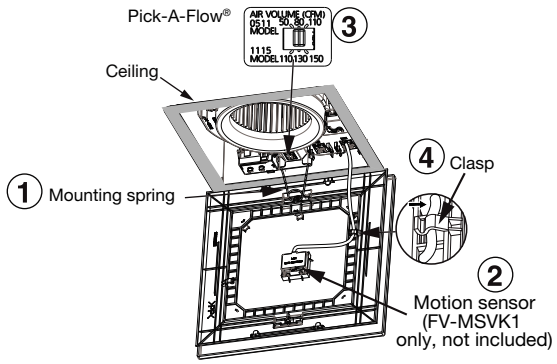

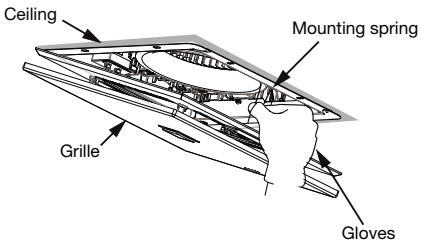

IMPORTANT:
Replace the sensor cover before the installation (only for plug-in Motion sensor module FV-MSVK1). NOT INCLUDED (Fig. 10).

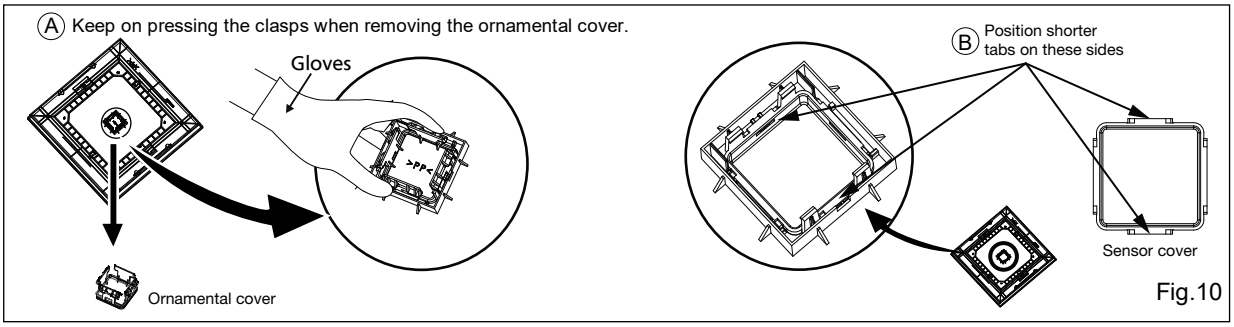

Fig.10

INSTALLATION (WALL MOUNTING)

⚠ WARNING

1. Disconnect power supply before installing the unit.
2. Please wear gloves to protect hands during the installation.

ATTENTION
Remove the tape and accessory from the adapter, before installation.

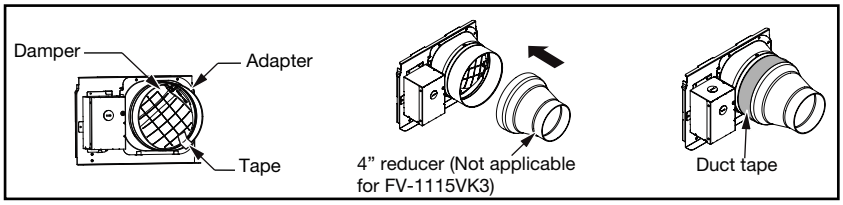

1 Remove adapter plate

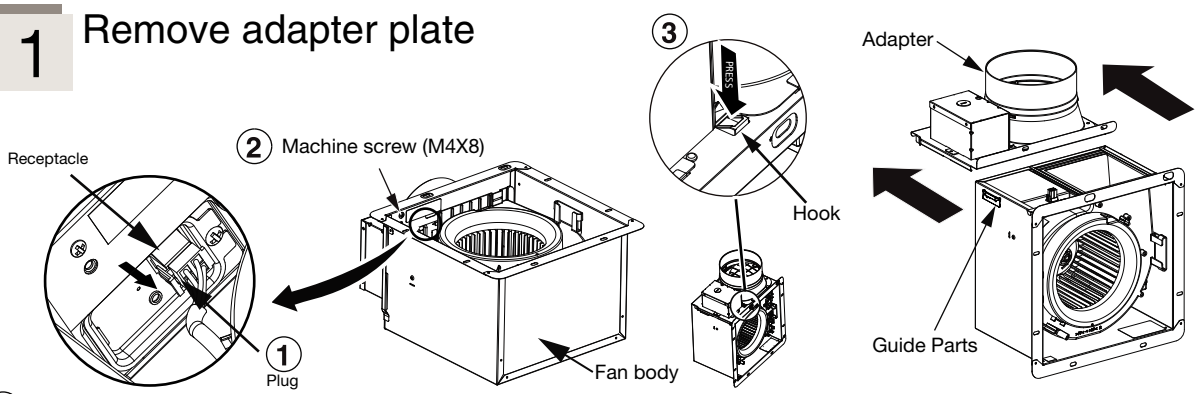

1. Disconnect the plug from the receptacle.
2. Remove the M4X8 machine screw.
3. Press the hook and slide the adapter out of the fan body.

2 Install Flex-Z Fast® bracket

The Flex-Z Fast® bracket position can be adjusted from 16" to 24" between studs.

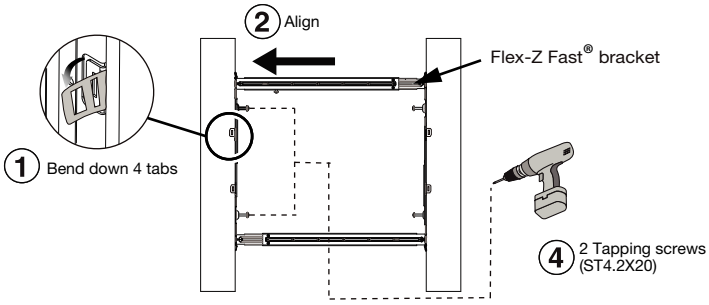

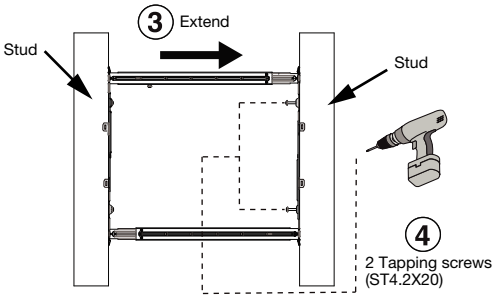

1. Bend down 4 tabs and align bracket to the stud.
2. Align and install bracket to stud by using 2-preinstalled tapping screws.
3. Extend bracket to the other stud.
4. Install bracket to stud by using 2-preinstalled tapping screws.

3 Install circular exhaust duct

1. Remove junction box cover and secure conduit or stress relief to junction box knock-out hole.
2. Install the circular exhaust duct and secure it with clamps or ties and seal it with mastic or approved foil tape. A 4 or 6 inch circular duct is needed to connect to the relevant part of the adapter.
3. Install the adapter to Flex-Z Fast® bracket by using 2 self-drilling screws.
4. Complete the wiring; please refer to step 4 on page 12.

⚠ CAUTION

1. The adapter of product must be installed upward.

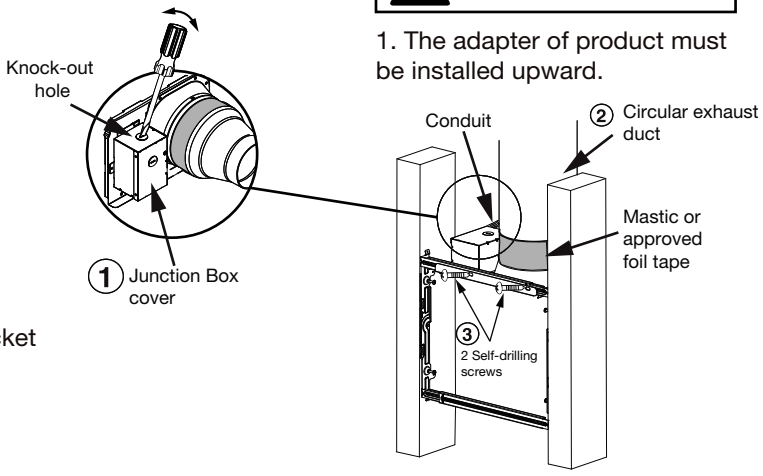

4 Insert and secure fan body

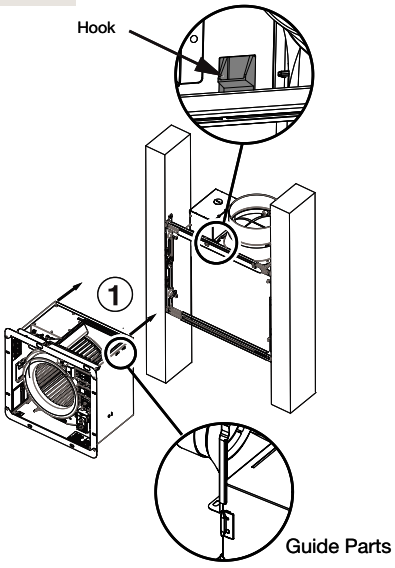

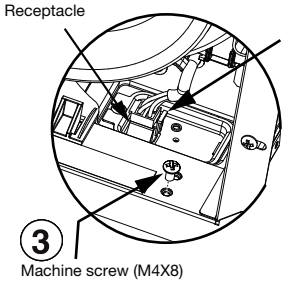

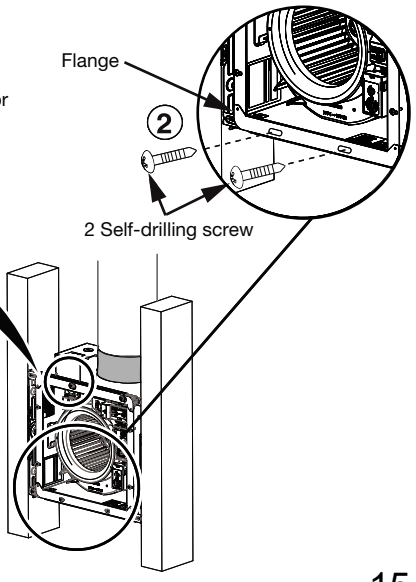

INSTALLATION (WALL MOUNTING)

① Insert the body and slide it into the adapter assembly until you hear a click from the hook.

② Secure the fan body to Flex-Z Fast® bracket by using 2 self-drilling screws.

③ Secure fan body and plug connector to adapter by using machine screw (M4X8). To finish wall work and install grille, please refer to steps 7 and 8 (p. 13).

INSTALLATION (RETROFIT)

⚠ WARNING

1. Disconnect power supply before installing the unit.
2. Please wear gloves to protect hands during the installation.

ATTENTION
Remove the tape and accessory from the adapter, before installation.

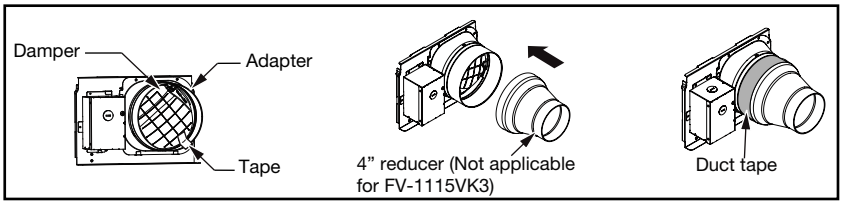

1 Remove the existing fan and cut opening

Unit: inches (mm)

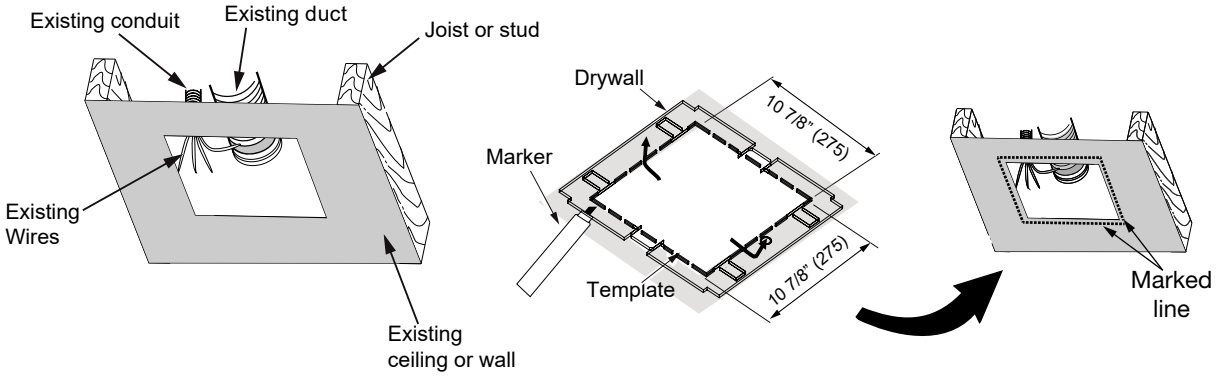

① Remove the existing fan, leaving the existing ductwork and wiring in place.

② Using housing masking template to mark the ceiling or wall opening, cut the ceiling or wall along the marked line.

2 Install Flex-Z Fast® bracket

The Flex-Z Fast® bracket position can be adjusted from 16" to 24" between joists or studs.

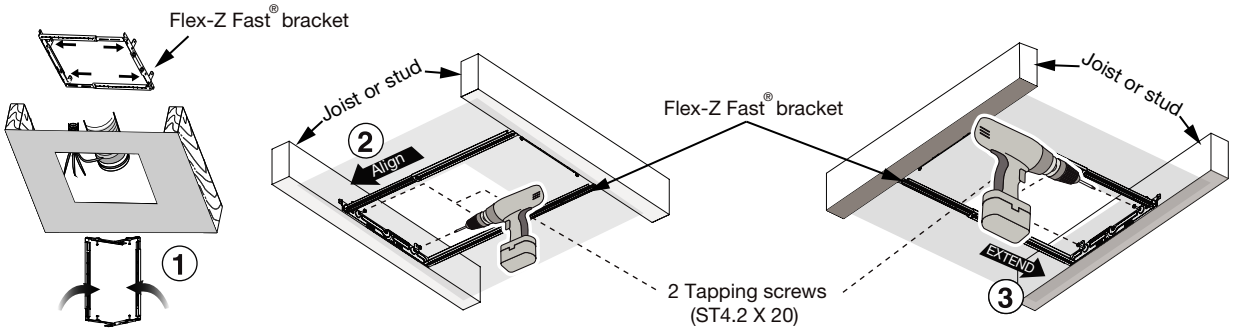

① Insert Flex-Z Fast® bracket.

② Align and install bracket to joist or stud by using the 2 pre-installed tapping screws.

③ Extend bracket to the other joist or stud.

④ Install bracket to joist or stud by using 2 pre-installed tapping screws.

3 Install circular exhaust duct and conduit

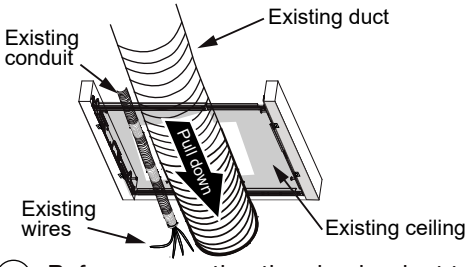

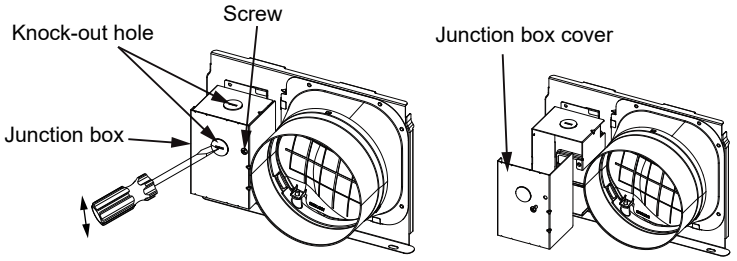

① Before connecting the circular duct to the adapter and conduit to junction box, pull down the circular duct and conduit from the ceiling or wall.

② Before removing knock-out hole and junction box cover Following step 1 “Remove adapter plate” on (P. 11)

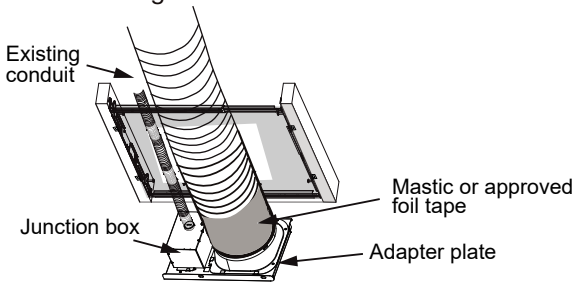

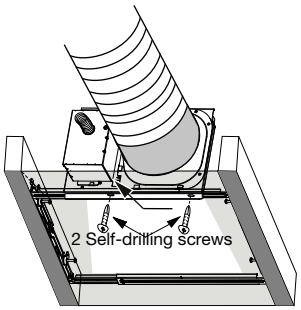

③ Install the circular exhaust duct and secure it with clamps or ties and seal it with mastic or approved foil tape. A 4 or 6 inch circular duct is needed to connect to the relevant part of the adapter.

④ Secure conduit and connect wires. Refer to wiring diagram on page 13.

⑤ Install the adapter to Flex-Z Fast® bracket by using 2 self-drilling screws.

⑥ Finish installation process following steps 5 through 8 (P. 13 to P. 14).

MAINTENANCE (CLEANING)

⚠ CAUTION

1.- Routine maintenance must be done every year. Please wear gloves during the cleaning work.

2.- Never use gasoline, benzene, thinner or any other such chemicals for cleaning the ventilating fan.

3.- Do not immerse motor in water when cleaning. Do not soak resin parts in water over 140 °F (60 °C).

4.- Do not use cleaning sprays, solvent, or water on or near the sensors.

⚠ WARNING

1.-Disconnect power supply before working on unit.

1 Remove grille

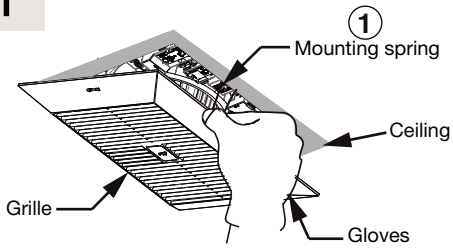

① Remove grille by pulling down one mounting spring.

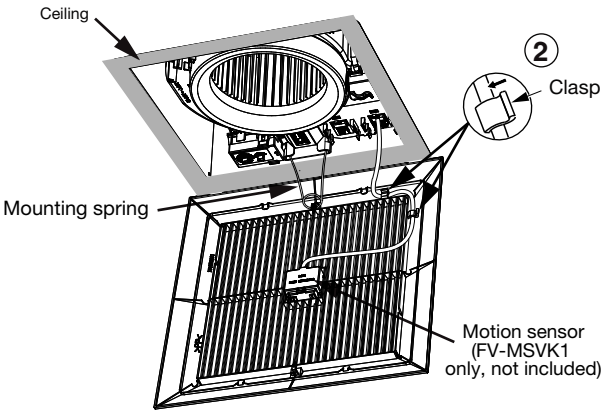

② Remove the lead wire of sensor unit from the clasp (2 point), remove the sensor unit from the grille.

MAINTENANCE (CLEANING)

2 Maintenance of unit

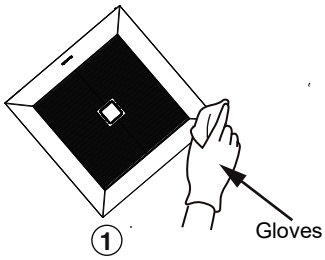

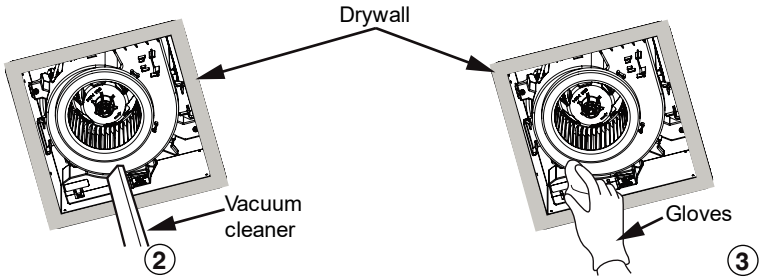

NOTE : The grille should be dry after cleaning.

(1) Clean grille. (Don't put into hot water. Use non-abrasive kitchen detergent, wipe dry with clean cloth.)

(2) Remove dust and dirt from fan body using a vacuum cleaner.

(3) Using a cloth dampened with kitchen detergent, remove any dirt from fan body. Wipe dry with a clean cloth. Reinstall grille after finishing.

PRACTICAL GUIDE TO INSTALLATION

1. The ducting has a strong effect on the air flow, noise and energy use of the fan. Use the shortest, straightest duct routing possible for best performance, and avoid installing the fan with smaller ducts than recommended. Insulation around the ducts can reduce energy loss and inhibit mold growth. Fans installed with existing ducts may not achieve their rated airflow.

2. A circular 6-inch duct is recommended for best performance and proper fan installation.

3. Ensure duct joints and exterior penetrations are sealed with caulk or other similar material to create an airtight path and to minimize building heat loss and gain and reduce the potential for condensation.

4. Place / wrap insulation around duct and / or fan in order to minimize possible condensation buildup within the duct, as well as minimize building heat loss and gain.

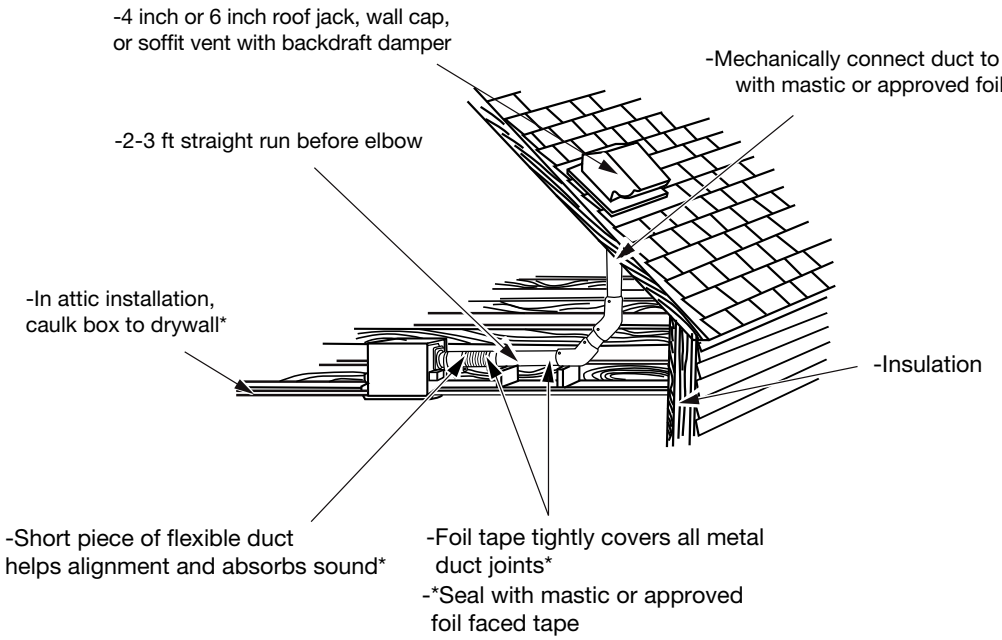

SPECIFICATIONS

■ Specifications for base model fans

Model No.	Air direction	Voltage (V)	Frequency (Hz)	Duct diameter (inches)	Air volume at 0.1" WG (CFM)	Noise (sones)	Speed (rpm)	Power (W) Fan	Weight lb.(kg)
FV-0511VK3 FV-0511VKS3	Exhaust	120	60	4	110	<0.3	782	9.7	9.7 (4.4)
					80	<0.3	684	5.6	
					50	<0.3	630	3.8	
FV-0511VKS3S	Exhaust	120	60		110	<0.3	829	10.7	9.9 (4.5)
					80	<0.3	726	6.2	
					50	<0.3	645	4.0	

Model No.	Air direction	Voltage (V)	Frequency (Hz)	Duct diameter (inches)	Air volume at 0.1" WG (CFM)	Noise (sones)	Speed (rpm)	Power (W) Fan	Weight lb.(kg)
FV-0511VK3 FV-0511VKS3	Exhaust	120	60	6	110	<0.3	595	6.7	9.7 (4.4)
					80	<0.3	569	4.4	
					50	<0.3	575	3.4	
FV-0511VKS3S	Exhaust	120	60		110	<0.3	641	7.4	9.9 (4.5)
					80	<0.3	601	4.7	
					50	<0.3	577	3.4	
FV-1115VK3	Exhaust	120	60		150	<0.3	680	11.6	9.5 (4.3)
					130	<0.3	638	8.8	
					110	<0.3	595	6.7	

Performance based on HVI procedures 915, 916 and 920

■ Specifications for Multi-Speed fans

Model No.	Air direction	Voltage (V)	Frequency (Hz)	Duct diameter (inches)	Air volume at 0.1" WG (CFM)	Noise (sones)	Speed (rpm)	Power (W) Fan	Weight lb.(kg)
FV-0511VK3 FV-0511VKS3	Exhaust	120	60	4	100	<0.3	747	7.8	9.7 (4.4)
					90	<0.3	714	6.6	
					80	<0.3	684	5.6	
					70	<0.3	672	5.1	
					60	<0.3	654	4.4	
					50	<0.3	630	3.8	
					40	<0.3	619	3.4	
					30	<0.3	606	2.9	
					0	--	--	1.0 (*)	
FV-0511VKS3S	Exhaust	120	60	4	100	<0.3	783	8.3	9.9 (4.5)
					90	<0.3	751	7.1	
					80	<0.3	726	6.2	
					70	<0.3	708	5.4	
					60	<0.3	677	4.7	
					50	<0.3	645	4.0	
					40	<0.3	617	3.3	
					30	<0.3	612	3.0	
					0	--	--	1.0 (*)	

SPECIFICATIONS

Model No.	Air direction	Voltage (V)	Frequency (Hz)	Duct diameter (inches)	Air volume at 0.1" WG (CFM)	Noise (sones)	Speed (rpm)	Power (W) Fan	Weight lb. (kg)
FV-0511VK3 FV-0511VKS3	Exhaust	120	60	6	100	<0.3	580	5.5	9.7 (4.4)
					90	<0.3	572	4.9	
					80	<0.3	569	4.4	
					70	<0.3	565	4.0	
					60	<0.3	570	3.6	
					50	<0.3	575	3.4	
					40	<0.3	563	3.0	
					30	<0.3	587	2.8	
					0	--	--	1.0 (*)	
FV-0511VKS3S	Exhaust	120	60		100	<0.3	629	6.2	9.9 (4.5)
					90	<0.3	620	5.4	
					80	<0.3	601	4.7	
					70	<0.3	592	4.3	
					60	<0.3	590	3.9	
					50	<0.3	577	3.4	
					40	<0.3	577	3.1	
					30	<0.3	585	2.9	
					0	--	--	1.0 (*)	
FV-1115VK3	Exhaust	120	60		120	<0.3	626	7.5	9.5 (4.3)
					110	<0.3	595	6.7	
					100	<0.3	580	5.5	
					90	<0.3	572	4.9	
					80	<0.3	569	4.4	
					70	<0.3	565	4.0	
					60	<0.3	570	3.6	
					50	<0.3	575	3.4	
					0	--	--	1.0 (*)	

Reference performance based on HVI procedures 915, 916 and 920. [(*) Stand by wattage)

PRODUCT SERVICE

Warning Concerning Removal of Covers. The unit should be serviced by qualified technicians only.
Your product is designed and manufactured to ensure a minimum of maintenance. Should your unit require service or parts, call Panasonic Call Center at 1-866-292-7299 (USA) or 1-800-669-5165 (Canada).

Panasonic Corporation of North America
Two Riverfront Plaza, Newark, NJ 07102
www.panasonic.com

Panasonic Canada Inc.
5770 Ambler Drive, Mississauga, Ontario L4W 2T3
www.panasonic.ca

© Panasonic Corporation 2024