breez Slim

MODEL SLM50-110-C

(50/80/110 CFM)

Full Speed:

50 CFM/<0.3 Sones @ 0.1" SP, 6.0 Watts
50 CFM/0.8 Sones @ 0.25" SP, 9.5 Watts
80 CFM/0.4 Sones @ 0.1" SP, 8.5 Watts
80 CFM/1.0 Sone @ 0.25" SP, 14.5 Watts
110 CFM/1.2 Sones @ 0.1" SP, 16.5 Watts
110 CFM/1.5 Sones @ 0.25" SP, 24.0 Watts

Description

Low noise ceiling/wall mount ventilating fan rated for continuous running. Fan is ENERGY STAR qualified, HVI, UL, and cUL certified, and can be used to comply with ASHRAE 62.2 (local and whole building continuous and intermittent operation) and CA Title 24 requirements.

DC Motor/Blower

- Power Rating of 120 volts/60Hz
- Motor equipped with thermal cutoff fuse
- Removable with permanently lubricated plug-in motor
- Full speed adjustable, 50, 80 or 110 CFM
- Built-in soft start function to increase bearings' life
- Automatically powers OFF when impeller is locked abnormally

Housing

- Galvanized steel body
- Detachable 4" oval metal duct adapter
- Built-in backdraft damper
- Hanger bar included
- Easy installation with mounting flange

Grille

- Attractive design using ABS material
- Attaches directly to housing with torsion springs

LED Indicator

- Turn the power switch on/off to operate on/off, LED indicator will be green when power is on

Warranty

- 3-Year limited warranty

TYPICAL SPECIFICATION

Ventilation fan shall be Delta Breez model SLM50-110-C; ENERGY STAR qualified with Brushless DC Motor engineered to run continuously for a minimum 70,000 hours; airflow rating of 110 CFM and loudness rating of 1.2 Sones at 0.1 static pressure as certified by the Home Ventilating Institute (HVI); power consumption of 16.5 Watts with efficiency rating of 6.6 CFM/Watt at 0.1" static pressure; fan will feature motor lock protection and self-compensating motor speed for intended airflow when static pressure is encountered. UL and cUL listed for tub/shower enclosure when used with GFCI-protected branch circuit wiring.

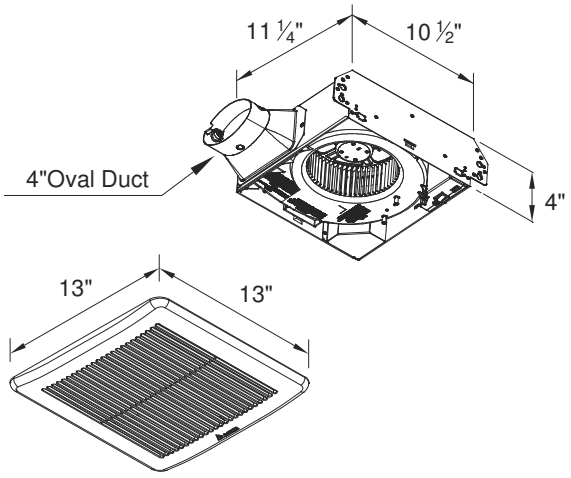

BreezSlim SLM50-110-C						
Fan Speed	Full speed					
Static Pressure (inches w.g.)	0.1	0.25	0.1	0.25	0.1	0.25
Air Flow (CFM)	50	50	80	80	110	110
Sones	<0.3	0.8	0.4	1.0	1.2	1.5
Power (W)	6	9.5	8.5	14.5	16.5	24
Efficiency (CFM/Watts)	8.3	5.2	9.4	5.5	6.6	4.5
Current (Amps)	0.6 Max.					
Power Rating (V/Hz)	120 / 60					

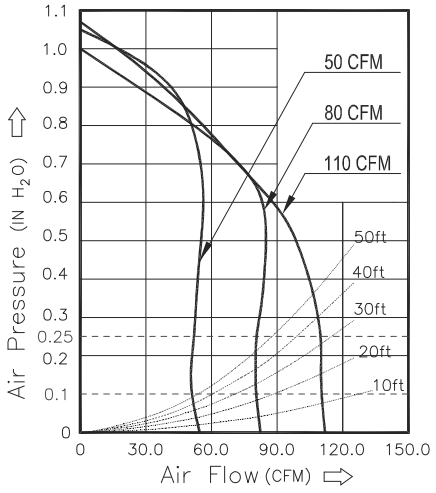

Model	Quantity	Comments	Project:
			Location:
			Architect:
			Engineer:
			Contractor:
			Submitted by:
			Date: