MicroMetl

Since 1965

Economizer
Install Guide
ECH-SRTCB-D2

MicroMetl

Since 1965

Table of Contents

Topic	Page Number
General Install Instructions	1
Honeywell Wiring Diagram	11
Honeywell Manual	13

MicroMetl

Since 1965

Updated in May 2022 with revised harness that plugs into Vane Axial Fan Unit Control Board - without jumpers

3 to 6 Ton
ULL Horizontal
Economizer
Accessory

Installation Instructions

Part No: ECH-SRT12CB-D2*H

IMPORTANT: Read these instructions completely before attempting to install accessory economizer.

CONTENTS

Safety Consideration. 1
General Descriptions. 1
Usage Chart, Package Contents, Sensors 2
Accessories and Compliance. 2-3
Installation. 3-10
Economizer Wiring Diagram 11-12
Enthalpy Accessory. 13
Differential Return Sensor Accessory. 14
Title 24 High Temp Limit, Demand Control Ventilation. 14
Remote Fault Detection & Diagnostics. 15
Economizer Jade Controller. 16
Programming Jade W7220 Controller. 17
Controller Menu Structure. 18-21
Checkout Tests & Controller Terminals. 21-22
Start-Up and Operation. 23
Troubleshooting. 24

SAFETY CONSIDERATIONS

Installation of this accessory can be hazardous due to system pressures, electrical components and equipment, and equipment locations (such as a roof or elevated surface). Only trained qualified installers and service technicians should install, start-up, and service this equipment.

When installing this accessory, observe precautions in the literature and on any labels attached to the equipment and all other safety precautions may apply.

- Follow all safety codes.
- Wear safety glasses and work gloves.
- Use care in handling and installing the accessory.

It is important to recognize safety information. This is the safety-alert symbol ⚠. When you see this symbol on the unit and in instructions or manuals, be alert to the potential for personal injury.

Understand the signal words DANGER, WARNING, CAUTION, and NOTE. These words are used with the safety-alert symbol. DANGER identifies the most serious hazards which **will** result in severe personal injury or death. WARNING signifies hazards which **could** result in personal injury or death. CAUTION is used to identify unsafe practices, which **may** result in minor personal injury or product and property damage.

NOTE is used to highlight suggestions which **will** result in enhanced installation, reliability, or operation.

⚠ WARNING

ELECTRICAL SHOCK HAZARD

Failure to follow this warning could cause personal injury or death. Before performing service or maintenance operations on the unit, always turn off main power switch to unit and install lock(s) and lockout tag(s). Unit may have more than one power switch. Ensure electrical service to rooftop unit agrees with voltage and amperage listed on the unit rating plate.

⚠ CAUTION

CUT HAZARD

Failure to follow this caution may result in personal injury.

Sheet metal parts may have sharp edges or burrs. Use care and wear appropriate protective clothing, safety glasses and gloves when handling parts and servicing roof top units.

⚠ CAUTION

Failure to follow this caution may result in personal injury and damage to the unit. Cover the duct opening as a precaution so objects cannot fall into the return duct opening. Be sure to remove the cover when installation is complete.

GENERAL

The Economizer system utilizes the latest technology available for integrating the use of free cooling with mechanical cooling for packaged rooftop units. The code compliant Jade W7220 control system optimizes energy consumption, zone comfort, and equipment cycling by operating the compressors when the outdoor-air is too humid or warm, integrating the compressor with outdoor air when free cooling is available, and locking out the compressor when outdoor-air temperature is too cold. Demand control ventilation is supported.

This Economizer can be used with 1 or 2 speed indoor fan motor units.

The Economizer system utilizes gear-drive technology with a direct-mount spring return actuator that will close upon loss of power. The Economizer system comes standard with fault detection and diagnostics (FDD), an outdoor air sensor, and mixed air temperature sensor (also called supply air temperature sensor). Outdoor enthalpy, indoor (return) dry bulb or enthalpy, and CO2 sensors are available for field installation. See Table 5 for sensor usage.

Economizer includes outside air damper/hood assembly with communicating actuator. Return damper assembly with non-communicating actuator, and barometric relief damper/hood assembly. Standard integrated barometric relief dampers provide natural building pressurization control. An optional power exhaust system is available for applications requiring even greater exhaust capabilities. The power exhaust set point is adjustable at the Economizer controller.

See Table 1-3 for package usage. See Table 4 for package contents.

See Table 5 for sensor usage.

IMPORTANT: These economizers meet all economizer damper requirements as specified in ASHRAE 90.1, IECC and California's Title 24. Economizer must be installed square to avoid damper leakage or damper binding. Squareness tolerance is ± 1/32 inch.

Manufacturer reserves the right to discontinue, or change at any time, specifications, design and prices without notice and without incurring obligations.
Copyright MicroMetl Corporation 2019. All rights reserved.

MicroMetl

Since 1965

Table 1 - Carrier Usage Chart

CARRIER MODEL NUMBER	ECONOMIZER PART NUMBER
Small Cabinet EcoBlue units with Unit Control Board (UCB) & Vane Axial Fan	
48/50GC 04-06 50GCQ 04-06 48/50FC 04-07 50FCQ 04-07	Dry Bulb OA Sensor = ECH-SRT12CB-D2DH
	Enthalpy OA Sensor = ECH-SRT12CB-D2EH
Small Cabinet Legacy units with Central Terminal Board (CTB)	
48/50HC, LC, 04-06 48/50TC 04-07 50TCQ 04-07 50HCQ 04-06 50KCQ04-06 48/50KC 04-06	Dry Bulb OA Sensor = ECH-SRT12CB-D2DH
	Enthalpy OA Sensor = ECH-SRT12CB-D2EH

Table 2 - Bryant Usage Chart

BRYANT MODEL NUMBER	ECONOMIZER PART NUMBER
Small Cabinet Axiom-Fan units with Unit Control Board (UCB) & Vane Axial Fan	
581K/551K 04-06 559K/582K 04-07	Dry Bulb OA Sensor = ECH-SRT12CB-D2DH
	Enthalpy OA Sensor = ECH-SRT12CB-D2EH
Small Cabinet Legacy units with Central Terminal Board (CTB)	
581J/551J 04-06 549J/547J/559J/582J 04-06 548J/580J/558J 04-07	Dry Bulb OA Sensor = ECH-SRT12CB-D2DH
	Enthalpy OA Sensor = ECH-SRT12CB-D2EH

Table 3 - ICP Usage Chart

ICP MODEL NUMBER	ECONOMIZER PART NUMBER
Small Cabinet X-Vane units with Unit Control Board (UCB) & Vane Axial Fan	
RGW/RAW 036-060 RGV/RAV 036-072	Dry Bulb OA Sensor = ECH-SRT12CB-D2DH
	Enthalpy OA Sensor = ECH-SRT12CB-D2EH
Small Cabinet Legacy units with Central Terminal Board (CTB)	
RGH/RAH 036-060 RGS/RAS 036-072 RHS 036-072 RHX/RHH 036-060 RGX/RAX 036-060	Dry Bulb OA Sensor = ECH-SRT12CB-D2DH
	Enthalpy OA Sensor = ECH-SRT12CB-D2EH

Table 4 - Package Contents

ECONOMIZER PART NUMBER	QTY	CONTENTS
ECH-SRT12CB-D2*H	1	Economizer Damper Assembly with Actuator and Outside Air Sensor
	1	Jade 9901-2020 (HW: W7220) Controller with Attached Harness*
	1	9901-2021 (HW: C7250) Mixed Air Temp Sensor*
	1	9962-0570 Wire Harness*
	1	Hood Assembly with Top and 2 Sides
	1	Barometri Relief Damper/Hood
	1	Aluminum Filter
	1	Hardware Bag*

* Shipped in hardware kit for field installation
HW = Honeywell

Table 5 - Economizer Sensor Usage

APPLICATION	ECONOMIZER WITH OUTDOOR AIR SENSOR
	Accessories Required
Outdoor Air Dry Bulb	The 9901-2021 (C7250) outdoor air dry bulb sensor is factory installed on "D2DH" economizer.
Single Enthalpy	The 9901-2022 (C7400S) outdoor air enthalpy sensor is factory installed on "D2EH" economizers
Mixed Air Sensor	9901-2021 (C7250) provided with economizer and field installed in blower compartment.
Differential Dry Bulb or Enthalpy	9901-2022-DIFF JC2*

* Includes 9901-2022 sensor and wiring harness.

NOTES:

1 - The controller's wiring harness is designed specifically for EcoBlue, Axiom-Fan, X- Vane units with the Unit Control Board (UCB). If your unit has the older CTB (Central Terminal Board) or Centrifugal Supply Blower then you must purchase a different harness (MicroMetl P/N 9962-0407 & 9962-0407SAOAEXT, If a NV customer then purchase P/N 1002-0407).

2 - If you have a 48/50JC 04-07 unit with System VU, these controls will not work properly. Please let your distributor know that you will need an ECH-SRT12CB-D0DH-4 economizer.

Compliance — Economizers meet California Energy Commission Title 24 prescriptive section 140.4 (damper leakage etc.), and mandatory section 120.2.i for Fault Detection and Diagnostic controls.

Economizers meet ASHRAE 90.1 damper leakage requirements and Fault Detection and Diagnostic requirements.

Economizers meet IECC damper leakage and Fault Detection and Diagnostic requirements.

NOTE: IECC requires differential return air sensor, which must be ordered separately. See Accessory 9901-2022-DIFF JC2.

Outside air, return air, and relief dampers are AMCA rated.

INSTALLATION

Step 1: Turn off power supply(s) and install lockout tag.

Step 2: Remove the existing unit filter access panel and discard. Raise the panel and swing the bottom outward. The panel is now disengaged from the track and can be removed. See Figure 1. Remove the horizontal panel on unit. See Figure 1.

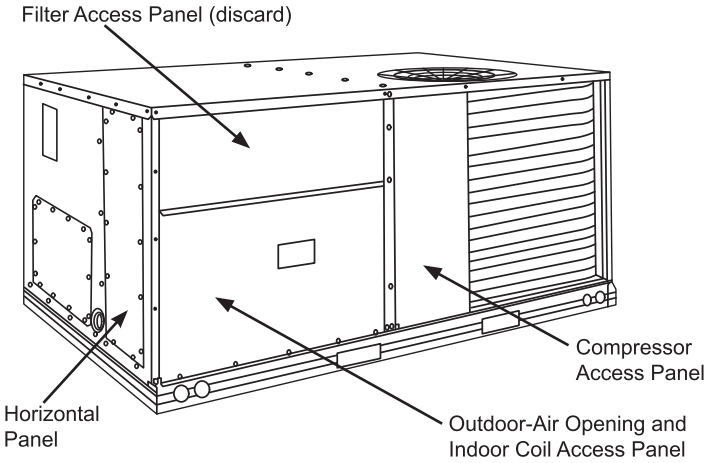

Figure 1 - Typical Access Panel Locations

Step 3: Remove the indoor coil access panel and discard. See Figure 1.

Step 4: Place the economizer into R/A section of unit. See Figure 2. No fasteners are needed, economizer is sitting on R/A cover in unit.

Step 5: Attach O/A panel as shown in Figure 3, use sheet metal screws no longer than #10-16 5/16" - 11 needed. Economizer is still sitting on R/A cover in unit, no fasteners needed.

Step 6: Lift economizer so I.D. of economizer matches I.D. of economizer cut out in panel. See Figure 4.

Step 7: Once aligned use #10 sheet metal screws no longer then 5/16" to attach economizer to O/A panel.

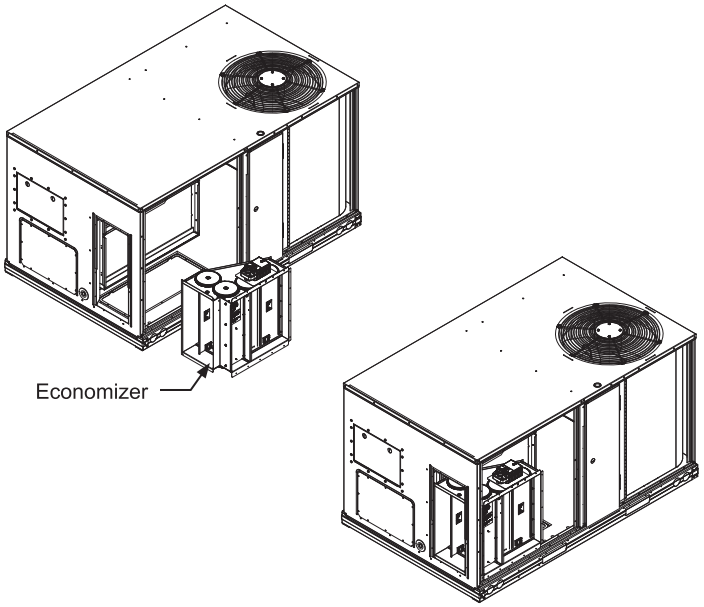

Figure 2 - Economizer Installed in R/A Section

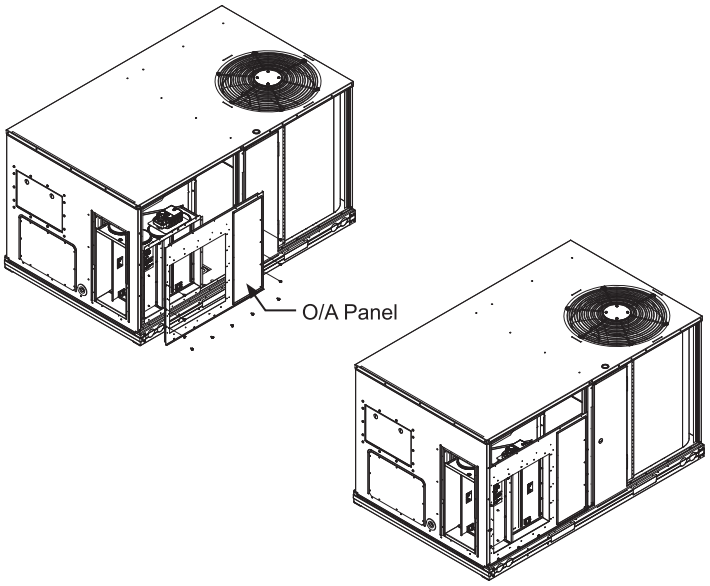

Figure 3 - Attach O/A Panel

Manufacturer reserves the right to discontinue, or change at any time, specifications, design and prices without notice and without incurring obligations.
Copyright MicroMetl Corporation 2019. All rights reserved.

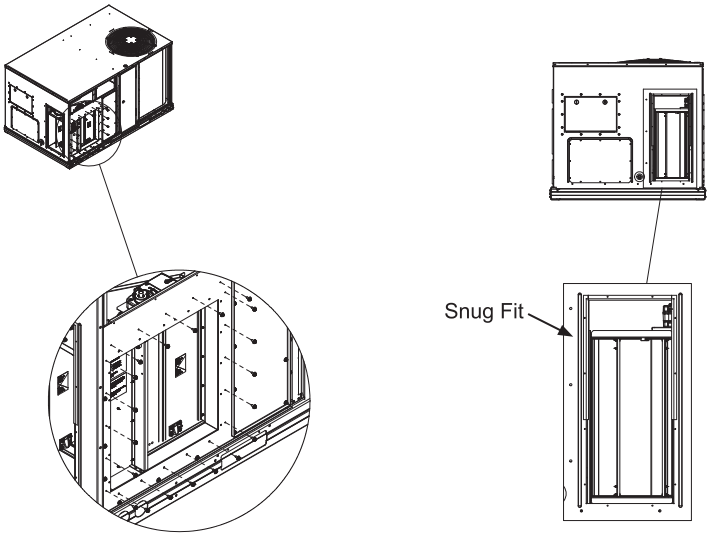

Figure 4 - Attach Economizer to O/A Panel

Step 8: After economizer is attached make sure return section of economizer fits snug and square in horizontal section of the RTU. See Figure 4. DO NOT USE SCREWS ON R/A SECTION, THIS WILL MAKE IT DIFFICULT TO REMOVE ONCE DUCT IS INSTALLED.

Step 9: If needed, attach filler panel. Slide under RTU top flange then drop down until bottom mount holes align with top holes on O/A panel. Use #10-16 5/16" sheet metal screws. See Figure 5.

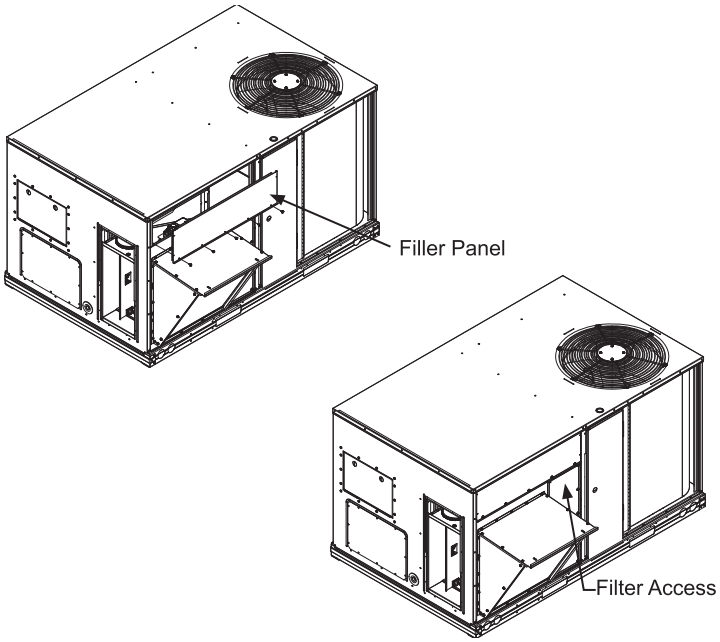

Figure 5 - Attach Filler Panel (if necessary) Chassis 2 shown

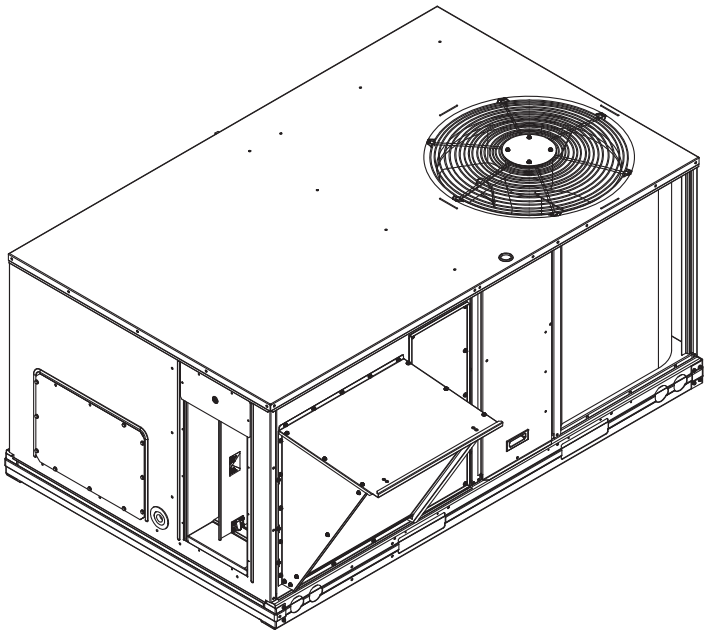

Figure 6 - Filler Panel Not Used for Chassis 1

Step 10: Attach R/A blank off panel as shown in Figure 7. Use #10-16 5/16" sheet metal screws. Grommet must be installed before duct work is installed.

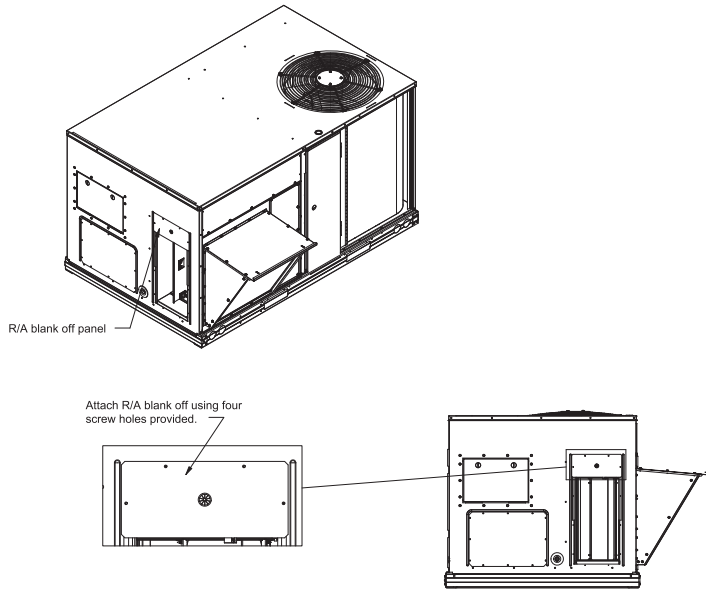

Figure 7 - Attach R/A Blank Off Panel

Manufacturer reserves the right to discontinue, or change at any time, specifications, design and prices without notice and without incurring obligations.
Copyright MicroMetl Corporation 2019. All rights reserved.

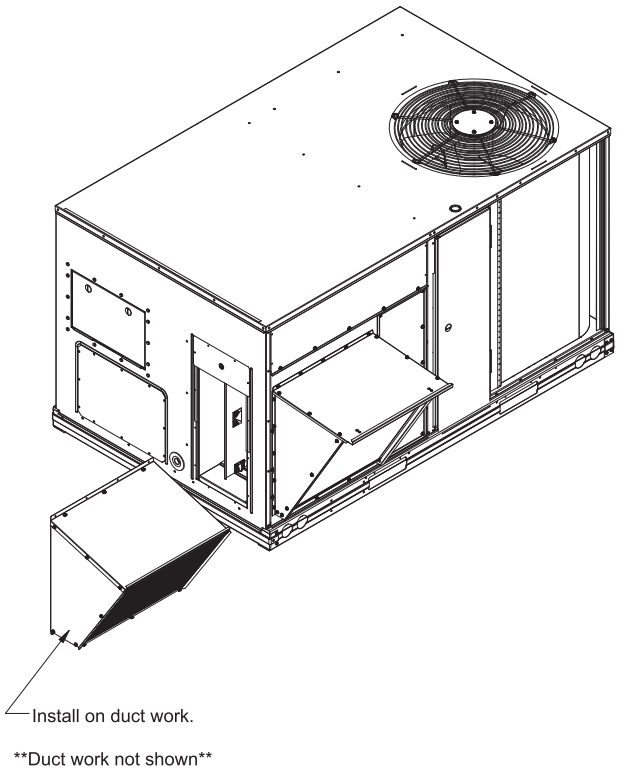

Figure 8 - Field Installed Relief Hood

Step 11: Relief is field installed on R/A duct work. Use #10-16 5/16" sheet metal screws. Make sure its water tight.

Step 12: If an economizer with a dry bulb sensor will be operating with an enthalpy outside air sensor, remove the factory installed 9901-2021 (C7250) dry bulb sensor from the outside air hood of the economizer, and install the accessory enthalpy sensor 9901-2022 (C7400) in the same location as the dry bulb sensor. Connect the (2) wire gray harness with plug from the economizer to the enthalpy sensor. See wiring diagram Figures 27 and 28. Refer to "9901-2022 Outside Air Enthalpy Sensor" section for more details on enthalpy settings.

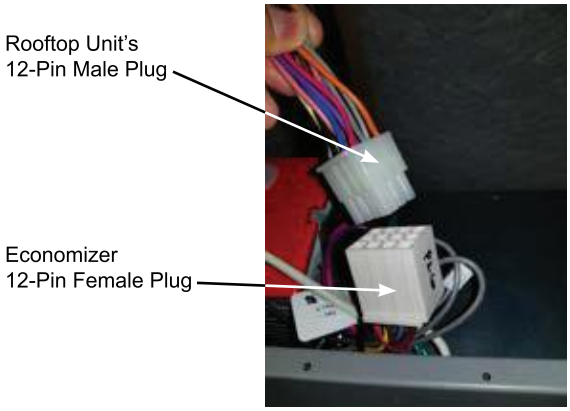

Figure 9 – Connect Economizer Harness to Unit PL6 Economizer Harness

Step 13: Remove and save the 12-pin jumper plug from the unit economizer harness – located in the upper left corner of the unit. Insert the economizer plug into the unit wiring harness. See Figure 9. *Note: the 12-pin jumper plug should be saved for future use, in the event that the economizer is ever removed. The jumper plug is not needed as long as the economizer is installed.*

Step 13A: Wire the return damper actuator per wiring diagrams in instructions. Wire harness is provided and is attached to return actuator. See Figure 27.

Step 14: Remove the indoor blower access panel and the panel(s) covering the unit control box. See Figure 10.

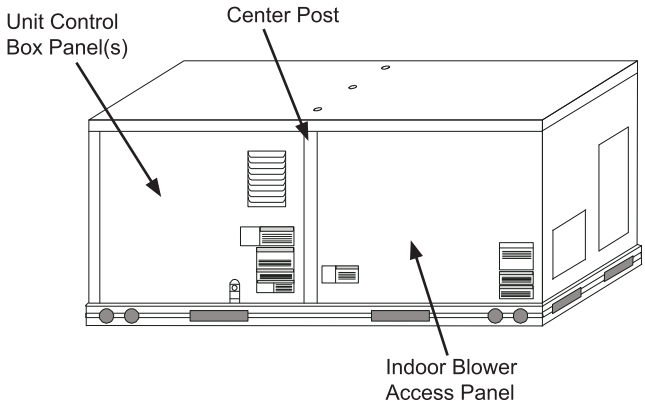

Figure 10 - Typical Indoor Fan Motor Access Panel Locations

Step 15: In the hardware kit provided with the economizer is the 9901-2020 Jade controller (Honeywell W7220). The economizer harness is attached to the controller. Mount the controller assembly on the left side of the unit control box. See Figure 11.



Figure 11 – Mount Controller Assembly in Unit Control Box
(Some control box configurations may differ)

Manufacturer reserves the right to discontinue, or change at any time, specifications, design and prices without notice and without incurring obligations.
Copyright MicroMetl Corporation 2019. All rights reserved.

ATTENTION:

1 - The controller's wiring harness is designed specifically for EcoBlue, Axiom-Fan and X-vane units with the Unit Control Board (UCB). If your unit has the older Central Terminal Board (CTB) or Centrifugal Supply Blower then you must purchase a different harness (MicroMetl P/N 9962-0407 & 9962-0407-SAOAEXT, NV Customers order P/N 1002-0407) and skip to STEP 25, Figure 18.
2 - If you have a 48/50JC 04-07 unit with System VU, these controls will not work properly. Please let your distributor know that you will need an ECH-SRT12CB-D0DH-4 economizer.

Step 16: Unplug the 12-pin female ECON plug currently connected to the Unit Control Board (UCB). See Figure 12.

Step 17: Connect the 12-pin female ECON plug removed from the UCB to the 12-pin male plug from the controller harness. See Figure 13 and 27.

Step 18: Connect the 12-pin female plug from the controller harness to ECON on the UCB. See Figure 14 and 27.

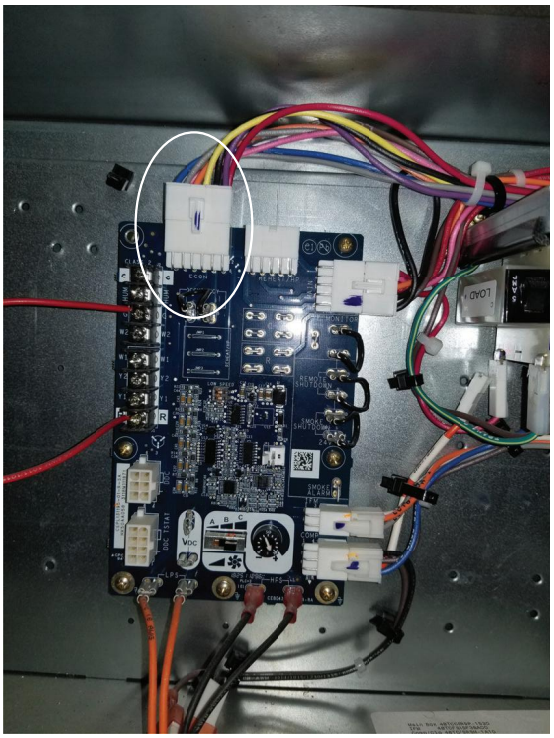

Fig. 12— Unplug ECON plug from Unit Control Board

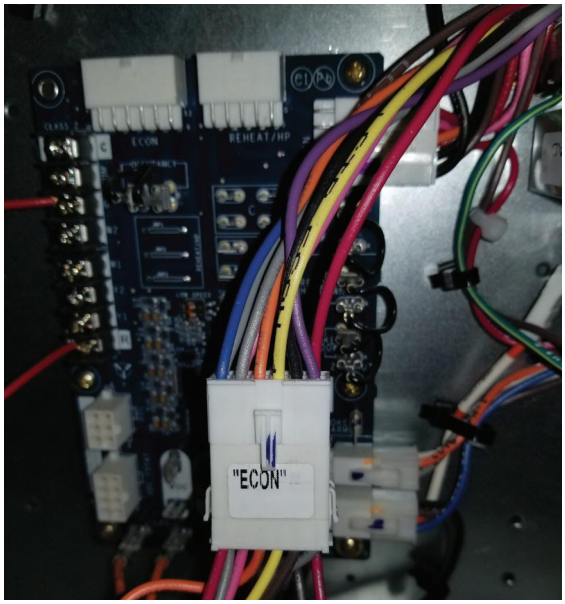

Fig. 13 — Connect 12-pin Plugs Together

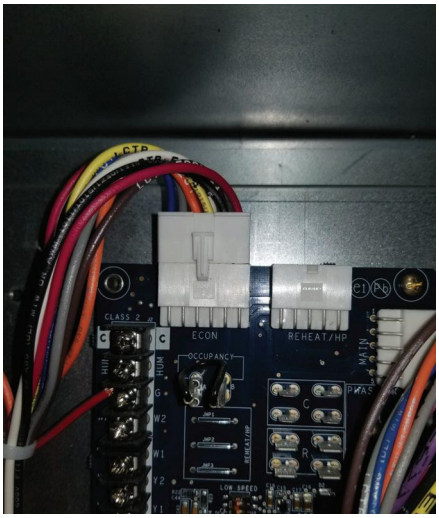

Fig. 14 — Connect 12-Pin Plug to Unit Control Board



Fig. 15 — Connect Ground Wire From Controller

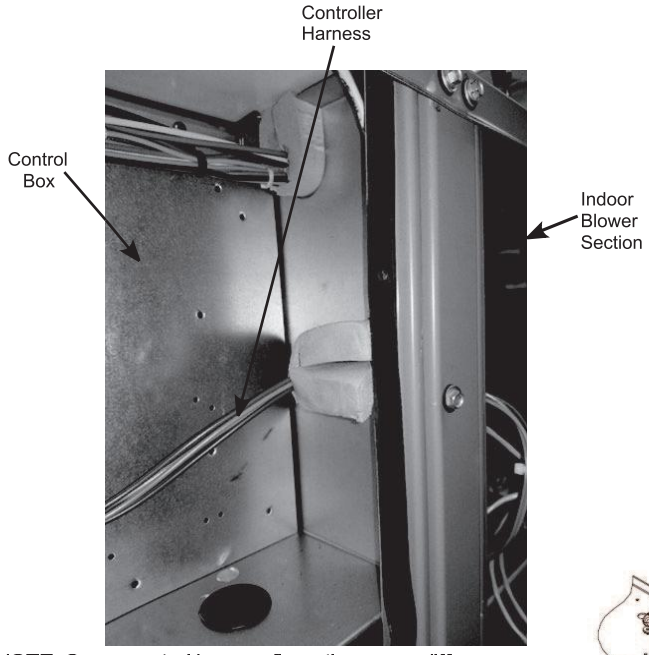

NOTE: Some control box configurations may differ.

Fig. 16 — Route MAT and OAT Wires to Indoor Blower Section

Step 19: Connect the brown wire from the controller harness to the UCB. Refer to economizer wiring diagram Figure 27. The brown wire connects to “C”, on the UCB.

Step 20: Locate the green wire with yellow stripe from the controller harness and screw it to the control box (ground). (See Figure 15.)

Step 21: Locate the 4 wires labeled (Mixed Air Thermostat) MAT and (Outdoor-air Thermostat) OAT, connected to the controller harness.

Step 22: Route the 4 wires through the divider between the control box and the indoor blower section. (See Figure 16.)

Step 23: Screw the 9901-2021 (C7250) mixed air (SAT) sensor to the left side edge of indoor blower through pre-punched holes. (See Figure 17.) Connect the orange and brown wires into the MAT sensor routed from the control. (See Figure 17.)

Step 24: Connect the pink and violet wires routed from the controller harness to the pink and violet terminals in the wire bundle in the indoor blower section. (See Figure 17.)

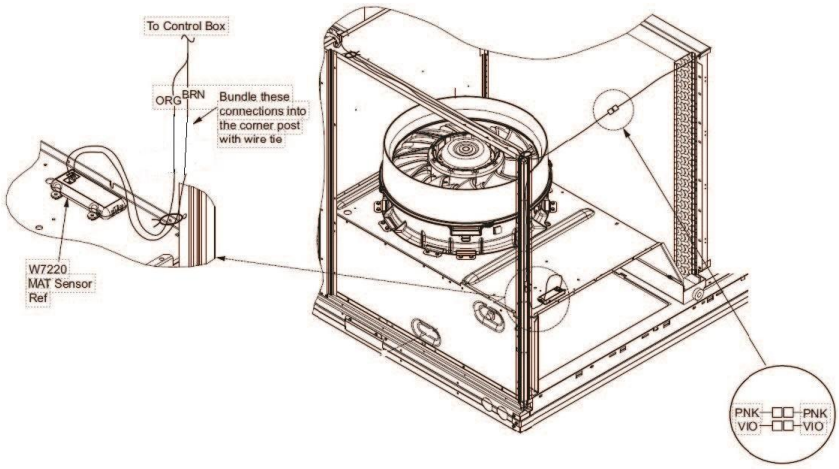

Fig. 17 - Mixed Air Sensor Installation W7220 (Vane Axial Fan System)

ATTENTION: Steps 25 through 34 are only used if the RTU has an older Central Terminal Board (CTB). In this case separately ordered 9962-0407 and 9962-0407-SAOAEXT harnesses must be ordered and installed.

Step 25: Unplug the 10-pin female ECON plug currently connected to the Central Terminal Board (CTB). See Figure 18.

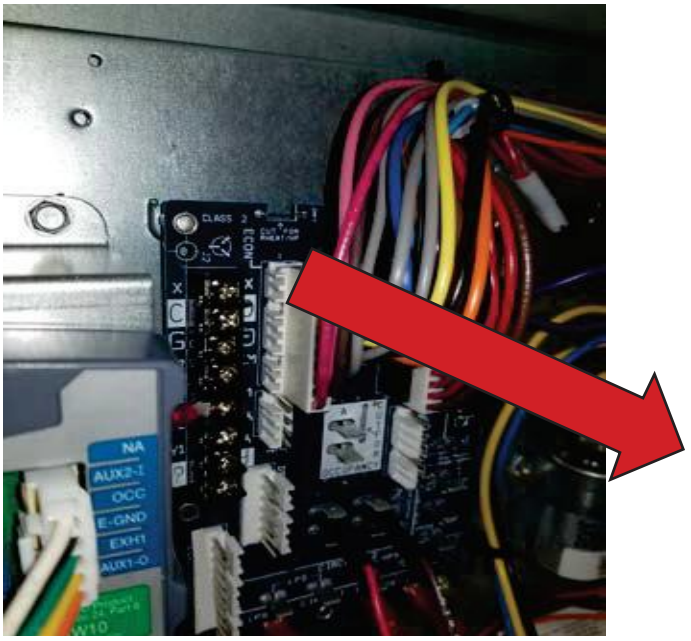

Figure 18 – Unplug ECON plug from Central Terminal Board (CTB)

Step 26: Connect the 10-pin female ECON plug removed from the CTB to the 10-pin male plug from the Jade controller harness. See Figures 19 and 28

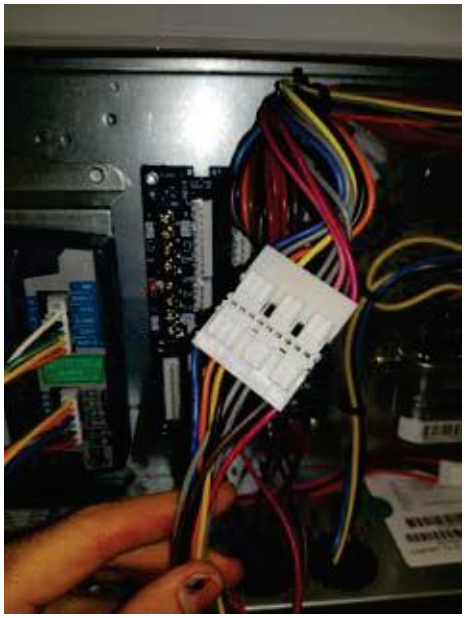

Figure 19 – Connect 10-pin Plugs Together

Step 27 Connect the 10-pin female plug from the Jade controller harness to ECON on the CTB. See Figures 20 and 28.

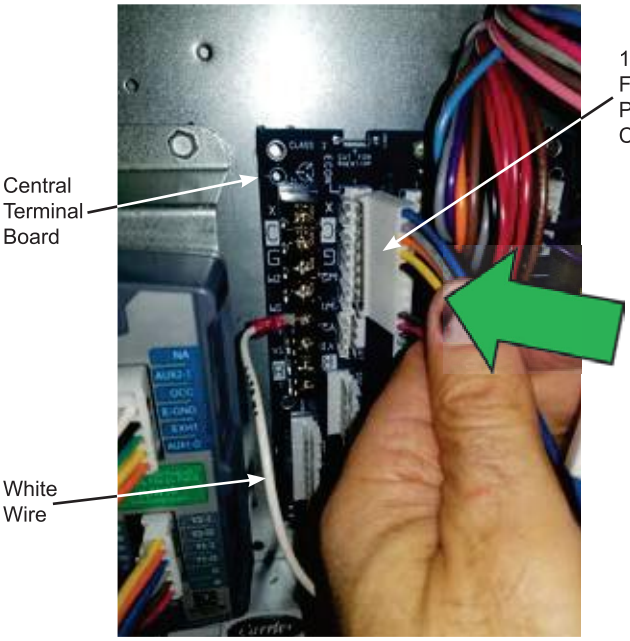

Figure 20 – Connect 10-Pin Jade Plug to Central Terminal Board

Step 28: Connect the White wire from the Jade controller harness to the W1 terminal on the CTB. See Figures 20 and 28.

Step 29: Connect the red and brown wires from the Jade controller harness to the CTB. See Figures 21 and 28. The red wire connects to “R” on the CTB, and the brown wire connects to “C”.

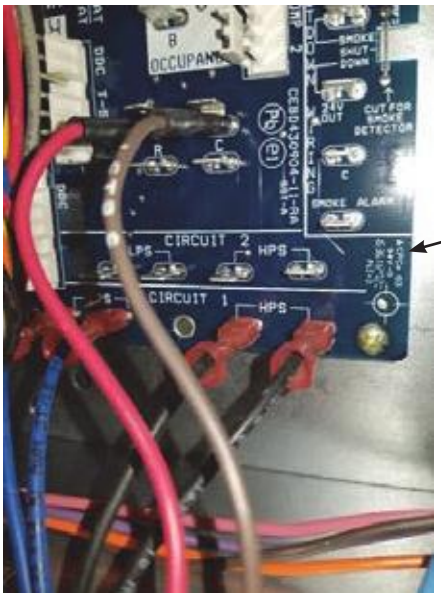

Figure 21 – Connect Red and Brown Wires to Central Terminal Board

Step 30: Locate the green wire with yellow stripe from the Jade controller harness and screw it to the control box (ground). See Figure 16.

Manufacturer reserves the right to discontinue, or change at any time, specifications, design and prices without notice and without incurring obligations.
Copyright MicroMetl Corporation 2019. All rights reserved.



Figure 22 – Connect Ground Wire From Controller

Step 31: Locate the 9962-0407-SAOAEXT harness (with 4-pin female plug) provided in the economizer hardware kit. Connect the 9962-0407-SAOAEXT harness to the 4-wire harness with a male plug from the Jade controller harness. See Figures 23 and 28. Important - See note ⚠ below.

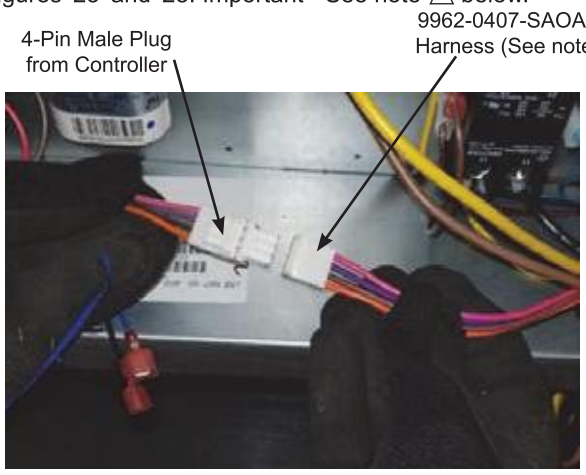

Figure 23 – Connect 9962-0407-SAOAEXT Harness to Harness from Controller (See note ⚠)

Step 32: Route the 4-wire 9962-0407-SAOAEXT harness through the divider between the control box and the indoor blower section. See Figure 24. Important - See note ⚠ below.

Note ⚠:
On some models the 9962-0407-SAOAEXT is built in to and is a part of the standard harness attached to the Jade W7220 controller terminals "MAT" and "OAT".

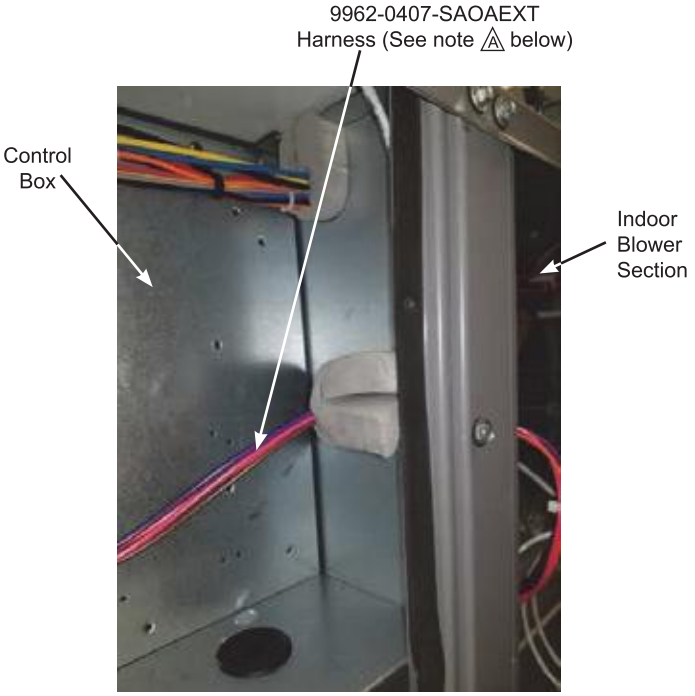

Figure 24 – Route 9962-0407-SAOAEXT Harness to Indoor Blower Section (See note ⚠ below)
(Some control box configurations may differ)

Step 33: Screw the 9901-2021 mixed air (MAT) sensor (Honeywell C7250) to the left side edge of indoor blower through pre-punched holes, see Figure 19. Confirm that the screws do not interfere with blower rotation. Connect the 2-pin plug from the 9962-0407-SAOAEXT harness to the MAT sensor. See Figures 25 and 28.



Figure 25 – Mount and connect Mixed Air Sensor

Manufacturer reserves the right to discontinue, or change at any time, specifications, design and prices without notice and without incurring obligations.
Copyright MicroMetl Corporation 2019. All rights reserved.

Step 34: Connect the pink and violet wires from the 4-wire 9962-0407-SAOAEXT harness to the pink and violet terminals in the wire bundle in the indoor blower section. See Figures 26 and 28.

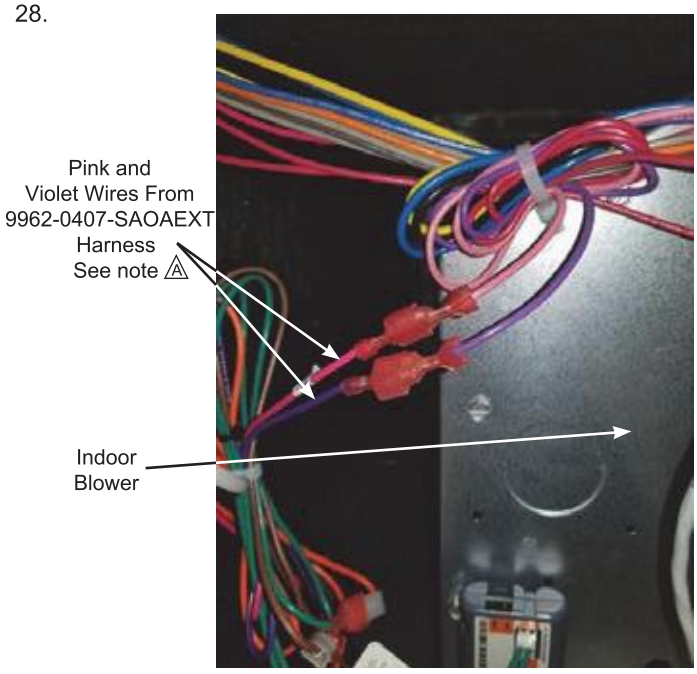

Figure 26 – Connect Pink and Violet Wires in Indoor Blower Section

Step 35: If using differential return sensor or DCV sensor install it now. See installation details later in the instructions, and the wiring diagram for further information.

Step 36: After powering controller, program the Jade W7220 controller per the instructions to follow. See Table 8 for summarized controller set up instructions. After all settings have been made, re-install the unit control box panel. See Figure 10.

Reference economizer submittal for performance chart.

Manufacturer reserves the right to discontinue, or change at any time, specifications, design and prices without notice and without incurring obligations.
Copyright MicroMetl Corporation 2019. All rights reserved.

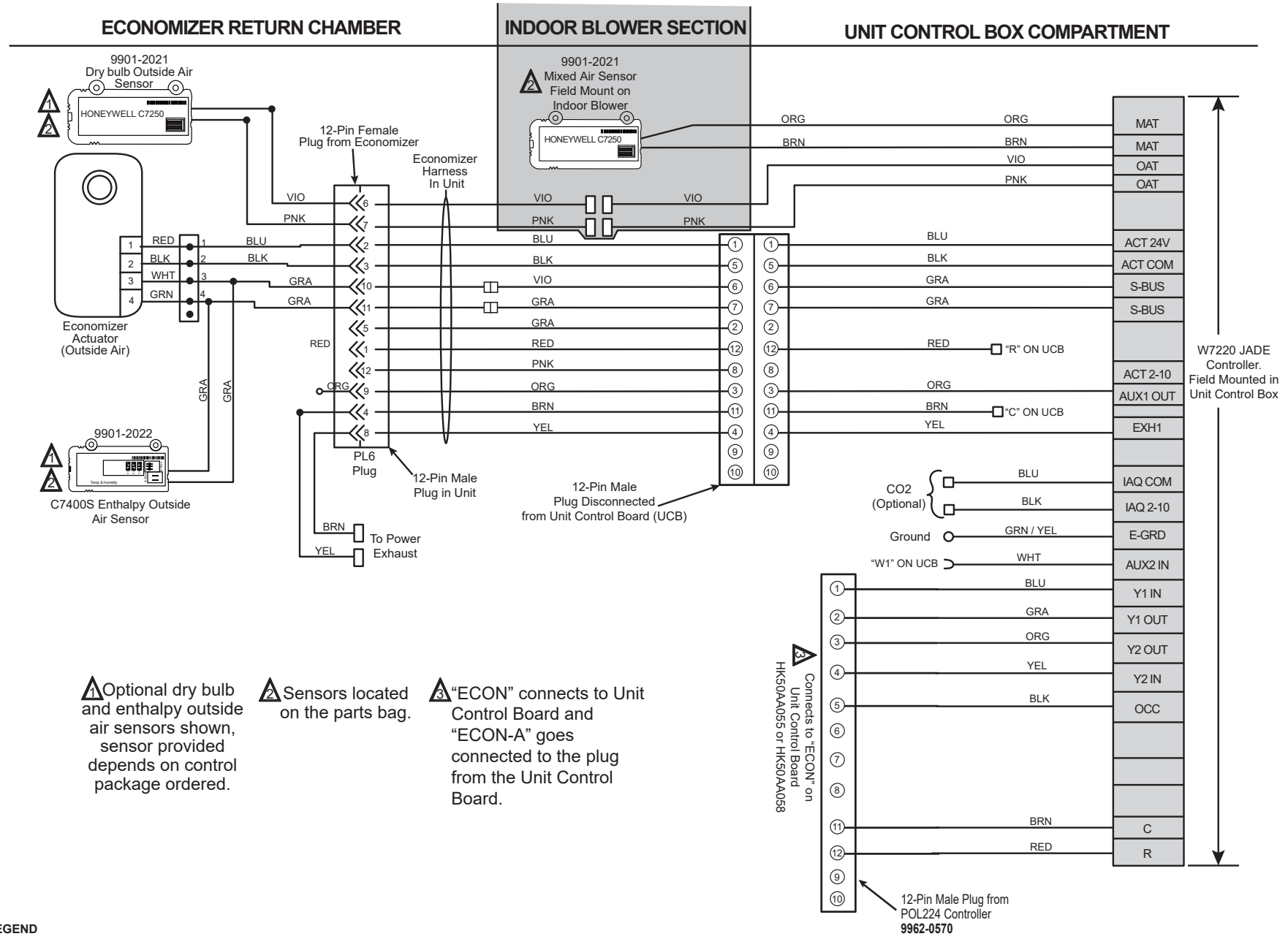

1 Optional dry bulb and enthalpy outside air sensors shown, sensor provided depends on control package ordered.

2 Sensors located on the parts bag.

3 "ECON" connects to Unit Control Board and "ECON-A" goes connected to the plug from the Unit Control Board.

LEGEND

UCB: Unit Control Board
MAT: Mixed Air Temperature Sensor
OAT: Outside Air Temperature Sensor

Figure 28 – Typical Economizer Wiring Diagram for 1 or 2 Speed Units with UCB

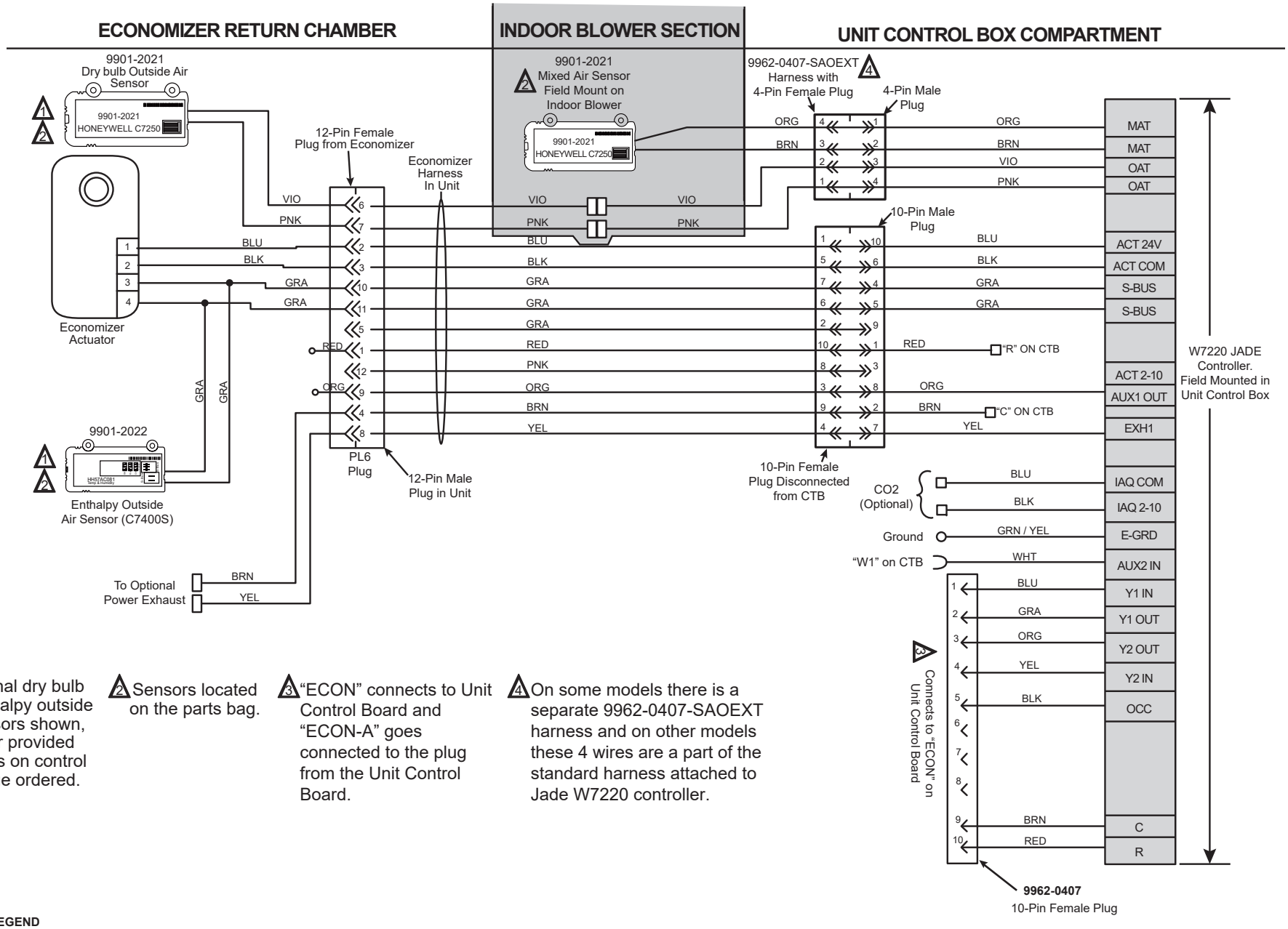

1 Optional dry bulb and enthalpy outside air sensors shown, sensor provided depends on control package ordered.

2 Sensors located on the parts bag.

3 "ECON" connects to Unit Control Board and "ECON-A" goes connected to the plug from the Unit Control Board.

4 On some models there is a separate 9962-0407-SAOEXT harness and on other models these 4 wires are a part of the standard harness attached to Jade W7220 controller.

LEGEND

CTB: Central Terminal Board
MAT: Mixed Air Temperature Sensor
OAT: Outside Air Temperature Sensor

Figure 29 – Typical Economizer Wiring Diagram for Units with CTB

W7220 ECONOMIZER

The economizer controller used on electro mechanical units is the Honeywell W7220 which is to be located in the RTU base unit's Control Box. See Fig 41 for button description of the W7220 controller. The W7220 controller provide the following:

- 2-line LCD interface screen for setup, configuration and troubleshooting.
- On-board fault detection and diagnostics
- Sensor failure loss of communications identification
- Automatic sensor detection
- Capabilities for use with multiple-speed indoor fan systems

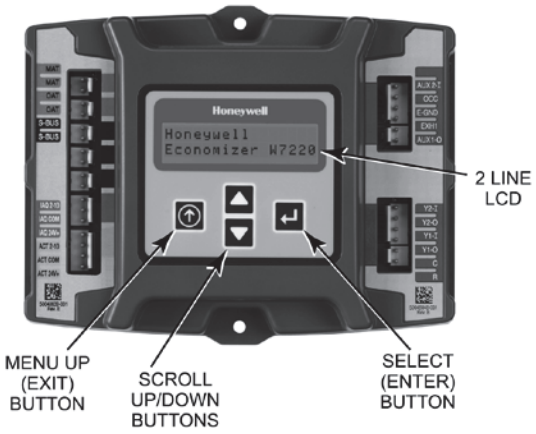

Fig. 41 - W7220 Controller

User Interface

The user interface consists of a LCD display and a 4-button keypad on the front of the economizer controller.

Keypad

The four navigation buttons (see Figure 41) are used to scroll through the menus and menu items, select menu items, and to change parameter and configuration settings.

Using the Keypad with Menus

To use the keypad when working with menus:

- Press the ▲ (Up arrow) button to move to the previous menu.
- Press the ▼ (Down arrow) button to move to the next menu.
- Press the ↵ (Enter) button to display the first item in the currently displayed menu.
- Press the ⓘ (Menu Up/Exit) button to exit a menu's item and return to the list of menus.

Using the Keypad with Settings and Parameters

To use the keypad when working with Setpoints, System Setup Advanced Settings, Checkout Tests and Alarms:

1. Navigate to the desire menu.
2. Press the ↵ (Enter) button to display the first item in the currently displayed menu.
3. Use the ▲ and ▼ buttons to scroll to the desired parameter.
4. Press the ↵(Enter) button to display the value of the currently displayed item.
5. Press the ▲ button to increase (change) the displayed parameter value.
6. Press the ▼ button to decrease (change) the displayed parameter value.

NOTE: When values are displayed, pressing and holding the ▲ or ▼ button causes the display to automatically increment.

7. Press the ↵(Enter) button to accept the displayed value and store it in nonvolatile RAM.
8. "CHANGE STORED" displays.
9. Press the ↵ (Enter) button to return to the current menu parameter.
10. Press the ⓘ (Menu Up/Exit) button to return to the previous menu.

Menu Structure

Table 11 illustrates the complete hierarchy of menus and parameters for the economizer system.

The Menus in display order are:

- STATUS
- SETPOINTS
- SYSTEM SETUP
- ADVANCED SETUP
- CHECKOUT
- ALARMS

IMPORTANT NOTE: The default setting on the W7220 controller is for a "Fan Type" with 2 speed. If your unit is 1 speed, the setting under SYSTEM SETUP > FAN TYPE must be changed to 1 speed. *NOTE: Some models' default may vary.*

PROGRAMMING THE JADE W7220 CONTROLLER

The next several pages detail the different status displays, setpoints, setup, and alarms available on the controller. This list below and Table 10 summarizes the inputs required for a standard application with a single outside air sensor.

NOTE: *instead of setting the SETPOINTS you can use the defaults already set in the Jade controller – see default settings below. See Table 10 for summarized standard settings or for more detail see Table 11 – Menu Structure.*

SYSTEM SETUP

- **INSTALL:** Allows you to set the current date. Use the keypad buttons to scroll to the correct date.
- **EQUIPMENT:** Always set to CONV even if the unit is a heat pump.
- **AUX2 IN:** Always set to W1.
- **FAN TYPE:** Set for either single or 2 speed. The default is 2 speed.
- **AUX1 OUT:** If remote Fault Detection and Diagnostic (FDD) monitoring is required select SYS. – OCC: occupancy, always set to INPUT

SETPOINTS

- **MAT SET:** this sets the mixed air temperature (MAT) setting. The controller has a default of 53 degrees, but the range is anywhere from 38 to 70 degrees F.
- **LOW T LOCK:** This setting locks out the compressor (or mechanical cooling) at a given temperature. The default is 32 degrees F, but the controller's range is from -45 to 80 degrees F.
- **DRYBULB SET:** if you have an economizer with a dry bulb outside air sensor you will see and set the DRYBULB SET. The default setting is 63 degrees F, but the controller's range is 48 to 80 degrees F.
- **ENTH CURVE:** if you have a single enthalpy outside air sensor instead of a dry bulb, you will see and set the ENTH CURVE setting. There are 5 setting options: ES1 thru ES5. Check the economizer literature for the limits for each of these settings. ES3 is the default setting.
- **MIN POS:** The minimum position allows for ventilation even when not in the free-cooling mode. If you have a single speed unit there will be only one minimum position setting. The default is 2.8 volts, but the range is 2-10Vdc.
  - **MIN POS H and MIN POS L:** If your unit is 2 speed, there will be 2 minimum position settings that show up on the menu. The first is MIN POS H (for high speed) which has a default of 2.8 volts. The second is MIN POS L (for low speed), which has a default of 3.2. Note that MIN POS H and MIN POS L are only displayed if under SYSTEM SETUP: AUX2 IN is set to "W1", and FAN TYPE is set to 2 speed.

Table 10 - Standard Jade W7220 Controller Configuration

		FOR SINGLE SPEED UNIT		FOR 2 SPEED UNITS		
	Controller Menu Item	**Default**	**Set To:**	**Default**	**Set To:**	**Note**
SETPOINTS	MAT SET	53°F	38° to 70°F	53°F	38° to 70°F	
	LOW T LOCK	32°F	-45° to 80°F	32°F	-45° to 80°F	
	DRYBLB SET	63°F	48° to 80°F	63°F	48° to 80°F	Only displayed if using single DB OA sensor
	ENTH CURVE	ES3	ES1 to ES5	ES3	ES1 to ES5	Only displayed if using a single enthalpy OA sensor
	MIN POS	2.8 Vdc	2 to 10 Vdc	NA		Only displayed if set up for single speed unit
	MIN POS H	NA	NA	2.8 Vdc	2 to 10 Vdc	Only displayed if set up for 2 speed unit
	MIN POS L	NA	NA	3.2 Vdc	2 to 10 Vdc	Only displayed if set up for 2 speed unit
SYSTEM SETUP	INSTALL	1/1/2010	Current date	1/1/2010	Current date	
	EQUIPMENT	CONV	CONV	CONV	CONV	Always set to CONV, even on HP units
	AUX2 I	W1*	W1	W1*	W1	Always set to W1
	FAN TYPE	2 speed*	1 speed	2 speed*	2 speed	Default may vary on some models
	AUX1 OUT	NONE	SYS	NONE	SYS	Set to SYS for remote FDD monitoring
	OCC	INPUT	INPUT	INPUT	INPUT	Always set to INPUT

Note 1: For 2 speed unit, under SYSTEM SETUP: EQUIPMENT= CONV, AUX2 I = W1, and FAN TYPE = 2 SPEED

Note 2: More sophisticated controller setups, including for DCV or power exhaust, are available by referring to Table 11 options

NA = Not applicable

*Available on Firmware 1.15 June 2018 and later

Table 11 — Menu Structure*

Menu	Parameter	Parameter Default Value	Parameter Range and Increment[b]	Notes
STATUS	ECON AVAIL	NO	YES/NO	ECONOMIZING AVAILABLE YES = economizing available; the system can use outside air for free cooling when required
	ECONOMIZING	NO	YES/NO	ECONOMIZING ACTIVE YES = Outside air being used for 1st stage cooling. NO = Economizing not active
	OCCUPIED	NO	YES/NO	OCCUPIED YES = OCC signal received from space thermostat or unitary controller. YES = 24 Vac on terminal OCC. NO = 0 Vac on terminal OCC
	HEAT PUMP	n/a[c]	COOL HEAT	HEAT PUMP MODE (Not available on 2–Speed configuration)
	COOL Y1—IN	OFF	ON/OFF	FIRST STAGE COOLING DEMAND (Y1---IN) Y1–I signal from space thermostat or unitary controller for Cooling Stage 1. ON = 24 Vac on terminal Y1–I OFF = 0 Vac on terminal Y1–I
	COOL Y1—OUT	OFF	ON/OFF	FIRST STAGE COOLING RELAY OUTPUT ON = 24 Vac on terminal Y1–O; Stage 1 mechanical cooling called on OFF = 0 Vac on terminal Y1–O; no mechanical cooling
	COOL Y2—IN	OFF	ON/OFF	SECOND STAGE COOLING DEMAND (Y2---IN) Y2–I signal from space thermostat or unitary controller for Cooling Stage 2. ON = 24 Vac on terminal Y2–I OFF = 0 Vac on terminal Y2–I
	COOL Y2—OUT	OFF	ON/OFF	SECOND STAGE COOLING RELAY OUTPUT ON = 24 Vac on terminal Y2–O; Stage 2 mechanical cooling called on OFF = 0 Vac on terminal Y2–O; no Stage 2 mechanical cooling
	MA TEMP	nn°F (or °C)	0 to 140°F (-18 to 60°C)	MIXED AIR TEMPERATURE, Cooling Mode Displays value of measured mixed/cooled air from MAT sensor in fan section. Displays – –.– if not connected, short or out–of–range.
	DA TEMP	nn°F (or °C)	0 to 140°F (-18 to 60°C)	DISCHARGE AIR TEMPERATURE, after Heating section (Accessory sensor required) Displays when Discharge Air sensor is connected and displays measured discharge temperature. Displays – – – – – – if sensor sends invalid value, if not connected, short or out–of–range.
	OA TEMP	nn°F (or °C)	-40 to 140°F (-40 to 60°C)	OUTSIDE AIR TEMPERATURE Displays measured value of outdoor air temperature. Displays – – – – – if sensor sends invalid value, if not connected, short or out–of–range.
	OA HUM	nn%	0 to 100%	OUTSIDE AIR RELATIVE HUMIDITY Displays measured value of outdoor humidity from accessory OA enthalpy sensor.
	RA TEMP	nn°F (or °C)	0 to 140°F (-18 to 60°C)	RETURN AIR TEMPERATURE (Accessory sensor required) Displays measured value of return air temperature from return air sensor.
	RA HUM	nn%	0 to 100%	RETURN AIR RELATIVE HUMIDITY (Accessory enthalpy sensor required) Displays measured value of return air humidity from return air sensor.
	IN CO2	___ppm	0 to 2000 ppm	SPACE/RETURN AIR CO2 (CO2 sensor required, accessory or factory option) Displays value of measured CO2 from CO2 sensor. Invalid if not connected, short or out–of–range
	DCV STATUS	n/a	ON/OFF	DEMAND CONTROL VENTILATION STATUS (CO2 sensor required, accessory or factory option) Displays ON if IN CO2 value above setpoint DCV SET and OFF if below setpoint DCV SET.
	DAMPER OUT	2.0V	2.0 to 10.0V	Displays voltage output to the damper actuator. 0% = OA Damper fully closed 100%= OA Damper full open
	ACT POS	nn%	0 to 100%	Displays actual position of outdoor air damper actuator 2.0V = OA Damper fully–closed 10.0V = OA Damper full open
	ACT COUNT	n/a	1 to 65535	Displays number of times actuator has cycled. 1 Cycle equals accrued 180° of actuator movement in any direction
	ACTUATOR	n/a	OK/Alarm (on Alarm menu)	Displays Error if voltage or torque is below actuator range
	EXH1 OUT	OFF	ON/OFF	EXHAUST STAGE 1 RELAY OUTPUT Output of EXH1 terminal: ON = relay closed OFF = relay open

** Table 11 illustrates the complete hierarchy. your menu parameters may be different depending on your configuration.*

Table 11 — Menu Structure (cont)*

Menu	Parameter	Parameter Default Value	Parameter Range and Increment[b]	Notes
STATUS (cont)	EXH2 OUT	OFF	ON/OFF	EXHAUST STAGE 2 RELAY OUTPUT Output of AUX terminal; displays only if AUX = EXH2 ON = relay closed OFF = relay open
	ERV	OFF	ON/OFF	ENERGY RECOVERY UNIT RELAY OUTPUT Output of AUX terminal; displays only if AUX = ERV ON = relay closed OFF = relay open
	MECH COOL ON	0	0, 1, or 2	Displays stage of mechanical cooling that is active.
	FAN SPEED	n/a	LOW or HIGH	SUPPLY FAN SPEED Displays speed setting of fan on a 2–speed fan unit.
	W (HEAT ON)	n/a	ON/OFF	HEAT DEMAND STATUS Displays status of heat demand on a 2–speed fan unit.
SETPOINTS	MAT SET	53°F (12°C)	38° to 70°F; (3° to 18°C) increment by 1	MIXED AIR SETPOINT Setpoint determines where the economizer will modulate the OA damper to maintain the mixed air temperature.
	LOW T LOCK	32°F (0°C)	-45° to 80°F; (-43° to 27°C) increment by 1	COMPRESSOR LOW TEMPERATURE LOCKOUT Setpoint determines outdoor temperature when the mechanical cooling cannot be turned on.
	DRYBLB SET	63°F (17°C)	48° to 80°F (9° to 27°C) increment by 1	OA DRY BULB TEMPERATURE CHANGEOVER SETPOINT Setpoint determines where the economizer will assume outdoor air temperature is good for free cooling; e.g.: at 63°F (17°C), unit will economize at 62°F (16.7°C) and below and not economize at 64°F (17.8°C) and above. There is a 2°F (1.1°C) deadband. DRYBULB SET is only displayed if the economizer has a single dry bulb sensor
	DRYBLB DIF (Available firmware 1.15, June 2018 and later)	0°F	0 to 6°F Increment by 2	Drybulb Differential will only show if using dual drybulb, i.e., when an outdoor air temperature sensor C7250 is attached to OAT terminals, and a C7400S enthalpy sensor is wired to S-Bus and configured for RAT (return air). Free cooling will be assumed whenever OA temp is at or below RAT minus this drybulb differential setting.
	ENTH CURVE	ES3	ES1, ES2, ES3, ES4, or ES5	ENTHALPY CHANGEOVER CURVE (Requires enthalpy sensor option) Enthalpy boundary “curves” for economizing using single enthalpy.
	DCV SET	1100ppm	500 to 2000 ppm; increment by 100	DEMAND CONTROL VENTILATION SETPOINT Displays only if CO2 sensor is connected. Setpoint for Demand Control Ventilation of space. Above the setpoint, the OA dampers will modulate open to bring in additional OA to maintain a space ppm level below the setpoint.
	MIN POS	2.8 V	2 to 10 Vdc	VENTILATION MINIMUM POSITION. Only displayed if controller is set for single speed unit under FAN TYPE, and if DCV is NOT used.
	MIN POS L	3.2 V	2 to 10 Vdc	VENTILATION MINIMUM POSITION AT LOW SPEED Displays ONLY if used on 2 speed units and CO2 sensor is NOT used.
	MIN POS H	2.8 V	2 to 10 Vdc	VENTILATION MINIMUM POSITION AT HIGH SPEED Displays ONLY if used on 2 speed units and CO2 sensor is NOT used.
	VENTMAX L	2.8 V	2 to 10 Vdc	DCV MAXIMUM DAMPER POSITION AT LOW SPEED (Requires CO2 sensor connected)
	VENTMAX H	4.4 V	2 to 10 Vdc	DCV MAXIMUM DAMPER POSITION AT HIGH SPEED (Requires CO2 sensor connected)
	VENTMIN L	2.25 V	2 to 10 Vdc	DCV MINIMUM DAMPER POSITION AT LOW SPEED (Requires CO2 sensor connected)
	VENTMIN H	2.8 V	2 to 10 Vdc	DCV MINIMUM DAMPER POSITION AT HIGH SPEED (Requires CO2 sensor connected)
	ERV OAT SP	32°F (0°C)	0° to 50°F; (-18° to 10°C) increment by 1	ENERGY RECOVERY VENTILATION UNIT OUTDOOR AIR TEMPERATURE SETPOINT Only displayed when AUX1 O = ERV
	EXH1 SET	50%	0 to 100%	Exhaust fan set point for single speed units. Based on OA Damper position to activate power exhaust.
	EXH1 L SET	65%	0 to 100%; Increment by 1	EXHAUST FAN SETPOINT AT LOW SPEED (on 2 speed unit) Setpoint for OA damper position when exhaust fan is powered by the economizer
	EXH1 H SET	50%	0 to 100%; Increment by 1	EXHAUST FAN SETPOINT AT HIGH SPEED (on 2 speed unit) Setpoint for OA damper position when exhaust fan is powered by the economizer
	EXH2 L SET	80%	0 to 100%; Increment by 1	EXHAUST FAN STAGE 2 SETPOINT AT LOW SPEED Setpoint for OA damper position when exhaust fan 1 is powered by the economizer. Only used when AUX1–O is set to EHX2. Note: Standard power exhaust kits have only 1 speed, therefore EXH2 is not applicable
	EXH2 H SET	75%	0 to 100%; Increment by 1	EXHAUST FAN STAGE 2 SETPOINT AT HIGH SPEED Setpoint for OA damper position when exhaust fan 1 is powered by the economizer. Only used when AUX1–O is set to EHX2. Note: Standard power exhaust kits have only 1 speed, therefore EXH2 is not applicable

Note: *MIN POS defaults may vary on some models.*

** Table 11 illustrates the complete hierarchy. your menu parameters may be different depending on your configuration.*

Table 11 — Menu Structure (cont)*

Menu	Parameter	Parameter Default Value	Parameter Range and Increment[b]	Notes
SYSTEM SETUP	INSTALL	01/01/10		Display order = MM/DD/YY Setting order = DD, MM, then YY.
	UNITS DEG	°F	°F or °C	Sets economizer controller in degrees Fahrenheit or Celsius.
	EQUIPMENT	CONV	Conventional or HP	Always set to CONV even for heat pump
	AUX2 I	W1	Always set to W1	Always set to W1
	FAN TYPE	2 speed	1 speed / 2 speed	Sets the economizer controller for operation of 1 speed or 2 speed indoor fan system. Note: Default settings may vary.
	FAN CFM	5000cfm	100 to 15000 cfm; increment by 100	UNIT DESIGN AIRFLOW (CFM) Enter ONLY if using DCVCAL ENA = AUTO
	AUX1 OUT	NONE	NONE ERV EXH2 SYS	Select OUTPUT for AUX1 O relay NONE = not configured (output is not used) ERV = Energy Recovery Ventilator[d] EXH2 = second damper position relay closure for second exhaust fan SYS = use output as an FDD remote alarm signal
	OCC	INPUT	INPUT or ALWAYS	Always set to INPUT
	FACTORY DEFAULT	NO	NO or YES	Resets all set points to factory defaults when set to YES. LCD will briefly flash YES and change to NO but all parameters will change to factory default values.
ADVANCED SETUP	MA LO SET	45°F (7°C)	35° to 55°F; (2° to 12°C) Incremented by 1°	MIXED AIR TEMPERATURE LOW LIMIT Temperature to achieve Freeze Protection (close damper and alarm if temperature falls below setup value)
	FREEZE POS	CLO	CLO or MIN	FREEZE PROTECTION DAMPER POSITION Damper position when freeze protection is active CLO = closed MIN = MIN POS or VENTMIN
	CO2 ZERO	0ppm	0 to 500 ppm: Increment by 10	CO2 ppm level to match CO2 sensor start level.
	CO2 SPAN	2000ppm	1000 to 3000 ppm; Increment by 50	CO2 ppm span to match CO2 sensor.
	STG3 DLY	2.0h	0 min, 5 min, 15 min, then 15 min intervals. Up to 4 h or OFF	COOLING STAGE 3 DELAY Delay after stage 2 for cool has been active. Turns on 2nd stage of cooling when economizer is 1st stage and mechanical cooling is 2nd
	SD DMPR POS	CLO	CLO or OPEN	Function NOT AVAILABLE with 2–speed mode
	DCVCAL ENA	MAN	manual or auto	Turns on the DCV automatic control of the dampers. Resets ventilation. For single speed units only.
	MATTCAL	0.0°F (or C)	+/ ---2.5°F (+/ ---1.4°C)	MIXED AIR TEMPERATURE CALIBRATION Allows for the operator to adjust for an out of calibration mixed air temperature (MAT) sensor
	OA T CAL	0.0°F (or C)	+/ ---2.5°F (+/ ---1.4°C)	OUTSIDE AIR TEMPERATURE CALIBRATION Allows for the operator to adjust for an out of calibration outside air temperature (OAT) sensor
	OA H CAL	0% RH	+/ ---10% RH	OUTSIDE AIR HUMIDITY CALIBRATION Allows for the operator to adjust for an out of calibration outside air enthalpy sensor
	RA T CAL	0.0°F (or C)	+/ ---2.5°F (+/ ---1.4°C)	RETURN AIR TEMPERATURE CALIBRATION Allows for the operator to adjust for an out of calibration return air temperature (RA) sensor
	RA H CAL	0% RH	+/ ---10% RH	RETURN AIR HUMIDITY CALIBRATION Allows for the operator to adjust for an out of calibration return air enthalpy sensor
	DA T CAL	0.0°F (or C)	+/ ---2.5°F (+/ ---1.4°C)	DISCHARGE AIR TEMPERATURE CALIBRATION Allows for the operator to adjust for an out of calibration discharge air temperature (DAT) sensor
	2SP FAN DELAY	5 Minutes	0 to 20 minutes in 1 minute increments	TIME DELAY ON 2nd STAGE ECONOMIZING While in the Economizing mode, this is the delay between thermostat Y2 call and Y1---O output to mechanical cooling stage, to allow high speed fan operation to attempt to cool space first.

** Table 11 illustrates the complete hierarchy. your menu parameters may be different depending on your configuration.*

Table 11 — Menu Structure (cont)*

Menu	Parameter	Parameter Default Value	Parameter Range and Increment	Notes
CHECKOUT	DAMPER VMIN .HS	n/a	n/a	Positions OA damper to VMIN High Speed position
	DAMPER VMAX .HS	n/a	n/a	Positions OA damper to VMAX High Speed position
	DAMPER OPEN	n/a	n/a	Positions OA damper to the full open position.
	DAMPER CLOSE	n/a	n/a	Positions damper to the fully closed position
	CONNECT Y1---O	n/a	n/a	Closes the Y1---O relay (Y1---O)
	CONNECT Y2---O	n/a	n/a	Closes the Y2---O relay (Y2---O)
	CONNECT AUX1O	n/a	n/a	Energizes the AUX1O output. If Aux setting is: • NONE --- not action taken • ERV --- 24 Vac out. Turns on or signals an ERV that the conditions are not good for economizing but are good for ERV operation.[d] • SYS – 24 Vac out. Issues a system alarm
ALARMS(_)				Alarms display only when they are active. The menu title “ALARMS(_)” includes the number of active alarms in parenthesis ( ).
	MA T SENS ERR	n/a	n/a	MIXED AIR TEMPERATURE SENSOR ERROR
	CO2 SENS ERR	n/a	n/a	CO2 SENSOR ERROR
	OA T SENS ERR	n/a	n/a	OUTSIDE AIR TEMPERATURE SENSOR ERROR OAT sensor connected at input terminals OAT
	OA SYLK SENS ERR	n/a	n/a	OUTSIDE AIR ENTHALPY SENSOR ERROR OAT sensor connected on S– bus
	DA T SENS ERR	n/a	n/a	DISCHARGE AIR TEMPERATURE SENSOR ERROR
	SYS ALARM	n/a	n/a	When AUX1-0 is set to SYS and there is any alarm (e.g., failed sensors, etc.), the AUX1-0 terminal provides 24 Vac out.
	ACT UNDER V	n/a	n/a	ACTUATOR VOLTAGE LOW Voltage received at actuator is below expected range
	ACT OVER V	n/a	n/a	ACTUATOR VOLTAGE HIGH Voltage received at actuator is above expected range
	ACT STALLED	n/a	n/a	ACTUATOR STALLED Actuator stopped before reaching commanded position

**Table 11 illustrates the complete hierarchy. your menu parameters may be different depending on your configuration.*

CHECKOUT TESTS

Use the Checkout menu (see Table 11) to test the damper operation and any configured outputs. Only items that are configured are shown in the Checkout menu.

NOTE: See User Interface for information about menu navigation and use of the keypad.

To perform a Checkout test:

1. Scroll to the desired test in the Checkout menu using the ▲ and ▼ buttons.
2. Press the ↵ button to select the item.
3. RUN? appears.
4. Press the ↵ button to start the test.
5. The unit pauses and then displays IN PROGRESS.
6. When the test is complete, DONE appears.
7. When all desired parameters have been tested, press the ⓘ (Menu up) button to end the test.

Checkout test can be performed at any time during the operation of the system as a test that the system is operable.

LEGEND

LCD – Liquid Crystal Display
MAT – Mixed Air Temperature
OAT – Outdoor Air Temperature
OCC – Occupied
RAT – Return Air Temperature
RTU – Rooftop Unit

⚠ CAUTION

EQUIPMENT DAMAGE HAZARD

Failure to follow this caution may result in damage to equipment

Be sure to allow enough time for compressor startup and shutdown between checkout tests so that you do not short-cycle the compressors.

W7220 ECONOMIZER MODULE WIRING

Use tables 12 and 13 to locate the wiring terminals for the Economizer module.

Table 12 - Economizer Module - Left Hand Terminal Blocks

Label	Type	Description
Top Left Terminal Block		
MAT **MAT**	20k NTC and COM	Mixed Air Temperature Sensor (Polarity insensitive connections)
OAT **OAT**	20k NTC and COM	Outdoor Air Temperature Sensor (Polarity insensitive connection)
S—BUS **S—BUS**	S—BUS (Sylk Bus)	Enthalpy Control Sensor (Polarity insensitive connection)
Bottom Left Terminal Block		
IAQ 2—10	2—10 Vdc	Air Quality Sensor Input (e.g. CO_2 sensor)
IAQ COM	COM	Air Quality Sensor Common
IAQ 24V	24 Vac	Air Quality Sensor 24 Vac Source
ACT 2—10	2—10 Vdc	Damper Actuator Output (2—10 Vdc)
ACT COM	COM	Damper Actuator Output Common
ACT 24V	24 Vac	Damper Actuator 24 Vac Source

Table 13 - Economizer Module - Right Hand Terminal Blocks

Label	Type	Description
Top Right Terminal Block		
	n/a	The first terminal is not used
AUX2 I	24 Vac IN	Shut Down (SD) or Heat (W) Conventional only and Heat Pump Changeover (O/B) in Heat Pump mode.
OCC	24 Vac IN	Occupied / Unoccupied Input
E - GND	E—GND	Earth Ground - System Required
EXH1	24 Vac OUT	Exhaust Fan 1 Output
AUX1 O	24 Vac OUT	Programmable: Exhaust fan 2 output or ERV or System alarm output
Bottom Right Terminal Block		
Y2—1	24 Vac IN	Y2 in - Cooling Stage 2 Input from space thermostat
Y2—O	24 Vac OUT	Y2 out - Cooling Stage 2 Output to stage 2 mechanical cooling
Y1—I	24 Vac IN	Y1 in - Cooling Stage 2 Input from space thermostat
Y1—O	24 Vac OUT	Y1 out - Cooling Stage 2 Output to stage 2 mechanical cooling
C	COM	24 Vac Common
R	24 Vac	24 Vac Power (Hot)

Time-out and Screen Saver

When no buttons have been pressed for 10 minutes, the LCD displays a screen saver, which cycles through the Status items. Each Status item displays in turn and cycles to the next item after 5 seconds.

START-UP AND OPERATION

Cooling with Economizer — For Occupied mode operation of economizer, there must be a 24-v signal at terminals R and OCC (provided through PL6-3 from the unit's IFC coil). Removing the signal at OCC places the economizer control in Unoccupied mode. See Table 14 for Damper Position Control.

During Occupied mode operation, indoor fan operation will be accompanied by economizer dampers moving to Minimum Position setpoint for ventilation. If indoor fan is off, dampers will close. During Unoccupied mode operation, dampers will remain closed unless a Cooling (by free cooling) or DCV demand is received.

When free cooling using outside air is not available, the unit cooling sequence will be controlled directly by the space thermostat. Outside air damper position will be closed or Minimum Position as determined by Occupancy mode and fan signal.

When free cooling is available as determined by the appropriate changeover command (dry bulb, outdoor enthalpy, differential dry bulb or differential enthalpy), a call for cooling (Y1 closes at the thermostat) will cause the economizer control to modulate the dampers open and closed to maintain the unit mixed air temperature. Default mixed air temperature is 53°F, with a range of 38°F to 70°F. Compressor will not run.

Should 100% outside air not be capable of satisfying the space temperature, space temperature will rise until Y2 is called for. The economizer control will call for compressor operation. Dampers will modulate to maintain MAT at set point concurrent with Compressor 1 operation. The "Low T Lock" setting (default 32°F) will lock out compressor operation when outside air temperature is below setpoint.

When space temperature demand is satisfied (thermostat Y1 opens), the dampers will return to Minimum Damper position if indoor fan is running or fully closed if fan is off.
If accessory power exhaust is installed, the power exhaust fan motors will be energized by the economizer control as the dampers open above the EXH1 SET setpoint and will be de-energized as the dampers close below the EXH1 SET setpoint. (For single speed unit.)

Damper movement from full closed to full open (or vice versa) will take between 1 1/2 and 2 1/2 minutes.

Heating with Economizer — During Occupied mode operation, indoor fan operation will be accompanied by economizer dampers moving to Minimum Position setpoint for ventilation. If indoor fan is off, dampers will close. During Unoccupied mode operation, dampers will remain closed unless a DCV demand is received.

When the room temperature calls for heat (W1 closes), the heating controls are energized.

Table 14 - Damper Position Control, 2-Speed Fan Motor, Economizer Cooling Not Available

INPUT	VOLTAGE				
OCC	0 - V	24 - V	24 - V	24 - V	24 - V
Y1	0 - V	0 - V	24 - V	24 - V	0 - V
Y2	0 - V	0 - V	0 - V	24 - V	0 - V
W1	0 - V	0 - V	0 - V	0 - V	24 - V
SUPPLY FAN MOTOR SPEED					
SUPPLY FAN MOTOR SPEED	OFF	LOW	LOW	HIGH	HIGH
DAMPER POSITION	**DAMPER POSITION**				
NO CO2 SENSOR	CLOSED	MIN POS-L	MIN POS-L	MIN POS-H	MIN POS-H
W/ CO2 SENSOR	CLOSED	FROM VENTMIN L TO VENTMAX L	FROM VENTMIN L TO VENTMAX L	FROM VENTMIN H TO VENTMAX H	FROM VENTMIN H TO VENTMAX H

TROUBLESHOOTING

For a list of common operating issues and concerns see Table 15.

Power Loss (Outage or Brownout) — All setpoints and advanced settings are restored after any power loss or interruption, as all settings are stored in the economizer controller's non-volatile flash memory.

NOTE: If power goes below 18 Vac, the W7220 module assumes a power loss and the 5-minute power up delay will become functional when power returns above 18 vac.

Alarms — The economizer module provides alarm messages that display on the 2-line LCD.

NOTE: Upon power up, the module waits several seconds before checking for alarms. This allows time for all the configured devices (e.g. sensors, actuator) to become operational.
If one or more alarms are present and there has been no keypad activity for at least 5 minutes, the Alarms menu displays and cycles through the active alarms.
The Alarms menus can be navigated at any time. See Table 11 for the Alarms menu.

Clearing Alarms — Once the alarm has been identified and the cause has been removed (e.g. replaced faulty sensor). They can be cleared from the display.

To clear an alarm, perform the following:

1. Navigate to the desired alarm.
2. Press the button.
3. ERASE? displays.
4. Press the button.
5. ALARM ERASED displays.
6. Press the ⓘ (Menu Up/Exit) button to complete the action and return to the previous menu.

NOTE: If the alarm still exists after you clear it, it is redisplayed within 5 seconds.

Table 15 - Operating Issues and Concerns

Issue or Concern	Possible Cause and Remedy
My outdoor temperature reading on the STATUS menu is not accurate	Check the sensor wiring: • Enthalpy sensors are to be wired to the S-Bus terminals. • Temperature sensors are to be wired to the OAT and MAT terminals.
If my enthalpy sensor drifts in accuracy over time, can I re-calibrate it?	The sensor is not able to be re-calibrated in the field. However there is a menu item under the ADVANCED menu where you are able to input a limited off set in temperature and humidity for each sensor you have connected to the economizer.
Can I go back to factory defaults and start over?	Under the SYSTEM SETUP menu you can change the setpoints to the factory defaults.
Will I be able to see the LCD screen when it is in the unit?	The LCD screen has a backlight that is always illuminated.
What is a good setpoint for the Mixed Air Temperature (MAT)?	The mixed are temperature is the temperature of air that you want to supply to the space. In a commercial building, this is between 50 to 55°F (10 to 13°C). The mixed are is the mixing of the return air and the outdoor air.
I am using enthalpy sensors. Why did the control ask me to input a dry bulb changeover temperature?	In the event the humidity sensor in the enthalpy sensors fails, the backup algorithm in the control is to default to the temperature sensor in the enthalpy sensor.
In checkout, the outdoor damper closes when I command it to open.	Check the actuator linkage or rotation. In the CHECKOUT mode, the outdoor damper should drive open or closed with the return air damper having the opposite effect.
How do I set my minimum position when using a CO2 sensor?	The minimum position is set using the VENTMIN and VENTMAX setup in the SETPOINTS menu. VENTMIN is the minimum ventilation required when using an occupancy sensor and VENTMAX is the minimum ventilation when not using an occupancy sensor for Demand Control Ventilation. The VENTMAX position is set the same as with the potentiometer on the analog economizers and is the output voltage to the damper actuator. The range is 2 Vdc closed OA damper and 10 Vdc open OA damper.
What if my damper does not go completely closed in the checkout operation?	Check the damper linkage or hub to make sure the damper is able to close completely.
Does the economizer save my program values if the unit loses power?	Yes, once the changes are stored in the controller they will be stored until they are changed by the operator.
If the unit is left in checkout, how long will the unit stay in checkout mode without input?	The unit will remain in checkout for 10 minutes, then return to normal operation.

Manufacturer reserves the right to discontinue, or change at any time, specifications, designs and prices without notice and without incurring obligations.