SHOEMAKER MANUFACTURING 1.866.940.0696 sm@shoemakermfg.com

Residential Submittal

Step Down Round Ceiling Diffuser

MODEL: 90 Series

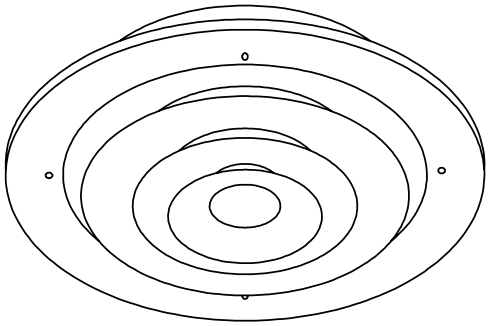

Standard Features:

- Attractive concentric ring deflects air stream 360°
- Steel construction
- Ideal for residential and light commercial applications
- Countersunk mounting holes with color matching Phillips Posidriv screws
- Rust resistant pre-coat with durable powder finish
- Soft white

Options:

- ☐ Bowtie damper with installation ring (91)
- ☐ Installation ring only (92)
- ☐ T-20 Tamper Proof Screws

Finishes:

STANDARD COLORS

- ☐ Soft White
- ☐ Driftwood Tan

DESIGNER COLORS

- ☐ Black
- ☐ Bronze
- ☐ Storm Gray
- ☐ Cement Gray
- ☐ Aluminum Paint
- ☐ Coffee Tan
- ☐ Warm White
- ☐ Glossy White

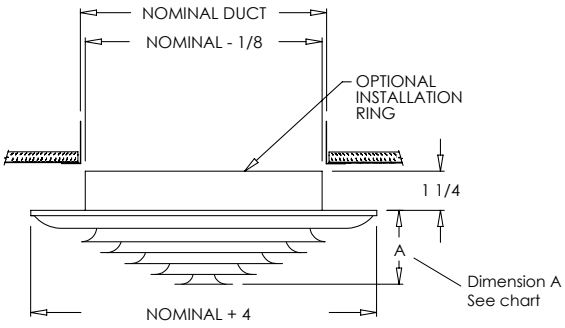

90

90 Series Dimensions (in inches)

SIZE	6"	8"	10"	12"	14"
Dimension (A)	1 1/2"	1 3/4"	2 1/4"	2 1/2"	2 3/4"

Note ID lengths 1/4" undersized nominal

Additional Information:

Project / Location:	Submittal Notes
Engineer:	
Architect:	
Contractor:	