SERVICE PARTS LIST

BULLETIN NO. 54-40-2742

SPECIFY CATALOG NO. AND SERIAL NO. WHEN ORDERING PARTS		REVISED BULLETIN	DATE
M18™ FUEL™ HACKZALL® Reciprocating Saw		54-40-2741	Jan. 2022
CATALOG NO. 2719-20	STARTING SERIAL NO. **H98C**	WIRING INSTRUCTION	**SEE PAGE 3**

00 / 0 **EXAMPLE:** Component Parts (Small #) Are Included When Ordering The Assembly (Large #).

★ = **Part number change** from previous service parts list.

Alignment Plugs- For Service Only
Plugs are furnished in Gear Case Kits #6 and #7. Plugs are not components of the tool. DO NOT DISCARD after use. Save for other possible service applications.

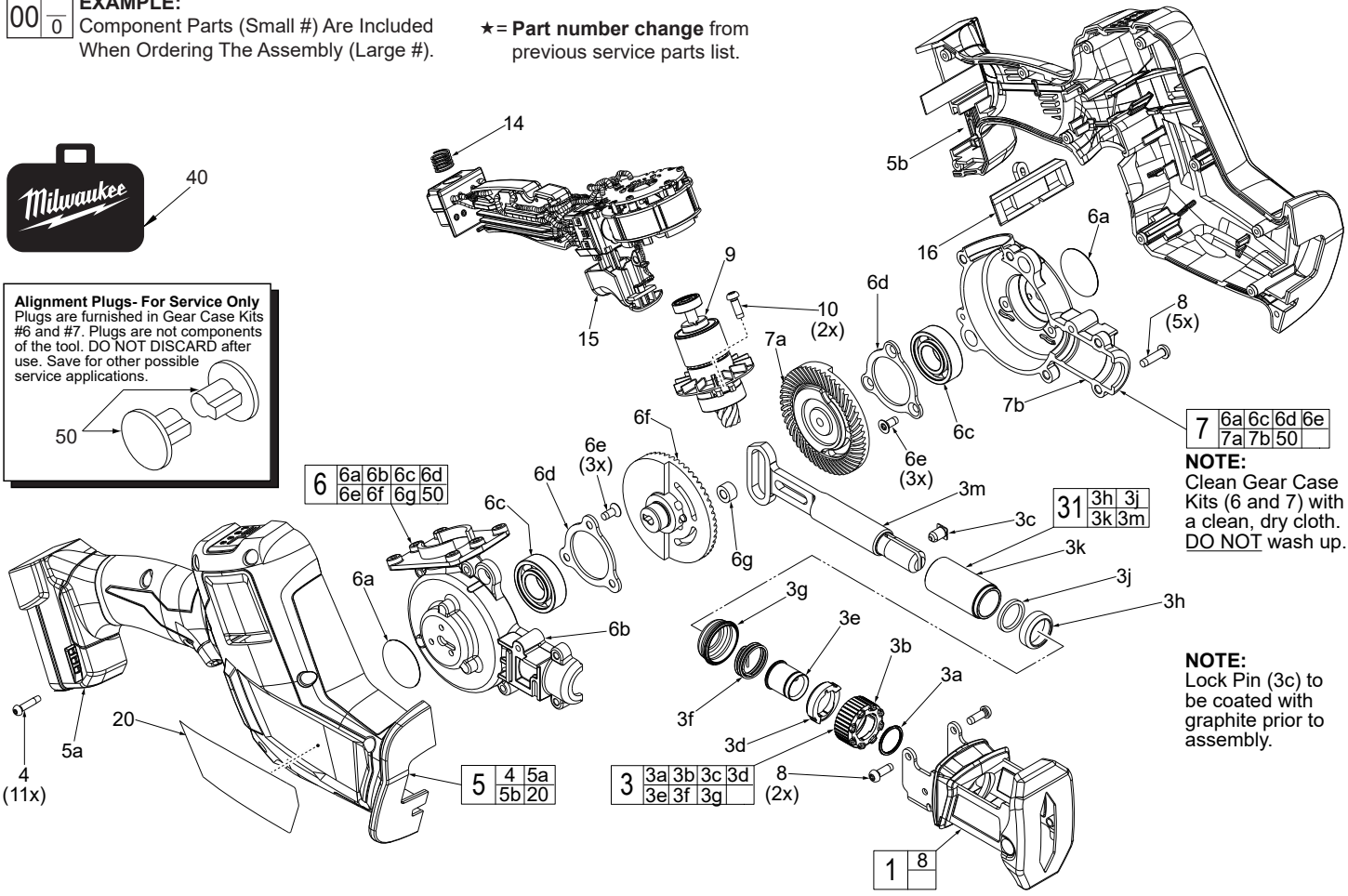

FIG.	PART NO.	DESCRIPTION OF PART	NO. REQ.
1	45-16-0927	Shoe/Water Barrier Assembly	(1)
3	14-46-1011	Steel Quik-Lok® Blade Clamp Kit	(1)
3a	34-60-3680	Retaining Ring	(1)
3b	42-50-0076	Front Cam	(1)
3c	44-60-0626	Lock Pin	(1)
3d	42-50-0077	Rear Cam	(1)
3e	45-22-0081	Sleeve	(1)
3f	40-50-0161	Torsion Spring	(1)
3g	31-15-0511	Spring Cover	(1)
3h	44-86-0740	Front Cap	(1)
3j	45-06-0880	Felt Seal	(1)
3k	----------	Spindle Bushing	(1)
3m	----------	Spindle Shaft	(1)
4	06-82-2025	M3.5 x 16mm Pan Hd. Plast. T-10 Scr.	(11)
5	31-44-0531	Housing Kit	(1)
5a	----------	Housing Cover - Right Housing	(1)
5b	----------	Housing Support - Left Housing	(1)
★ 6	14-30-1034	Right Gear Case Kit	(1)
6a	23-70-3350	Aluminum Tape	(2)
6b	----------	Gear Case - Right	(1)
6c	----------	Ball Bearing	(2)
6d	----------	Bearing Plate	(2)
6e	----------	Bearing Plate Screw	(6)
★ 6f	----------	Spiral Beval Gear	(1)
6g	44-86-0803	Drive Pin Sleeve	(1)
★ 7	14-30-1044	Left Gear Case Kit	(1)
★ 7a	----------	Spiral Bevel Gear	(1)
7b	----------	Gear Case - Left	(1)
8	06-82-5320	8-32 x 5/8 Pan Hd Slt. T-20 Screw	(7)

FIG.	PART NO.	DESCRIPTION OF PART	NO. REQ.
★ 9	16-01-0901	Rotor Assembly	(1)
10	05-78-0105	M4 x 10mm Pan Hd. Taptite T-20 Scr	(2)
14	40-50-1090	Terminal Block Spring	(1)
15	14-20-2719	Electronic Assembly	(1)
16	45-24-0682	Locking Shuttle	(1)
20	12-20-1119	Service Nameplate	(1)
31	38-50-0415	Spindle/Bushing Kit	(1)
40	50-55-3560	M18 FUEL Contractor Bag	(1)
50	31-53-0280	Alignment Plug - Service Tool (Not component of tool - one per in kits 6 & 7)	

FIG.	LUBRICATION (Type 'L' Grease, No. 49-08-4175):
3h,3j	Saturate Felt (3j) with lightweight oil prior to assembly with Cap (3h) onto Bushing (3k) and Spindle (3m).
3k,3m	Lightly coat the O.D. of Spindle Shaft (3m) and I.D. of Bush ing (3k) with grease.
3m	Place a dab of grease in the rear slot of Spindle Shaft (3m).
6b,7b	Place .25 ounce grease in gear cavity of Gear Cases (6b,7b). Coat the spindle shaft pocket in Gear Cases (6b,7b).
6f,6g	Lightly coat the Drive Pin of Spiral Bevel Gear (6f) and I.D. and O.D. of Bearing Sleeve (6g) with grease.
6f,7a,9	Completely coat all of the teeth of the Spiral Bevel Pinion on Rotor (9) and Spiral Bevel Gears (6f,7a) with grease.

MILWAUKEE TOOL ● www.milwaukeetool.com
13135 W. Lisbon Road, Brookfield, WI 53005
Drwg. 1

Picture 'A'

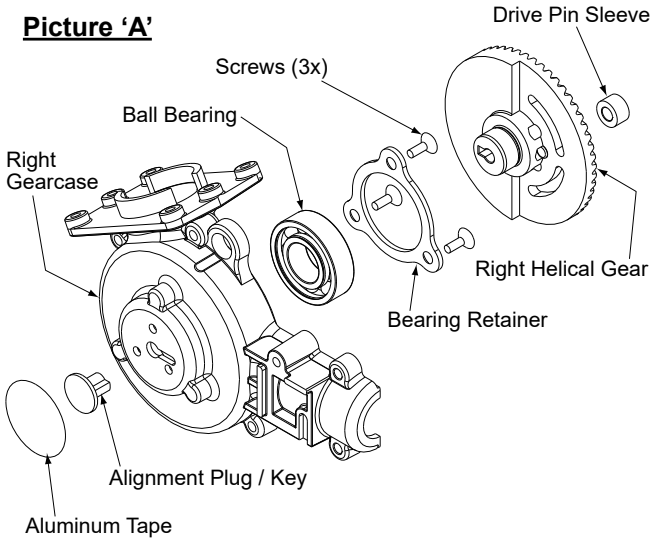

Components of **Right Gearcase Kit #14-30-1034**

Picture 'B'

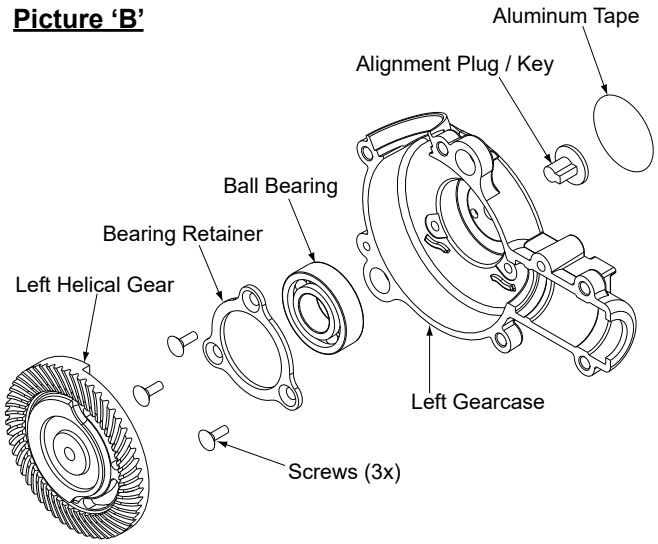

Components of **Left Gearcase Kit #14-30-1044**

Picture "A and B" show the components that make-up the Right and Left Gearcase kits for M18™ FUEL™ Hackzall® 2719-20. Each kit contains one [1] Alignment Plug / Key and [1] round Aluminum adhesive backed disc (not sold separately) which will be needed when servicing / replacing the gearcase assemblies of the M18™ FUEL™ Hackzall®.

The Right and Left helical gear assemblies are supported independently in their respective gearcase assembly and turn independently. Each of the helical gears have a counter weight and when the two gearcase halves are assembled together **gearing must be synchronized to eliminate excessive vibration.**

Synchronization of the two gear case halves can be accomplished by using the Alignment Plug / Key supplied with each gearcase kit. Anytime rotor assembly 16-01-0901 has to be removed from the gearcase halves, helical gears will need to be resynchronized using the alignment plug / keys.

Synchronizing / Assembling Gearcase Kit Assemblies 14-30-1034 – 14-30-1044

Once the **rotor assembly** has been removed from the gearcase assembly the keyway cut into each **helical gear** will no longer be aligned with the **gearcase keyway** (fig. 1) due to the counter balance of the helical gear.

1. Rotate (by hand) **helical gear** in right gearcase (picture "A") until **helical gear keyway** is in-line with the **gearcase keyway** (fig. 2).
2. Install **plug / key** from kit into gearcase / helical gear keyway (fig. 3).
3. Install **drive pin sleeve** onto pin located on right helical gear (coat with type "L" grease).
4. Install **spindle / gearcase bushing assembly** into right gearcase (coat components with type "L" grease and make sure spindle lock pin hole faces right gearcase).
   Note: If new felt seal is being installed saturate seal with a lightweight oil.
5. Place approximately 1/8oz. Type "L" grease onto teeth of right helical gear. (Set assembly aside).
6. Rotate (by hand) **helical gear** in left gearcase (picture "B") until **helical gear keyway** is in-line with the **gearcase keyway** (fig. 2).
7. Install **plug / key** from kit into gearcase / helical gear keyway (fig. 3).
8. Place approximately 1/8oz. Type "L" grease onto teeth of left helical gear.
9. Assemble lubricated left gearcase assembly onto lubricated right gearcase assembly and install five [5] gearcase screws.
10. Install rotor assembly 16-01-0901 and secure to gearcase assembly.
11. Remove left and right alignment plug (s) and apply aluminum tape disc from kits to each side of gearcase (fig.4). **SAVE PLUGS in case rotor needs servicing or replacing.**

FIG. 1

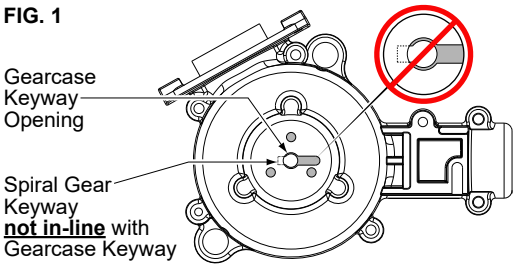

FIG. 2

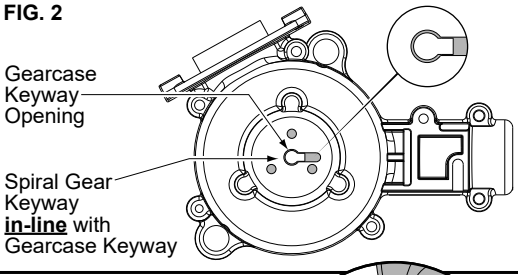

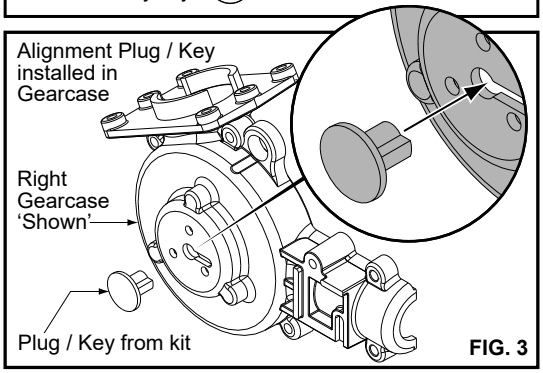

FIG. 3

With pinion of Rotor Assembly secured in Gear Case Kits, remove and save Alignment Plug/Keys. Apply Aluminum Tape from kits as shown. Stator of the Electronic Assembly is than carefully placed over Rotor Assembly.

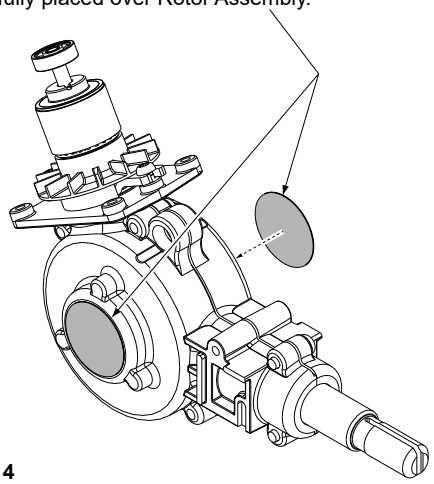

FIG. 4

REMOVING THE STEEL QUIK-LOK® BLADE CLAMP (3)

- Remove external retaining ring (3a) and pull front cam (3b) off.
- Pull lock pin (3c) out and remove remainder of parts and discard.

REASSEMBLY OF THE STEEL QUIK-LOK® BLADE CLAMP (3)

- Coat new lock pin with powdered graphite.
- Hold tool in a vertical position.
- Place spring cover (3g) onto spindle.
- Slide torsion spring (3f) onto spindle with spring leg on hole side of spindle.
- Slide sleeve (3e) onto spindle aligning hole on sleeve with hole in spindle.
- Slide rear cam (3d) over sleeve (3e) until it bottoms on sleeve shoulder, ensure leg of spring (3f) inserts into inner slot in rear cam (3d).
- Rotate rear cam in the direction of the arrows located on spring cover until there is clearance for lock pin (3c) to be inserted into sleeve/spindle holes. Insert lock pin.
- Align front cam (3b) inner ribs with rear cam outer slots and slide front cam onto sleeve until it bottoms. Retaining ring groove on the spindle shaft (3m) should be completely visible.
- Attach retaining ring (3a) by separating coils and inserting end of ring into groove, then wind remainder of ring into groove. Ensure ring is seated in groove.
- Blade clamp should rotate freely. During normal usage, debris may not allow blade clamp to rotate freely. The use of spray lubricant can help free blade clamp. In extreme conditions, follow these instructions to remove, clean and reassemble blade clamp.

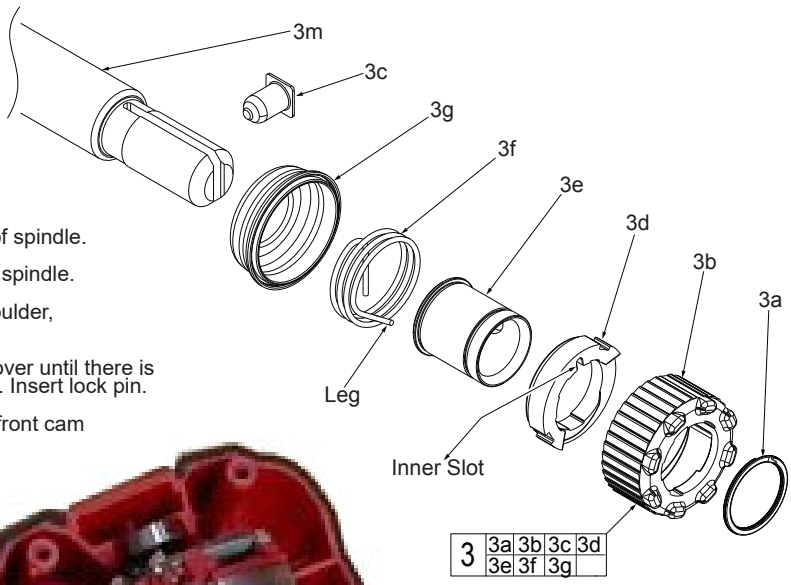

WIRING

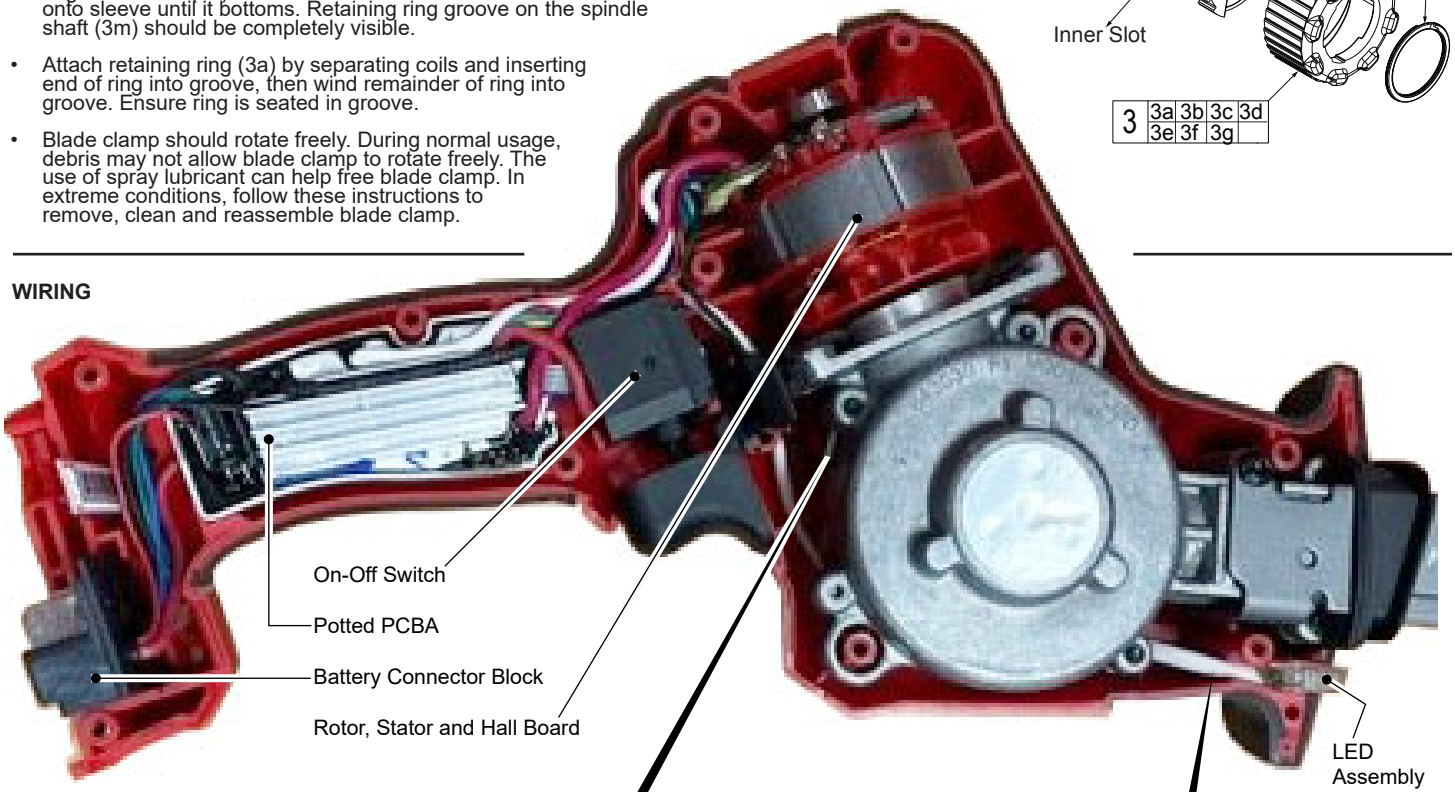

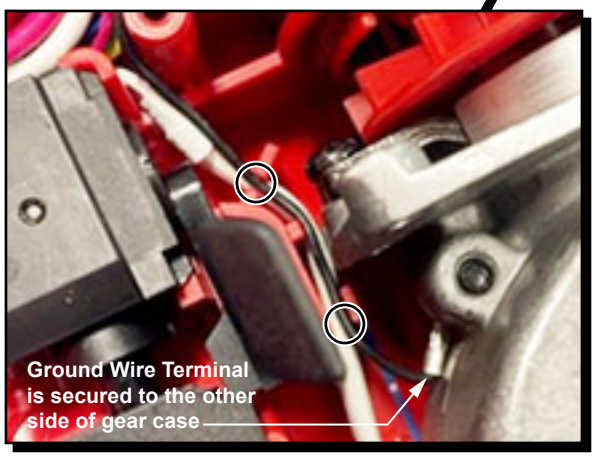

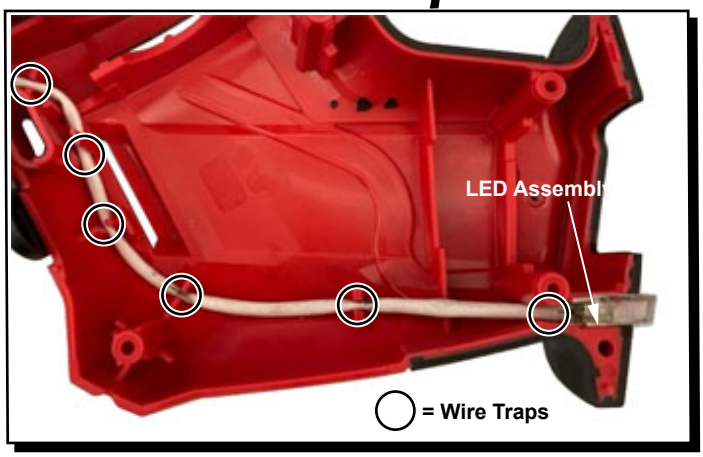

- As an aid to reassembly, take note of wire routings and position in wire guides and traps while dismantling tool.
- Be sure all components are firmly and squarely seated in handle cavities.
- Be careful and avoid pinching wires between housing halves by tucking wires completely down in traps and channels when assembling.
- Prior to installing battery, check for proper functionality of switches, slides and buttons after housing halves are secure.
- Install battery and verify the proper operation of tool.

SCREW TORQUE SPECIFICATIONS

FIG.	PART NO.	WHERE USED	SEAT TORQUE (KG/CM)	SEAT TORQUE (IN/LBS)
4	06-82-2025	Housing Cover	5-8	4.3-6.9
6e	----------	Bearing Plate	14-18	12.1-15.6
8	06-82-5320	Gear Case-Left	36-42	31.2-36.4
10	05-78-0105	Rotor Assembly	24-30	20.8-26.0