SERVICE PARTS LIST

BULLETIN NO.
54-05-2705

SPECIFY CATALOG NO. AND SERIAL NO. WHEN ORDERING PARTS				REVISED BULLETIN	DATE
M18 FUEL™ BLOWER					Aug. 2022
CATALOG NO.	**2724-20**	STARTING SERIAL NO.	**J24A**	WIRING INSTRUCTION **See Page 2**	

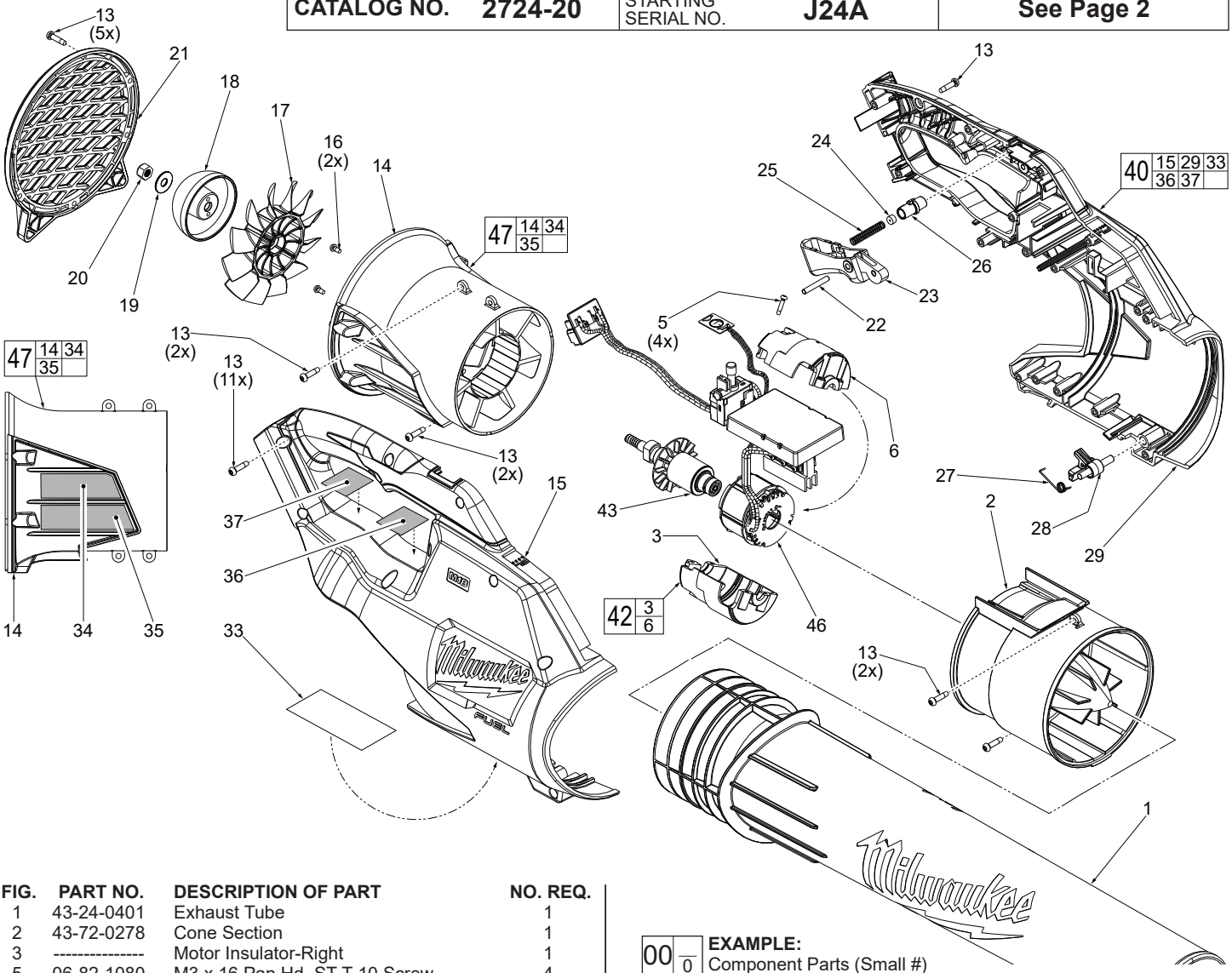

FIG.	PART NO.	DESCRIPTION OF PART	NO. REQ.
1	43-24-0401	Exhaust Tube	1
2	43-72-0278	Cone Section	1
3	----------	Motor Insulator-Right	1
5	06-82-1080	M3 x 16 Pan Hd. ST T-10 Screw	4
6	----------	Motor Insulator-Left	1
13	06-82-4003	M4 x 16 Pan Hd. Taptite T-20 Screw	23
14	----------	Bell Tube	1
15	----------	Housing Cover - Right Housing Halve	1
16	06-82-3835	#6-19 PT T-15 Screw	2
17	22-84-0006	Fan	1
18	42-92-0001	Fan Dome	1
19	45-88-0161	Washer	1
20	05-55-0033	M7 x 1 Hex Nut	1
21	31-15-0048	Intake Vent Cover	1
22	06-65-0063	Steel Pin	1
23	45-72-0022	Trigger	1
24	44-52-0003	Lock Button Cushion	1
25	40-50-0277	Lock-On Spring	1
26	42-42-0027	Lock-On Button	1
27	40-50-0064	Nozzle Lock Spring	1
28	44-20-0077	Nozzle Lock	1
29	----------	Housing Support - Left Housing Halve	1
33	12-20-0200	Service Nameplate	1
34	10-20-1352	Caution Label - English	1
35	10-20-1353	Caution Label - Spanish and French	1
36	10-20-0778	Caution Label - Symbols #1	1
37	10-20-0926	Caution Label - Symbols #2	1
40	31-44-2724	Housing Kit	1
42	23-16-0110	Motor Insulator Kit	1
43	16-01-0065	Rotor Assembly	1
46	14-20-2724	Electronics Assembly	1
47	43-72-0006	Bell Tube Assembly	1

00 0 **EXAMPLE:**
Component Parts (Small #)
Are Included When Ordering
The Assembly (Large #).

SCREW TORQUE SPECIFICATIONS

FIG.	PART NO.	WHERE USED	SEAT TORQUE (KG/CM)	SEAT TORQUE (IN/LBS)
13	06-82-4005	Housing, Static Fan	7-8	6-7
5	06-82-1080	Motor Insulator	4-8	3.4-6.9
16	06-82-3835	Static Fan	3-6	2.6-5.2
20	05-55-0033	Fan	17-20	14.7-17.3

FIG.	NOTES
40	Prior to taking tool apart, use a sharp razor blade to score the center line of nameplate (33) and symbol labels (36 and 37). This will allow housing halves (15 and 29) to separate when housing screws are removed.
33,34, 35,36, 37	A clean, dry surface is essential for proper performance for any adhesive system. The area intended for application of any adhesive label or nameplate must be prepared by cleaning with isopropyl alcohol. The solvent is to be applied with a clean, lint free applicator and the surface allowed to dry before applying any label or nameplate.

MILWAUKEE TOOL • www.milwaukeetool.com
13135 W. Lisbon Road, Brookfield, WI 53005

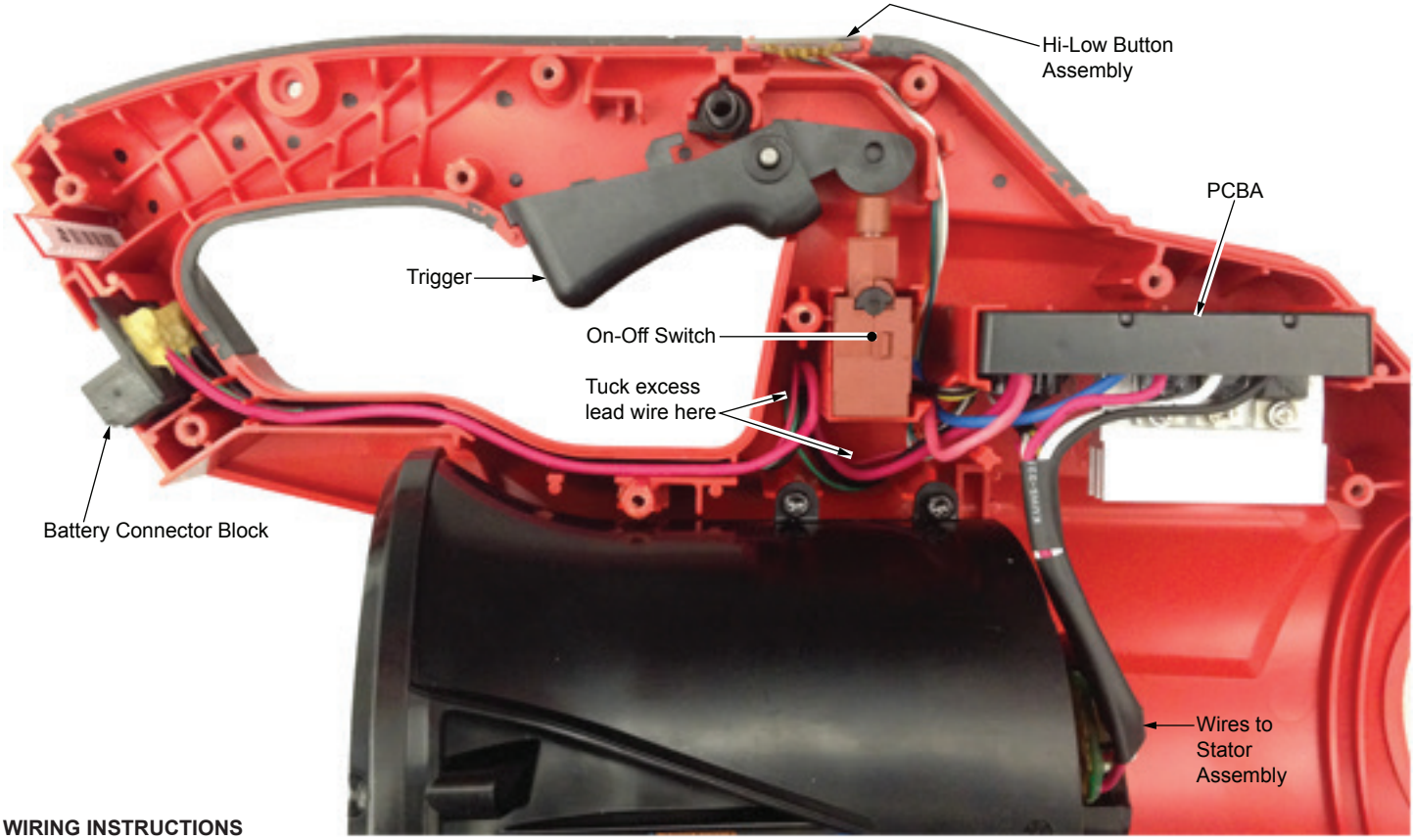

WIRING INSTRUCTIONS

As an aid to reassembly, take notice of wire routing and position in wire guides and traps while dismantling tool. Be careful and avoid pinching wires between handle halves when assembling.

- Place PCBA and the On-Off Switch of Electronics Assembly (46) squarely and firmly in place in the corresponding Housing Support (29) cavities.
- Route wires from the Switch and PCBA as shown, tucking the wires down into wire traps.
- Install Battery Connector Block squarely and firmly into Housing Support. Route wires through Housing Support channel (removing any slack along the way). Be sure wires are pushed down into the wire traps. Place excess wires in housing cavity as shown.
- Install the Hi-Low Button and route wires as shown. Be sure wires are pushed down completely in traps and channels.
- Place Cone Section (2) onto Bell Tube (14), place squarely into Housing Support (29) and secure with 6 Screws (13).
- Be sure the Trigger (23), Spring (25), Cushion (24) and Lock Button (26) are properly in place.
- Be sure the Nozzle Lock and Nozzle Lock Spring (27 and 28) are in place.
- Secure housing halves together using 12 Screws (13) on the cover side and 1 Screw on the support side.
- Check for the proper functionality of the Switch Trigger (23) and Lock Button (26).
- Insert battery pack and check tool for proper operation.

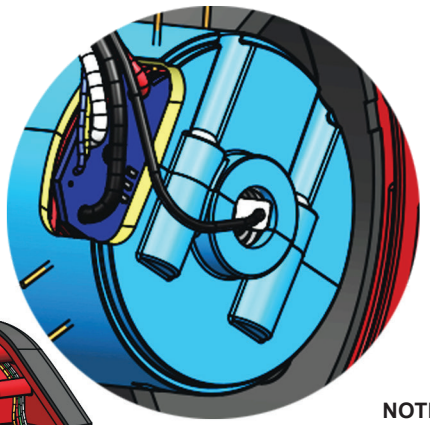

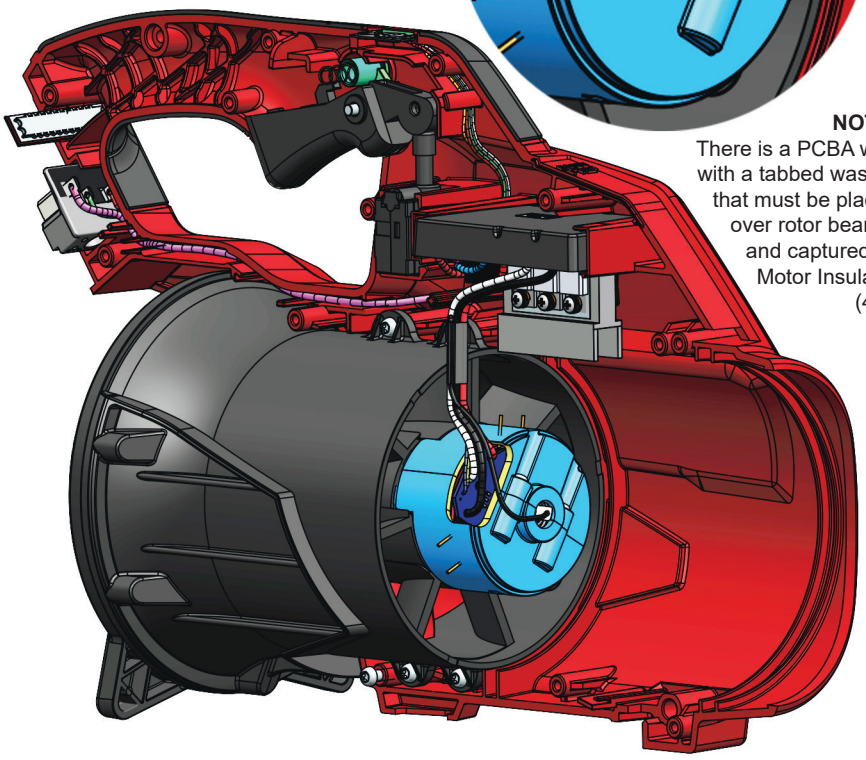

NOTE: There is a PCBA wire with a tabbed washer that must be placed over rotor bearing and captured in Motor Insulator (42).