Honeywell

Wi-Fi VisionPRO® 8000

SUBMITTAL SHEET

APPLICATION

Wi-Fi VisionPRO allows remote access through a Smartphone, Tablet or Computer. It controls Up to 3H/2C Heat Pump systems or up to 2H/2C Conventional systems. Thermostat is selectable for Residential or Light Commercial applications. The thermostat have a Universal Relay to control humidification, humidification or ventilation.

- The thermostat is equipped with a touchscreen display with a 2 line message center.
- Provides Remote Access through Smartphone, Tablet or Computer when connected to Wi-Fi and registered to mytotalconnectcomfort.com
- Provides lockout temperatures for auxiliary heat and/or compressor lockout in Heat Pump system using the wired outdoor sensor accessory or using the outdoor information from the cloud if no wired sensor is used, but the thermostat is connected to Wi-Fi and registered.

SPECIFICATIONS

Terminal Designations:
TH8321WF Thermostat: R, RC, C, W-O/B, W2-AUX/E, Y, Y2, G, A-L/A, K, U1 U1, S1 S1

Electrical Ratings (for VisionPRO and Equipment Interface Module):

Terminal	Voltage (50/60 Hz)	Max. Current Rating
W - O/B	18 to 30 VAC	1.00A
Y (cooling)	18 to 30 VAC	1.00A
G (fan)	18 to 30 VAC	0.50A
W2 - Aux/E	18 to 30 VAC	0.60A
Y2 (cooling)	18 to 30 VAC	0.60A
A-L/A (Output)	18 to 30 VAC	1.00A
U1, U1	30 VAC max.	0.50A

Power Consumption of TH8321WF Thermostat:
Backlight on: 2.35 VA

Backlight off: 1.40 VA

Wi-Fi Communication Requirements:
802.11 b/g/n routers

Android or IOS Smartphone, tablet or device

Temperature Setting Range:
Heating: 40 to 90 °F (4.5 to 32 °C)

Cooling: 50 to 99 °F (10 to 37 °C)

Temperature Sensor Accuracy:
± 1.5 °F at 70 °F (0.75 °C at 21.0 °C)

Humidification Setting Range: 10% to 60% RH

Dehumidification Setting Range: 40% to 80% RH

Humidity Display Range: 0% to 99%

Humidity Sensor Accuracy:
± 5% RH from 30% to 50% RH at 75 °F (24 °C)

Cool Indication:
Displays “Cool On” when the thermostat turns the cooling on.

Heat Indication:
Displays “Heat On” when the thermostat turns the heating on.

Auxiliary Heat Indication:
Displays “Aux Heat On” when the thermostat turns the auxiliary heat on.

Interstage Differential:
Comfort: The thermostat keeps the indoor temperature within 1 degree of the setpoint (droop less control). The thermostat turns on stage 2 when the capacity on stage 1 reaches 90%.

When the interstage differential is set to 1.0 or higher, the thermostat stages the equipment based on how far the indoor temperature is from the setpoint.

Clock Accuracy:
If not connected to Wi-Fi: 1 minute per month at 77 °F (25 °C). ± 2 minutes per month over the operating ambient temperature range.

If connected to Wi-Fi and registered to Total Connect Comfort: the current time is synced via the Internet.

Mounting Means:
Thermostat mounts directly on the wall in the living space using mounting screws and anchors provided. Fits a horizontal 2 x 4 in. junction box. Use a cover plate and its mounting bracket to mount the thermostat onto a vertical 2 x 4 in. junction box.

Job Name _____

Engineer _____

Mechanical Contractor _____

Contractor’s P.O. No. _____

Representative _____

Notes _____

Model(s)

TH8321WF1001 ☐ **Qty.** _____ **Notes** _____

Approval _____

Service _____

Tag No. _____

Product	Part Number	Operating Ambient Temperature	Operating Relative Humidity	Shipping Temperature	Physical Dimensions in in. (mm)	Color(s)
Thermostat	TH8321WF1001	32 to 120 °F (0 to 48.9 °C)	5% to 90% Non-Condensing	-20 to 120 °F (-28.9 to 48.9 °C)	4-15/16 x 4-5/8 x 1-1/8 (126 x 118 x 29)	Arctic White

Dimensions of thermostat in in. (mm).

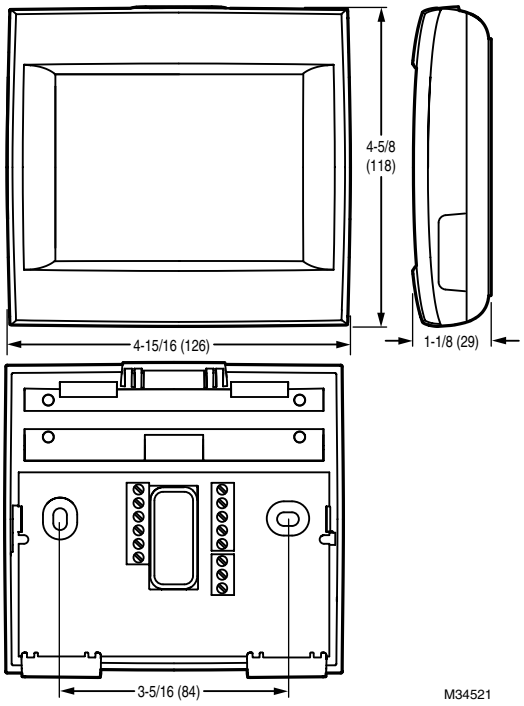

Dimensions of VisionPRO cover plate in in. (mm).

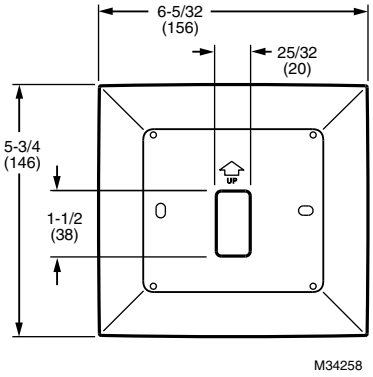

Automation and Control Solutions
Honeywell International Inc.
1985 Douglas Drive North
Golden Valley, MN 55422
customer.honeywell.com

® U.S. Registered Trademark
© 2014 Honeywell International Inc.
33-00072—01 M.S. 12-14
Printed in United States