**PG80MSA/PG80MSL**
**80% AFUE, Single-Stage, Multi 18-Speed ECM,**
**Non-Condensing Gas Furnaces**

# Product Data

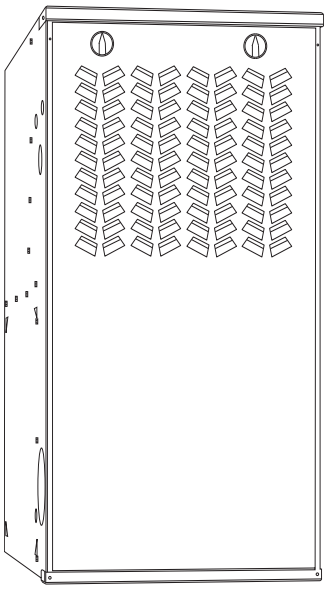

A200137

Representative drawing only. Some product models may vary.

**⚠ WARNING**

This furnace is not designed for use in mobile homes, trailers, or recreational vehicles. Such use could result in property damage and/or death.

The PG80MSA/PG80MSL applications are easy with 4-way multipoise design, through-the-furnace downflow venting, 13 different venting options, and designed for easy service access. An inner blower door is provided for tighter sealing in sensitive applications. Improved serviceability with the 3 digit status display and NFC enabled board allowing setup via the service tech app. The PG80MSA/PG80MSL furnaces are approved for use with natural or propane gas, and the PG80MSL-Low NOx units are designed for California installations and can be installed in air quality management districts with a 40 ng/J NOx emissions limit.

Use of the AHRI Certified TM Mark indicates a manufacturer's participation in the program. For verification of certification for individual products, go to www.ahridirectory.org .

ISO 9001 Quality

A200103

## PERFORMANCE

- Single Stage gas valve
- Multi 18-Speed, constant torque (MCT) ECM blower motor
- Enhanced diagnostics with easy to read 3 digit display for faults and status
- Hot surface ignition
- Draft safeguard switch designed to ensure proper furnace venting
- Inner door for tighter sealing

## INSTALLATION FLEXIBILITY

- 4-way Multipoise furnace, 13 vent applications
- On-board NFC antenna makes setup a tap away when using the service technician app
- Dual Fuel System compatible
- All models are chimney friendly when used with accessory vent kit
- Select sizes approved for twinning, refer to accessory kit listing

## APPLICATIONS

- Compact design - only 33-1/3 in. (847 mm) tall
- Propane convertible with gas conversion accessory

## CERTIFICATION

- Cabinet air leakage less than 2.0% at 1.0 in. w.c. and cabinet air leakage less than 1.4% at 0.5 in. w.c. when tested in accordance with ASHRAE standard 193

# DIMENSIONAL DATA

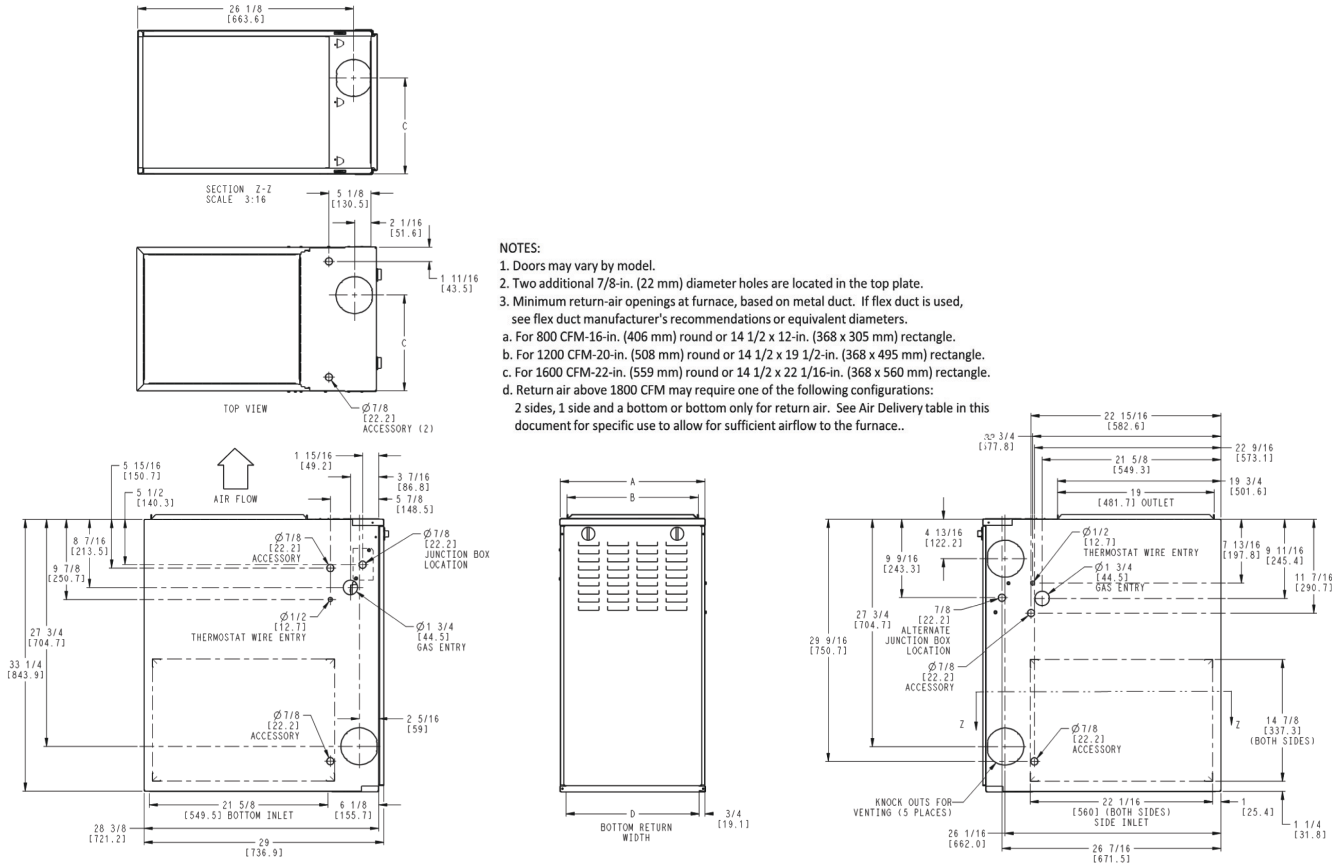


NOTE: ALL DIMENSIONS IN INCH (MM)

U.S. ECCN: Not Subject to Regulation (N.S.R.)

SD5669-4 REV. -

A210785

**Dimensions**

| Unit Size | A CABINET WIDTH | B OUTLET WIDTH | C TOP AND BOTTOM FLUE COLLAR | D BOTTOM INLET WIDTH | VENT CONNECTION SIZE | SHIP WT. LB. (KG) |
|---|---|---|---|---|---|---|
| 36045A | 14-3/16 (360) | 12-9/16 (319) | 9-5/16 (237) | 12-11/16 (322) | 4 (102) | 108 (49) |
| 42045B | 17-1/2 (445) | 15-7/8 (403) | 11-9/16 (294) | 16 (406) | 4 (102) | 121 (55) |
| 36070A | 14-3/16 (360) | 12-9/16 (319) | 9-5/16 (237) | 12-11/16 (322) | 4 (102) | 114 (52) |
| 36070B | 17-1/2 (445) | 15-7/8 (403) | 11-9/16 (294) | 16 (406) | 4 (102) | 124 (56) |
| 48070B | 17-1/2 (445) | 15-7/8 (403) | 11-9/16 (294) | 16 (406) | 4 (102) | 127 (58) |
| 48070C | 21 (533) | 19-3/8 (492) | 13-5/16 (338) | 19-1/2 (495) | 4 (102) | 139.5 (63) |
| 42090B | 17-1/2 (445) | 15-7/8 (403) | 11-9/16 (294) | 16 (406) | 4 (102) | 133 (60) |
| 48090C | 21 (533) | 19-3/8 (492) | 13-5/16 (338) | 19-1/2 (495) | 4 (102) | 140.5 (64) |
| 60090C | 21 (533) | 19-3/8 (492) | 13-5/16 (338) | 19-1/2 (495) | 4 (102) | 147 (67) |
| 60110C | 21 (533) | 19-3/8 (492) | 13-5/16 (338) | 19-1/2 (495) | 4 (102) | 150 (68) |
| 60110D | 24-1/2 (622) | 22-7/8 (581) | 15-1/16 (383) | 23 (584) | 4 (102) | 165 (75) |
| 60135D | 24-1/2 (622) | 22-7/8 (581) | 15-1/16 (383) | 23 (584) | 4 (102)* | 167 (76) |
| 60155D | 24-1/2 (622) | 22-7/8 (581) | 15-1/16 (383) | 23 (584) | 4 (102)* | 171 (77) |

*. 135 and 155 size furnaces requires a 5 or 6-in. (127 or 152 mm) vent. Use a vent adapter between furnace and vent stack. See Installation Instructions for complete installation requirements

# MODEL NUMBER NOMENCLATURE

| 1 Brand Identifier | 2 Product | 3, 4 Base Effy. | 5 Motor | 6 Heating Stages | 7 NOx Level | 8 Major Series | 9 - 10 Cooling Capacity | 11, 12, 13 Heating Input | 14 Width | 15 Minor Series | 16 Variations |
|---|---|---|---|---|---|---|---|---|---|---|---|
| P | G | 92 | E | S | A | A | 36 | 040 | A | A | A |
| P = Payne | G = Gas Furnace | 80 = 80% AFUE<br>92 = 92% AFUE<br>95 = 95% AFUE<br>96 = 96% AFUE<br>97 = 97% AFUE<br>98 = 98% AFUE | C = Constant Airflow Variable- Speed (VCA) ECM<br>V = Variable-Speed (VCT) PWM<br>M = Multi 18-Speed Constant Torque (MCT) ECM | M = Modulating<br>S = Single Stage<br>T = Two-Stage | A = Standard<br>L = Low NOx<br>U = Ultra Low NOx | A<br>B<br>C<br>--- | 24 - 800 CFM<br>30 - 1000 CFM<br>36 - 1200 CFM<br>42 - 1400 CFM<br>48 - 1600 CFM<br>54 - 1800 CFM<br>60 - 2000 CFM<br>66 - 2200 CFM | 026 = 26,000 BTU/h<br>040 = 40,000 BTU/h<br>060 = 60,000 BTU/h<br>080 = 80,000 BTU/h<br>--- | A = 14.2"<br>B = 17.5"<br>C = 21.0"<br>D = 24.5" | A<br>B<br>C<br>--- | A = Standard Configuration |

A220583

# FURNACE COMPONENTS

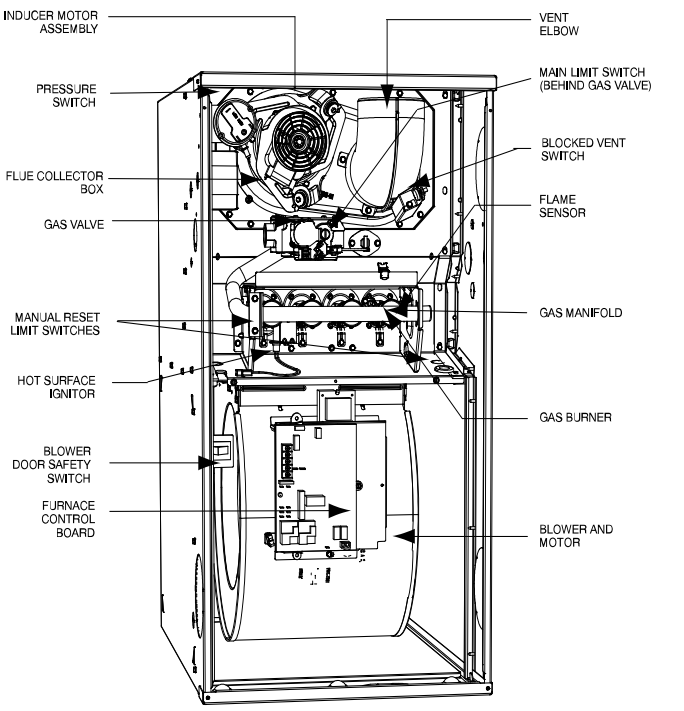


A190086

Representative drawing only, some models may vary.

The furnaces are factory shipped for use with natural gas. These furnaces can be field-converted for propane gas with a factory-authorized and listed accessory conversion kit.

# CLEARANCES

**⚠ WARNING** — ELECTRIC SHOCK AND MOVING PARTS HAZARD
High voltage and rotating fan blades may be present in blower compartment when door switch is pressed. Keep hands clear.

**⚠ WARNING**
**FIRE, EXPLOSION, ASPHYXIATION HAZARD**

**Improper adjustment, alteration, service, maintenance, or installation can cause serious injury or death.**

**Read and follow instructions and precautions in User's Information Manual provided with this furnace. Installation and service must be performed by a qualified service agency or the gas supplier.**

**⚠ CAUTION**

**Check entire gas assembly for leaks after lighting this appliance.**

**INSTALLATION**

1. This furnace must be installed in accordance with the manufacturer's instructions and local codes. In the absence of local codes, follow the National Fuel Gas Code ANSI Z223.1 / NFPA54 or CSA B-149. 1 Gas Installation Code.
2. This furnace must be installed so there are provisions for combustion and ventilation air. See manufacturer's installation information provided with this appliance.

**OPERATION**

This furnace is equipped with manual reset limit switch(es) in burner compartment to protect against overheat conditions that can result from inadequate combustion air supply or blocked vent conditions.

1. Do not bypass limit switches.
2. If a limit opens, call a quallified serviceman to correct the condition and reset limit switch.

**INSTALLATION**

**MINIMUM INCHES CLEARANCE TO COMBUSTIBLE CONSTRUCTION**

This forced air furnace is equipped for use with natural gas at altitudes 0 - 10,000 ft (0 - 3,050m).

An accessory kit, supplied by the manufacturer, shall be used to convert to propane gas use or may be required for some natural gas applications.

This furnace is for indoor installation in a building constructed on site.

This furnace may be installed on combustible flooring in alcove or closet at minimum clearance as indicated by the diagram from combustible material.

This furnace may be used with a Type B-1 Vent and may be vented in common with other gas fired appliances.

This furnace is approved for UPFLOW, DOWNFLOW, and HORIZONTAL installations.

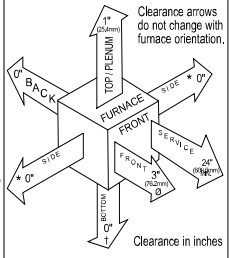


**Vent Clearance to combustibles:**
For Single Wall vents 6 inches (6 po).
For Type B-1 vent type 1 inch (1 po).

**MINIMUM INCHES CLEARANCE TO COMBUSTIBLE CONSTRUCTION**

**DOWNFLOW POSITIONS:**

† Installation on non-combustible floors only. For installation on combustible flooring only when installed on a manufacturer approved special base kit or manufacturer recommended coil assembly.

Ø 18 inches front clearance required for alcove.

* Indicates supply or return sides when furnace is in the horizontal position. Line contact only permissible between lines formed by intersections of the Top and two Sides of the furnace jacket, and building joists, studs or framing.

336996-101 REV.F

A220231

# SPECIFICATIONS

| UNIT SIZE | | 36045A | 42045B | 36070A | 36070B | 48070B | 48070C | 42090B |
|---|---|---|---|---|---|---|---|---|
| **HEATING AND CAPACITY AND EFFICIENCY** | | | | | | | | |
| **Input BTUh*** | All Standard<br>Low NOx - Upflow | 44,000 | 44,000 | 66,000 | 66,000 | 66,000 | 66,000 | 88,000 |
| | Low NOx - Dwnflw/Hz | 42,000 | 42,000 | 63,000 | 63,000 | 63,000 | 63,000 | 84,000 |
| **Output Capacity (BTUh)†** | All Standard<br>Low NOx - Upflow | 36,000 | 35,000 | 54,000 | 54,000 | 54,000 | 53,000 | 71,000 |
| | Low NOx - Dwnflw/Hz | 34,000 | 34,000 | 51,000 | 51,000 | 51,000 | 51,000 | 68,000 |
| **Certified Temperature Rise Range - °F (°C)** | | 30-60 (17-33) | 30-60 (17-33) | 30-60 (17-33) | 30-60 (17-33) | 25-55 (14-31) | 25-55 (14-31) | 40-70 (22-39) |
| **AFUE†** | | 80% | | | | | | |
| **AIRFLOW CAPACITY AND BLOWER DATA** | | | | | | | | |
| **Rated Certified External Static Pressure** | Heating | 0.10 | 0.10 | 0.12 | 0.12 | 0.12 | 0.12 | 0.15 |
| | Cooling | 0.50 | 0.50 | 0.50 | 0.50 | 0.50 | 0.50 | 0.50 |
| **Airflow CFM @ Rated ESP (CFM)‡** | Heating | 715 | 720 | 1075 | 1110 | 1310 | 1290 | 1230 |
| | Cooling | 175-1095 | 210-1285 | 180-1115 | 155-1160 | 235-1700 | 210-1820 | 330-1490 |
| **Direct Drive Motor HP** | | 1/3 | 1/2 | 1/3 | 1/3 | 3/4 | 3/4 | 1/2 |
| **Motor Full Load Amps** | | 4.4 | 6.7 | 4.4 | 4.4 | 8.8 | 8.8 | 6.7 |
| **Heating Blower Control (Htg OFF-Delay)** | | Adjustable: 90, 120 (factory-set), 150, 180 seconds | | | | | | |
| **Cooling Blower Control (Clg OFF-Delay)** | | Adjustable: 90 (factory-set), 5, 30 seconds | | | | | | |
| **Blower Wheel Diameter x Width - In. (mm)** | | 10x6 (254x152) | 10x8 (254x203) | 10x6 (254x152) | 10x8 (254x203) | 11x8 (279x203) | 10x10 (254x254) | 10x8 (254x203) |
| **Air Filtration System** | | Field Supplied Filter | | | | | | |
| **Filter used for Certified Watt Data** | | 325531-40** | | | | | | |
| **ELECTRICAL DATA** | | | | | | | | |
| **Unit Volts-Hertz-Phase** | | 115-60-1 | | | | | | |
| **Operating Voltage Range** | Min-Max | 104-127 | | | | | | |
| **Maximum Unit Amps** | | 6.0 | 7.9 | 6.0 | 5.9 | 10.4 | 10.4 | 8.2 |
| **Unit Ampacity** | | 8.3 | 10.7 | 8.3 | 8.2 | 13.8 | 13.8 | 11.0 |
| **Maximum Wire Length (Measure 1 way in Ft/M)** | | 44/13.6 | 34/10.6 | 44/13.6 | 45/13.80 | 26/8.2( | 26/8.2 | 34/10.3 |
| **Minimum Wire Size** | AWG | 14 | 14 | 14 | 14 | 14 | 14 | 14 |
| **Max. Fuse/Ckt Bkr Size (Time-Delay Type Recommended)** | Amps | 15 | 15 | 15 | 15 | 15 | 15 | 15 |
| **Transformer Capacity (24 VAC output)** | | 40VA | | | | | | |
| **External Control Power Available** | Heating | 12VA | | | | | | |
| | Cooling | 35VA | | | | | | |
| **GAS CONTROLS** | | | | | | | | |
| **Burners** | | 2 | 2 | 3 | 3 | 3 | 3 | 4 |
| **Gas Connection Size** | | 1/2 in. NPT | | | | | | |
| **Gas Valve (Redundant)** | Mfr | WhiteRodgers™ | | | | | | |
| **Min. inlet pressure** | (in.w.c.) | 4.5 (Natural Gas) | | | | | | |
| **Max. inlet pressure** | (in.w.c.) | 13.6 (Natural Gas) | | | | | | |
| **Ignition Device** | | Silicon Nitride | | | | | | |
| **Factory installed orifice** | | Size 43 | | | | | | |
| **CONNECTIONS** | | | | | | | | |
| **Communication System** | | None | | | | | | |
| **Thermostat Connections** | | G, C, W, Y, R | | | | | | |
| **Accessory Connections** | | EAC-1 (115 VAC); HUM (24 VAC); 1-STG AC (via Y) | | | | | | |

*. Gas input ratings are certified for elevations to 2000 ft. (610 M). In USA, For elevations above 2000 ft (610 M), reduce ratings 4 percent for each 1000 ft (305 M) above sea level. Refer to National Fuel Gas Code NFPA 54/ANSI Z223.1 Table F.4 or furnace installation instructions.

†. Capacity in accordance with U.S. Government DOE test procedures.

‡. Airflow shown is for bottom only return-air supply for the as-shipped speed tap. For air delivery above 1800 CFM, see Air Delivery table for other options. A filter is required for each return-air supply. An airflow reduction of up to 7 percent may occur when using the factory-specified 4-5/16-in. (110 mm) wide, high efficiency media filter.

**. See Accessory List for part numbers available.

**Manufacturer reserves the right to change, at any time, specifications and designs without notice and without obligations.**

| UNIT SIZE | | 48090C | 60090C | 60110C | 60110D | 60135D | 60155D |
|---|---|---|---|---|---|---|---|
| **HEATING AND CAPACITY AND EFFICIENCY** | | | | | | | |
| **Input BTUh*** | All Standard<br>Low NOx - Upflow | 88,000 | 88,000 | 110,000 | 110,000 | 132,000 | 154,000 |
| | Low NOx - Dwnflw/Hz | 84,000 | 84,000 | 105,000 | 105,000 | 126,000 | 147,000 |
| **Output Capacity (BTUh)†** | All Standard<br>Low NOx - Upflow | 72,000 | 71,000 | 90,000 | 90,000 | 107,000 | 125,000 |
| | Low NOx - Dwnflw/Hz | 68,000 | 68,000 | 85,000 | 85,000 | 102,000 | 119,000 |
| **Certified Temperature Rise Range - °F (°C)** | | 35-65<br>(19-36) | 25-55<br>(14-31) | 30-60<br>(17-33) | 30-60<br>(17-33) | 40-70<br>(22-39) | 45-75<br>(25-42) |
| **AFUE†** | | 80% | | | | | |
| **AIRFLOW CAPACITY AND BLOWER DATA** | | | | | | | |
| **Rated Certified External Static Pressure** | Heating | .15 | .15 | .20 | .20 | .20 | .20 |
| | Cooling | .50 | .50 | .50 | .50 | .50 | .50 |
| **Airflow CFM @ Rated ESP (CFM)‡** | Heating | 1325 | 1645 | 1840 | 1970 | 1805 | 1945 |
| | Cooling | 315-1565 | 325-2315 | 420-2350 | 400-2005 | 290-1925 | 290-1985 |
| **Direct Drive Motor HP** | | 1/2 | 1 | 1 | 3/4 | 3/4 | 3/4 |
| **Motor Full Load Amps** | | 6.7 | 11.5 | 11.5 | 8.8 | 8.8 | 8.8 |
| **Heating Blower Control (Htg Off-Delay)** | | Adjustable: 90, 120 (factory-set), 150, 180 seconds | | | | | |
| **Cooling Blower Control (Clg OFF-Delay)** | | Adjustable: 90 (factory-set), 5, 30 seconds | | | | | |
| **Blower Wheel Diameter x Width - In. (mm)** | | 10x10<br>(254x254) | 11x11<br>(279x279) | 11x11<br>(279x279) | 11x11<br>(279x279) | 11x11<br>(279x279) | 11x11<br>(279x279) |
| **Air Filtration System** | | Field Supplied Filter | | | | | |
| **Filter used for Certified Watt Data** | | 325531-40** | | | | | |
| **ELECTRICAL DATA** | | | | | | | |
| **Unit Volts-Hertz-Phase** | | 115-60-1 | | | | | |
| **Operating Voltage Range** | Min-Max | 104-127 | | | | | |
| **Maximum Unit Amps** | | 8.2 | 13.9 | 14.4 | 11.1 | 11.0 | 10.7 |
| **Unit Ampacity** | | 11.0 | 18.1 | 18.6 | 14.6 | 14.4 | 14.1 |
| **Maximum Wire Length (Measure 1 way in Ft/M)** | | 34/10.3 | 31/9.6 | 30/9.4 | 25/7.7 | 25/7.8 | 26/8.0 |
| **Minimum Wire Size** | AWG | 14 | 12 | 12 | 14 | 14 | 14 |
| **Max. Fuse/Ckt Bkr Size (Time-Delay Type Recommended)** | Amps | 15 | 20 | 20 | 15 | 15 | 15 |
| **Transformer Capacity (24 VAC output)** | | 40VA | | | | | |
| **External Control Power Available** | Heating | 12VA | | | | | |
| | Cooling | 35VA | | | | | |
| **GAS CONTROLS** | | | | | | | |
| **Burners** | | 4 | 4 | 5 | 5 | 6 | 6 |
| **Gas Connection Size** | | 1/2 in. NPT | | | | | |
| **Gas Valve (Redundant)** | Mfr | WhiteRodgers™ | | | | | |
| **Min. inlet pressure** | (in.w.c.) | 4.5 (Natural Gas) | | | | | |
| **Max. inlet pressure** | (in.w.c.) | 13.6 (Natural Gas) | | | | | |
| **Ignition Device** | | Silicon Nitride | | | | | |
| **Factory installed orifice** | | Size 43 | | | | | |
| **CONNECTIONS** | | | | | | | |
| **Communication System** | | None | | | | | |
| **Thermostat Connections** | | G, C, W, Y, R | | | | | |
| **Accessory Connections** | | EAC-1 (115 VAC); HUM (24 VAC); 1-STG AC (via Y) | | | | | |

*. Gas input ratings are certified for elevations to 2000 ft. (610 M). In USA, For elevations above 2000 ft (610 M), reduce ratings 4 percent for each 1000 ft (305 M) above sea level. Refer to National Fuel Gas Code NFPA 54/ANSI Z223.1 Table F.4 or furnace installation instructions.

†. Capacity in accordance with U.S. Government DOE test procedures.

‡. Airflow shown is for bottom only return-air supply for the as-shipped speed tap. For air delivery above 1800 CFM, see Air Delivery table for other options. A filter is required for each return-air supply. An airflow reduction of up to 7 percent may occur when using the factory-specified 4-5/16-in. (110 mm) wide, high efficiency media filter.

**. See Accessory List for part numbers available.

**Manufacturer reserves the right to change, at any time, specifications and designs without notice and without obligations.**

# AIR DELIVERY (with filter)

**Air Delivery - CFM (with filter)***

| Unit Size | Airflow Setting | Default Setting | External Static Pressure (in. w.c.) | | | | | | | | | |
|---|---|---|---|---|---|---|---|---|---|---|---|---|
| | | | 0.1 | 0.2 | 0.3 | 0.4 | 0.5 | 0.6 | 0.7 | 0.8 | 0.9 | 1 |
| 36045A | 1 | Constant Fan | 455 | 385 | 320 | 250 | 175 | -- | -- | -- | -- | -- |
| | 2 | | 490 | 425 | 360 | 300 | 225 | 150 | -- | -- | -- | -- |
| | 3 | | 535 | 480 | 415 | 360 | 305 | 230 | 160 | -- | -- | -- |
| | 4 | | 565 | 510 | 450 | 395 | 345 | 285 | 215 | 135 | -- | -- |
| | 5 | | 605 | 555 | 500 | 445 | 390 | 345 | 285 | 215 | 145 | -- |
| | 6 | | 645 | 595 | 545 | 490 | 440 | 395 | 350 | 290 | 225 | 155 |
| | 7 | | 695 | 645 | 600 | 550 | 500 | 455 | 410 | 370 | 310 | 255 |
| | 8 | Heating | 715 | 670 | 625 | 575 | 530 | 485 | 440 | 400 | 355 | 290 |
| | 9 | | 770 | 730 | 685 | 640 | 595 | 555 | 510 | 470 | 430 | 390 |
| | 10 | | 825 | 780 | 740 | 700 | 660 | 615 | 575 | 535 | 500 | 460 |
| | 11 | | 870 | 830 | 795 | 755 | 720 | 680 | 640 | 600 | 560 | 525 |
| | 12 | | 920 | 880 | 845 | 810 | 775 | 735 | 700 | 660 | 625 | 590 |
| | 13 | | 965 | 930 | 895 | 855 | 825 | 790 | 755 | 720 | 685 | 650 |
| | 14 | | 1005 | 970 | 935 | 905 | 875 | 840 | 805 | 770 | 740 | 705 |
| | 15 | | 1055 | 1020 | 990 | 960 | 930 | 895 | 865 | 835 | 800 | 770 |
| | 16 | | 1105 | 1070 | 1040 | 1010 | 980 | 950 | 925 | 895 | 860 | 830 |
| | 17 | | 1125 | 1095 | 1065 | 1035 | 1005 | 975 | 950 | 920 | 890 | 860 |
| | 18 | Cooling | 1210 | 1180 | 1150 | 1120 | 1095 | 1065 | 1040 | 1010 | 980 | 945 |
| 42045B | 1 | Constant Fan | 495 | 425 | 345 | 270 | 210 | 135 | -- | -- | -- | -- |
| | 2 | | 540 | 475 | 400 | 330 | 270 | 205 | 135 | -- | -- | -- |
| | 3 | | 580 | 520 | 455 | 380 | 320 | 260 | 200 | 160 | -- | -- |
| | 4 | | 635 | 575 | 520 | 450 | 385 | 330 | 275 | 215 | 155 | -- |
| | 5 | | 685 | 630 | 570 | 515 | 450 | 390 | 340 | 290 | 235 | 180 |
| | 6 | Heating | 720 | 665 | 615 | 560 | 505 | 445 | 395 | 345 | 295 | 245 |
| | 7 | | 770 | 720 | 665 | 615 | 565 | 505 | 450 | 400 | 355 | 310 |
| | 8 | | 830 | 785 | 735 | 690 | 640 | 590 | 535 | 485 | 440 | 395 |
| | 9 | | 880 | 840 | 790 | 745 | 705 | 660 | 610 | 555 | 510 | 465 |
| | 10 | | 945 | 905 | 860 | 815 | 775 | 735 | 690 | 645 | 595 | 550 |
| | 11 | | 1005 | 965 | 920 | 880 | 840 | 800 | 760 | 725 | 680 | 630 |
| | 12 | | 1060 | 1025 | 985 | 940 | 905 | 865 | 825 | 790 | 750 | 710 |
| | 13 | | 1120 | 1085 | 1050 | 1010 | 970 | 935 | 900 | 865 | 830 | 795 |
| | 14 | | 1170 | 1135 | 1100 | 1065 | 1030 | 995 | 960 | 925 | 890 | 855 |
| | 15 | | 1235 | 1205 | 1170 | 1135 | 1100 | 1065 | 1035 | 1000 | 965 | 915 |
| | 16 | | 1295 | 1265 | 1235 | 1200 | 1170 | 1135 | 1105 | 1075 | 1020 | 930 |
| | 17 | | 1365 | 1335 | 1305 | 1270 | 1240 | 1210 | 1180 | 1125 | 1035 | 930 |
| | 18 | Cooling | 1460 | 1420 | 1375 | 1330 | 1285 | 1235 | 1190 | 1130 | 1035 | 930 |
| 36070A | 1 | Constant Fan | 465 | 400 | 330 | 250 | 180 | 115 | -- | -- | -- | -- |
| | 2 | | 500 | 440 | 370 | 295 | 225 | 165 | 115 | - | -- | -- |
| | 3 | | 550 | 490 | 430 | 365 | 300 | 235 | 175 | 130 | --- | -- |
| | 4 | | 595 | 540 | 485 | 425 | 355 | 295 | 240 | 185 | 135 | -- |
| | 5 | | 635 | 580 | 530 | 475 | 420 | 355 | 300 | 245 | 195 | 145 |
| | 6 | | 675 | 625 | 575 | 525 | 470 | 410 | 355 | 300 | 250 | 205 |
| | 7 | | 715 | 670 | 625 | 575 | 525 | 475 | 420 | 370 | 320 | 270 |
| | 8 | | 760 | 720 | 675 | 630 | 585 | 535 | 490 | 435 | 390 | 340 |
| | 9 | | 805 | 765 | 725 | 685 | 640 | 595 | 550 | 505 | 455 | 410 |
| | 10 | | 855 | 820 | 780 | 740 | 700 | 660 | 615 | 575 | 530 | 485 |
| | 11 | | 905 | 870 | 835 | 795 | 760 | 720 | 685 | 645 | 600 | 560 |
| | 12 | | 950 | 915 | 880 | 845 | 810 | 775 | 740 | 700 | 665 | 625 |
| | 13 | | 1005 | 970 | 940 | 905 | 870 | 840 | 805 | 770 | 735 | 700 |
| | 14 | | 1055 | 1020 | 990 | 960 | 930 | 895 | 865 | 830 | 800 | 765 |
| | 15 | Heating | 1085 | 1055 | 1025 | 995 | 965 | 935 | 900 | 870 | 840 | 810 |
| | 16 | | 1120 | 1090 | 1060 | 1030 | 1000 | 970 | 940 | 910 | 880 | 850 |
| | 17 | | 1150 | 1120 | 1095 | 1065 | 1035 | 1005 | 975 | 945 | 920 | 890 |
| | 18 | Cooling | 1220 | 1195 | 1170 | 1140 | 1115 | 1090 | 1060 | 1035 | 1005 | 970 |

**Manufacturer reserves the right to change, at any time, specifications and designs without notice and without obligations.**

**Air Delivery - CFM (with filter)* (Continued)**

| Unit Size | Airflow Setting | Default Setting | External Static Pressure (in. w.c.) | | | | | | | | | |
|---|---|---|---|---|---|---|---|---|---|---|---|---|
| | | | 0.1 | 0.2 | 0.3 | 0.4 | 0.5 | 0.6 | 0.7 | 0.8 | 0.9 | 1 |
| 36070B | 1 | Constant Fan | 475 | 385 | 300 | 220 | 155 | - | -- | -- | -- | -- |
| | 2 | | 515 | 430 | 350 | 275 | 200 | 130 | -- | -- | -- | -- |
| | 3 | | 565 | 490 | 410 | 340 | 270 | 205 | 140 | -- | -- | -- |
| | 4 | | 610 | 540 | 470 | 400 | 335 | 265 | 210 | 150 | -- | -- |
| | 5 | | 655 | 590 | 525 | 455 | 395 | 330 | 270 | 215 | 155 | -- |
| | 6 | | 700 | 635 | 570 | 505 | 445 | 385 | 325 | 270 | 220 | 165 |
| | 7 | | 740 | 685 | 620 | 560 | 500 | 445 | 390 | 335 | 280 | 235 |
| | 8 | | 790 | 735 | 675 | 620 | 565 | 510 | 455 | 400 | 350 | 300 |
| | 9 | | 835 | 785 | 730 | 675 | 620 | 570 | 515 | 465 | 415 | 365 |
| | 10 | | 880 | 830 | 780 | 725 | 675 | 625 | 575 | 525 | 480 | 430 |
| | 11 | | 935 | 890 | 840 | 790 | 740 | 690 | 645 | 595 | 550 | 505 |
| | 12 | | 985 | 940 | 895 | 845 | 800 | 750 | 705 | 665 | 620 | 575 |
| | 13 | | 1035 | 990 | 950 | 900 | 855 | 810 | 770 | 730 | 685 | 640 |
| | 14 | | 1080 | 1040 | 995 | 950 | 910 | 865 | 825 | 785 | 745 | 705 |
| | 15 | Heating | 1120 | 1075 | 1035 | 995 | 950 | 910 | 870 | 830 | 790 | 750 |
| | 16 | | 1175 | 1140 | 1100 | 1060 | 1020 | 980 | 940 | 905 | 865 | 830 |
| | 17 | | 1225 | 1190 | 1155 | 1115 | 1080 | 1040 | 1000 | 965 | 930 | 895 |
| | 18 | Cooling | 1300 | 1265 | 1230 | 1190 | 1160 | 1120 | 1085 | 1050 | 1015 | 980 |
| 48070B | 1 | Constant Fan | 545 | 465 | 385 | 310 | 235 | 155 | -- | -- | -- | -- |
| | 2 | | 605 | 535 | 455 | 385 | 315 | 250 | 175 | - | -- | -- |
| | 3 | | 665 | 595 | 530 | 460 | 395 | 330 | 270 | 205 | -- | -- |
| | 4 | | 740 | 675 | 615 | 550 | 490 | 430 | 370 | 315 | 255 | 190 |
| | 5 | | 810 | 750 | 690 | 635 | 570 | 515 | 460 | 405 | 355 | 305 |
| | 6 | | 870 | 815 | 760 | 705 | 650 | 595 | 545 | 490 | 440 | 390 |
| | 7 | | 955 | 900 | 850 | 795 | 745 | 695 | 645 | 595 | 545 | 495 |
| | 8 | | 1025 | 975 | 925 | 880 | 835 | 785 | 735 | 685 | 645 | 595 |
| | 9 | | 1095 | 1050 | 1005 | 955 | 915 | 870 | 820 | 770 | 730 | 685 |
| | 10 | | 1175 | 1135 | 1090 | 1045 | 1005 | 960 | 920 | 875 | 830 | 790 |
| | 11 | | 1220 | 1180 | 1135 | 1095 | 1055 | 1015 | 975 | 935 | 890 | 850 |
| | 12 | Heating | 1320 | 1285 | 1245 | 1205 | 1170 | 1130 | 1095 | 1055 | 1015 | 980 |
| | 13 | | 1390 | 1355 | 1315 | 1280 | 1245 | 1210 | 1170 | 1135 | 1100 | 1065 |
| | 14 | | 1475 | 1435 | 1405 | 1370 | 1335 | 1300 | 1265 | 1235 | 1200 | 1165 |
| | 15 | | 1550 | 1520 | 1485 | 1450 | 1415 | 1385 | 1350 | 1320 | 1290 | 1260 |
| | 16 | | 1630 | 1600 | 1570 | 1540 | 1510 | 1480 | 1450 | 1420 | 1390 | 1365 |
| | 17 | | 1705 | 1675 | 1640 | 1615 | 1590 | 1560 | 1535 | 1505 | 1480 | 1455 |
| | 18 | Cooling | 1840 | 1810 | 1775 | 1735 | 1700 | 1660 | 1620 | 1580 | 1540 | 1500 |
| 48070C | 1 | Constant Fan | 590 | 495 | 390 | 290 | 210 | 120 | -- | -- | -- | -- |
| | 2 | | 665 | 580 | 485 | 390 | 300 | 225 | 145 | - | -- | -- |
| | 3 | | 730 | 655 | 565 | 480 | 385 | 310 | 245 | 170 | -- | -- |
| | 4 | | 820 | 750 | 675 | 595 | 520 | 435 | 360 | 300 | 235 | 165 |
| | 5 | | 875 | 810 | 740 | 665 | 595 | 515 | 435 | 370 | 315 | 250 |
| | 6 | | 950 | 885 | 830 | 760 | 695 | 625 | 550 | 480 | 410 | 360 |
| | 7 | | 1045 | 985 | 930 | 875 | 810 | 750 | 685 | 620 | 555 | 490 |
| | 8 | | 1140 | 1085 | 1030 | 980 | 925 | 865 | 810 | 750 | 695 | 635 |
| | 9 | | 1200 | 1145 | 1095 | 1050 | 1000 | 945 | 885 | 835 | 780 | 730 |
| | 10 | Heating | 1300 | 1250 | 1195 | 1155 | 1110 | 1065 | 1015 | 960 | 910 | 865 |
| | 11 | | 1370 | 1320 | 1275 | 1230 | 1190 | 1150 | 1105 | 1055 | 1005 | 960 |
| | 12 | | 1455 | 1410 | 1365 | 1325 | 1285 | 1245 | 1205 | 1165 | 1115 | 1070 |
| | 13 | | 1535 | 1490 | 1450 | 1415 | 1375 | 1340 | 1305 | 1265 | 1225 | 1185 |
| | 14 | | 1615 | 1575 | 1535 | 1495 | 1460 | 1425 | 1390 | 1355 | 1320 | 1285 |
| | 15 | | 1705 | 1670 | 1635 | 1600 | 1565 | 1535 | 1505 | 1470 | 1435 | 1400 |
| | 16 | | 1775 | 1745 | 1710 | 1680 | 1650 | 1620 | 1590 | 1560 | 1530 | 1505 |
| | 17 | | 1870 | 1840 | 1810 | 1780 | 1750 | 1725 | 1705 | 1670 | 1630 | 1530 |
| | 18 | Cooling | 2025 | 1975 | 1925 | 1875 | 1820 | 1770 | 1725 | 1680 | 1630 | 1535 |

**Manufacturer reserves the right to change, at any time, specifications and designs without notice and without obligations.**

**Air Delivery - CFM (with filter)* (Continued)**

| Unit Size | Airflow Setting | Default Setting | External Static Pressure (in. w.c.) | | | | | | | | | |
|---|---|---|---|---|---|---|---|---|---|---|---|---|
| | | | 0.1 | 0.2 | 0.3 | 0.4 | 0.5 | 0.6 | 0.7 | 0.8 | 0.9 | 1 |
| 42090B | 1 | Constant Fan | 670 | 595 | 485 | 405 | 330 | 245 | 190 | 130 | -- | -- |
| | 2 | | 705 | 635 | 535 | 450 | 380 | 305 | 235 | 180 | 125 | -- |
| | 3 | | 760 | 695 | 625 | 520 | 450 | 380 | 310 | 245 | 195 | 145 |
| | 4 | | 810 | 750 | 685 | 585 | 515 | 450 | 385 | 320 | 260 | 210 |
| | 5 | | 860 | 800 | 745 | 675 | 580 | 510 | 450 | 390 | 325 | 270 |
| | 6 | | 910 | 855 | 800 | 740 | 650 | 580 | 515 | 460 | 400 | 345 |
| | 7 | | 950 | 900 | 850 | 790 | 730 | 640 | 575 | 515 | 465 | 410 |
| | 8 | | 1025 | 975 | 925 | 875 | 820 | 740 | 670 | 615 | 560 | 510 |
| | 9 | | 1075 | 1030 | 985 | 935 | 885 | 835 | 745 | 690 | 630 | 580 |
| | 10 | | 1140 | 1095 | 1050 | 1005 | 960 | 910 | 855 | 775 | 715 | 665 |
| | 11 | | 1210 | 1165 | 1125 | 1085 | 1040 | 995 | 950 | 895 | 815 | 760 |
| | 12 | Heating | 1255 | 1210 | 1170 | 1130 | 1085 | 1045 | 1000 | 955 | 880 | 820 |
| | 13 | | 1280 | 1235 | 1200 | 1160 | 1115 | 1075 | 1030 | 990 | 925 | 855 |
| | 14 | | 1340 | 1300 | 1265 | 1225 | 1185 | 1145 | 1105 | 1065 | 1025 | 965 |
| | 15 | | 1410 | 1370 | 1335 | 1300 | 1265 | 1225 | 1190 | 1150 | 1110 | 1070 |
| | 16 | | 1475 | 1440 | 1405 | 1370 | 1335 | 1300 | 1265 | 1225 | 1190 | 1150 |
| | 17 | | 1550 | 1515 | 1480 | 1445 | 1415 | 1380 | 1345 | 1310 | 1270 | 1235 |
| | 18 | Cooling | 1620 | 1585 | 1555 | 1520 | 1490 | 1460 | 1425 | 1375 | 1315 | 1255 |
| 48090C | 1 | Constant Fan | 685 | 585 | 490 | 395 | 315 | 240 | 170 | -- | -- | -- |
| | 2 | | 745 | 660 | 560 | 480 | 390 | 320 | 250 | 185 | -- | -- |
| | 3 | | 810 | 725 | 635 | 550 | 475 | 395 | 325 | 265 | 200 | -- |
| | 4 | | 860 | 785 | 700 | 615 | 540 | 465 | 395 | 335 | 275 | 215 |
| | 5 | | 915 | 845 | 765 | 680 | 610 | 535 | 465 | 400 | 345 | 285 |
| | 6 | | 980 | 910 | 840 | 765 | 690 | 620 | 555 | 490 | 425 | 370 |
| | 7 | | 1040 | 980 | 910 | 840 | 770 | 700 | 635 | 575 | 510 | 450 |
| | 8 | | 1100 | 1040 | 975 | 910 | 840 | 770 | 710 | 650 | 590 | 530 |
| | 9 | | 1170 | 1110 | 1055 | 995 | 930 | 870 | 800 | 745 | 685 | 630 |
| | 10 | | 1225 | 1170 | 1110 | 1055 | 995 | 930 | 865 | 810 | 755 | 700 |
| | 11 | | 1295 | 1245 | 1195 | 1135 | 1085 | 1025 | 970 | 905 | 850 | 795 |
| | 12 | | 1315 | 1265 | 1215 | 1160 | 1110 | 1055 | 1000 | 935 | 880 | 830 |
| | 13 | Heating | 1350 | 1300 | 1250 | 1195 | 1145 | 1090 | 1035 | 975 | 915 | 865 |
| | 14 | | 1420 | 1375 | 1330 | 1280 | 1230 | 1185 | 1130 | 1075 | 1020 | 960 |
| | 15 | | 1495 | 1455 | 1405 | 1360 | 1315 | 1270 | 1220 | 1170 | 1120 | 1060 |
| | 16 | | 1565 | 1525 | 1480 | 1435 | 1395 | 1350 | 1305 | 1260 | 1210 | 1160 |
| | 17 | | 1645 | 1605 | 1565 | 1525 | 1480 | 1435 | 1390 | 1345 | 1300 | 1250 |
| | 18 | Cooling | 1725 | 1680 | 1645 | 1605 | 1565 | 1520 | 1480 | 1420 | 1340 | 1260 |
| 60090C | 1 | Constant Fan | 770 | 655 | 540 | 430 | 325 | 195 | -- | -- | -- | -- |
| | 2 | | 850 | 745 | 640 | 535 | 435 | 340 | 210 | - | -- | -- |
| | 3 | | 925 | 825 | 725 | 625 | 530 | 435 | 345 | 230 | -- | -- |
| | 4 | | 1030 | 940 | 845 | 755 | 665 | 575 | 490 | 405 | 315 | 185 |
| | 5 | | 1120 | 1040 | 950 | 865 | 780 | 700 | 615 | 540 | 455 | 380 |
| | 6 | | 1210 | 1130 | 1050 | 970 | 895 | 810 | 735 | 655 | 580 | 510 |
| | 7 | | 1285 | 1215 | 1140 | 1065 | 990 | 915 | 840 | 765 | 690 | 620 |
| | 8 | | 1385 | 1320 | 1250 | 1180 | 1110 | 1040 | 975 | 900 | 835 | 765 |
| | 9 | | 1480 | 1415 | 1355 | 1290 | 1215 | 1155 | 1090 | 1025 | 960 | 895 |
| | 10 | | 1570 | 1510 | 1450 | 1390 | 1325 | 1260 | 1200 | 1140 | 1080 | 1015 |
| | 11 | Heating | 1675 | 1615 | 1560 | 1505 | 1450 | 1390 | 1330 | 1270 | 1210 | 1155 |
| | 12 | | 1775 | 1720 | 1670 | 1615 | 1560 | 1510 | 1450 | 1395 | 1340 | 1285 |
| | 13 | | 1865 | 1815 | 1765 | 1715 | 1660 | 1610 | 1555 | 1500 | 1450 | 1395 |
| | 14 | | 1965 | 1920 | 1875 | 1825 | 1780 | 1730 | 1680 | 1630 | 1580 | 1535 |
| | 15 | | 2075 | 2030 | 1985 | 1940 | 1895 | 1845 | 1805 | 1760 | 1710 | 1660 |
| | 16 | | 2170 | 2135 | 2090 | 2050 | 2005 | 1965 | 1925 | 1880 | 1835 | 1790 |
| | 17 | Cooling | 2270 | 2225 | 2190 | 2150 | 2115 | 2075 | 2035 | 2000 | 1960 | 1920 |
| | 18 | | 2485 | 2445 | 2410 | 2365 | 2315 | 2265 | 2215 | 2160 | 2105 | 2050 |

**Manufacturer reserves the right to change, at any time, specifications and designs without notice and without obligations.**

**Air Delivery - CFM (with filter)* (Continued)**

| Unit Size | Airflow Setting | Default Setting | External Static Pressure (in. w.c.) | | | | | | | | | |
|---|---|---|---|---|---|---|---|---|---|---|---|---|
| | | | 0.1 | 0.2 | 0.3 | 0.4 | 0.5 | 0.6 | 0.7 | 0.8 | 0.9 | 1 |
| 60110C | 1 | Constant Fan | 845 | 730 | 625 | 520 | 420 | 330 | 240 | 135 | -- | -- |
| | 2 | | 920 | 810 | 705 | 610 | 515 | 425 | 345 | 260 | 155 | -- |
| | 3 | | 1025 | 920 | 825 | 735 | 645 | 560 | 475 | 400 | 320 | 245 |
| | 4 | | 1115 | 1015 | 930 | 840 | 760 | 675 | 595 | 520 | 445 | 380 |
| | 5 | | 1235 | 1150 | 1060 | 980 | 900 | 825 | 750 | 675 | 600 | 525 |
| | 6 | | 1340 | 1260 | 1180 | 1100 | 1025 | 955 | 885 | 810 | 740 | 675 |
| | 7 | | 1440 | 1365 | 1290 | 1215 | 1140 | 1070 | 1005 | 940 | 875 | 805 |
| | 8 | | 1530 | 1460 | 1390 | 1320 | 1250 | 1185 | 1115 | 1055 | 995 | 930 |
| | 9 | | 1640 | 1575 | 1510 | 1440 | 1375 | 1310 | 1250 | 1190 | 1130 | 1075 |
| | 10 | | 1745 | 1685 | 1620 | 1555 | 1495 | 1430 | 1370 | 1315 | 1260 | 1205 |
| | 11 | | 1835 | 1780 | 1720 | 1665 | 1605 | 1550 | 1490 | 1435 | 1380 | 1330 |
| | 12 | Heating | 1895 | 1840 | 1785 | 1730 | 1675 | 1615 | 1560 | 1505 | 1455 | 1400 |
| | 13 | | 1950 | 1895 | 1840 | 1785 | 1725 | 1670 | 1615 | 1565 | 1510 | 1460 |
| | 14 | | 2055 | 2005 | 1955 | 1900 | 1845 | 1790 | 1740 | 1690 | 1640 | 1590 |
| | 15 | | 2160 | 2110 | 2065 | 2015 | 1960 | 1910 | 1860 | 1815 | 1765 | 1720 |
| | 16 | Cooling | 2260 | 2210 | 2165 | 2120 | 2070 | 2020 | 1975 | 1930 | 1885 | 1840 |
| | 17 | | 2355 | 2310 | 2265 | 2225 | 2180 | 2135 | 2090 | 2045 | 2005 | 1960 |
| | 18 | | 2520 | 2480 | 2435 | 2395 | 2350 | 2310 | 2255 | 2195 | 2135 | 2080 |
| 60110D | 1 | Constant Fan | 840 | 725 | 615 | 505 | 400 | 310 | 215 | 135 | -- | -- |
| | 2 | | 930 | 825 | 720 | 620 | 520 | 420 | 335 | 250 | 165 | -- |
| | 3 | | 1015 | 915 | 815 | 725 | 630 | 530 | 440 | 360 | 280 | 205 |
| | 4 | | 1095 | 995 | 905 | 815 | 725 | 635 | 540 | 460 | 385 | 310 |
| | 5 | | 1185 | 1090 | 1005 | 915 | 835 | 750 | 665 | 580 | 500 | 430 |
| | 6 | | 1250 | 1160 | 1080 | 1000 | 915 | 840 | 755 | 675 | 595 | 525 |
| | 7 | | 1335 | 1255 | 1175 | 1100 | 1020 | 940 | 870 | 790 | 710 | 635 |
| | 8 | | 1435 | 1355 | 1280 | 1210 | 1140 | 1060 | 990 | 920 | 845 | 780 |
| | 9 | | 1510 | 1435 | 1360 | 1290 | 1225 | 1155 | 1085 | 1015 | 950 | 880 |
| | 10 | | 1600 | 1530 | 1455 | 1390 | 1325 | 1260 | 1190 | 1125 | 1060 | 995 |
| | 11 | | 1685 | 1615 | 1545 | 1480 | 1420 | 1360 | 1295 | 1230 | 1165 | 1110 |
| | 12 | | 1760 | 1695 | 1630 | 1565 | 1505 | 1450 | 1390 | 1330 | 1270 | 1210 |
| | 13 | | 1855 | 1795 | 1730 | 1670 | 1610 | 1560 | 1505 | 1445 | 1385 | 1330 |
| | 14 | | 1945 | 1885 | 1830 | 1770 | 1710 | 1655 | 1605 | 1555 | 1495 | 1445 |
| | 15 | Heating | 2025 | 1970 | 1915 | 1855 | 1800 | 1750 | 1700 | 1650 | 1600 | 1550 |
| | 16 | | 2055 | 2000 | 1945 | 1890 | 1835 | 1785 | 1735 | 1685 | 1635 | 1585 |
| | 17 | | 2125 | 2070 | 2015 | 1965 | 1910 | 1860 | 1815 | 1765 | 1720 | 1670 |
| | 18 | Cooling | 2220 | 2170 | 2115 | 2060 | 2005 | 1960 | 1905 | 1860 | 1810 | 1750 |
| 60135D | 1 | Constant Fan | 760 | 635 | 520 | 405 | 290 | 175 | -- | -- | -- | -- |
| | 2 | | 815 | 700 | 590 | 485 | 370 | 270 | 155 | -- | -- | -- |
| | 3 | | 905 | 795 | 685 | 590 | 490 | 380 | 290 | 185 | -- | -- |
| | 4 | | 975 | 870 | 770 | 680 | 590 | 490 | 395 | 310 | 205 | -- |
| | 5 | | 1025 | 920 | 825 | 740 | 655 | 560 | 460 | 375 | 290 | 195 |
| | 6 | | 1120 | 1025 | 935 | 845 | 770 | 690 | 600 | 505 | 420 | 350 |
| | 7 | | 1205 | 1120 | 1030 | 945 | 870 | 800 | 720 | 635 | 550 | 470 |
| | 8 | | 1285 | 1200 | 1120 | 1040 | 965 | 900 | 830 | 750 | 675 | 590 |
| | 9 | | 1380 | 1305 | 1225 | 1150 | 1075 | 1010 | 950 | 885 | 815 | 735 |
| | 10 | | 1450 | 1380 | 1305 | 1230 | 1160 | 1095 | 1030 | 975 | 910 | 840 |
| | 11 | | 1555 | 1480 | 1415 | 1345 | 1275 | 1210 | 1150 | 1095 | 1045 | 985 |
| | 12 | | 1635 | 1565 | 1500 | 1435 | 1370 | 1310 | 1245 | 1190 | 1140 | 1090 |
| | 13 | | 1710 | 1645 | 1585 | 1525 | 1460 | 1400 | 1340 | 1285 | 1230 | 1185 |
| | 14 | | 1785 | 1725 | 1665 | 1600 | 1545 | 1485 | 1425 | 1375 | 1320 | 1275 |
| | 15 | Heating | 1870 | 1805 | 1750 | 1695 | 1640 | 1580 | 1525 | 1475 | 1420 | 1375 |
| | 16 | | 1940 | 1885 | 1830 | 1780 | 1725 | 1675 | 1620 | 1570 | 1520 | 1475 |
| | 17 | | 2020 | 1965 | 1915 | 1865 | 1815 | 1765 | 1715 | 1665 | 1620 | 1580 |
| | 18 | Cooling | 2125 | 2075 | 2025 | 1975 | 1925 | 1875 | 1825 | 1775 | 1705 | 1640 |

**Air Delivery - CFM (with filter)* (Continued)**

| Unit Size | Airflow Setting | Default Setting | External Static Pressure (in. w.c.) | | | | | | | | | |
|---|---|---|---|---|---|---|---|---|---|---|---|---|
| | | | 0.1 | 0.2 | 0.3 | 0.4 | 0.5 | 0.6 | 0.7 | 0.8 | 0.9 | 1 |
| 60155D | 1 | Constant Fan | 765 | 645 | 520 | 395 | 290 | 185 | -- | -- | -- | -- |
| | 2 | | 860 | 750 | 635 | 520 | 410 | 315 | 220 | 145 | -- | -- |
| | 3 | | 915 | 810 | 705 | 600 | 485 | 385 | 300 | 210 | 135 | -- |
| | 4 | | 1000 | 895 | 795 | 695 | 595 | 490 | 400 | 320 | 230 | 145 |
| | 5 | | 1075 | 975 | 880 | 790 | 695 | 595 | 500 | 420 | 335 | 260 |
| | 6 | | 1170 | 1075 | 985 | 900 | 815 | 730 | 635 | 545 | 470 | 390 |
| | 7 | | 1260 | 1170 | 1090 | 1010 | 930 | 845 | 765 | 675 | 590 | 510 |
| | 8 | | 1340 | 1255 | 1180 | 1100 | 1025 | 950 | 870 | 795 | 710 | 625 |
| | 9 | | 1415 | 1340 | 1260 | 1190 | 1120 | 1045 | 970 | 895 | 815 | 745 |
| | 10 | | 1505 | 1430 | 1355 | 1290 | 1220 | 1150 | 1080 | 1010 | 945 | 870 |
| | 11 | | 1575 | 1500 | 1430 | 1365 | 1295 | 1230 | 1165 | 1100 | 1030 | 970 |
| | 12 | | 1660 | 1590 | 1520 | 1455 | 1395 | 1335 | 1275 | 1210 | 1140 | 1085 |
| | 13 | | 1735 | 1670 | 1605 | 1545 | 1485 | 1425 | 1365 | 1310 | 1250 | 1185 |
| | 14 | | 1825 | 1760 | 1700 | 1640 | 1585 | 1530 | 1475 | 1425 | 1365 | 1310 |
| | 15 | | 1920 | 1860 | 1800 | 1740 | 1685 | 1630 | 1580 | 1530 | 1475 | 1420 |
| | 16 | Heating | 2000 | 1945 | 1890 | 1825 | 1775 | 1725 | 1675 | 1625 | 1575 | 1525 |
| | 17 | | 2085 | 2035 | 1980 | 1925 | 1870 | 1825 | 1780 | 1740 | 1695 | 1650 |
| | 18 | Cooling | 2205 | 2150 | 2095 | 2040 | 1985 | 1935 | 1885 | 1835 | 1775 | 1720 |

**NOTE:**

1. A filter is required for each return-air inlet. Airflow performance included 3/4-in. (19 mm) washable filter media such as contained in a factory - authorized accessory filter rack. See accessory list. To determine airflow performance without this filter, assume an additional 0.1 in. w.c. available external static pressure.
2. **Adjust the blower airflow setting as necessary for the proper air temperature rise for each installation.**
3. Airflows over 1800 CFM require bottom return, two-side return, or bottom and side return. A minimum filter size of 20" x 25" (508 x 635 mm) is required.
4. For upflow applications, air entering from one side into both the side of the furnace and a return air base counts as a side and bottom return.
5. The -- entry indicates unstable operating conditions.

**Airflow Settings**

| | Default Airflow Settings* | | Designated Airflow Settings | |
|---|---|---|---|---|
| Unit Size | Heating | Cooling | Heating | Constant Fan |
| 36045A | 8 | 18 | (4-12) | (1-7) |
| 42045B | 6 | 18 | (4-12) | (1-7) |
| 36070A | 15 | 18 | (9-16) | (1-7) |
| 36070B | 15 | 18 | (11-17) | (1-8) |
| 48070B | 12 | 18 | (7-13) | (1-4) |
| 48070C | 10 | 18 | (6-14) | (1-8) |
| 42090B | 12 | 18 | (7-16) | (1-9) |
| 48090C | 13 | 18 | (8-16) | (1-6) |
| 60090C | 11 | 17 | (7-14) | (1-9) |
| 60110C | 12 | 16 | (8-15) | (1-9) |
| 60110D | 15 | 18 | (9-17) | (1-6) |
| 60135D | 15 | 18 | (12-16) | (1-7) |

*. Setting #1 is the default setting for Constant Fan

## TYPICAL WIRING SCHEMATIC

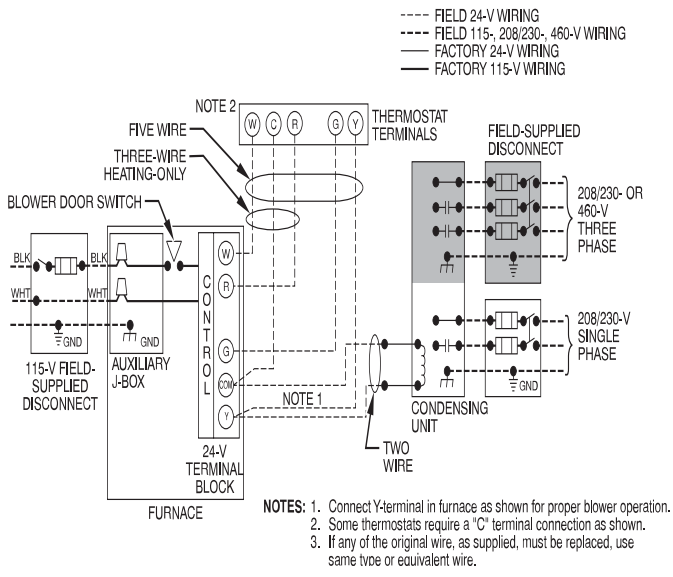


A190079

## FURNACE CONTROL BOARD

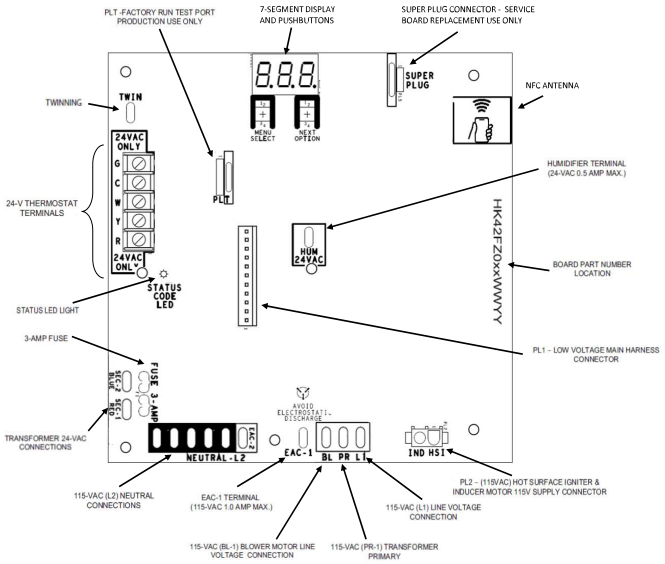


A210192

## VENTING CONFIGURATIONS

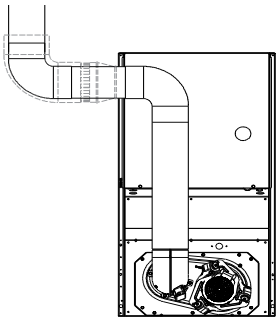


A03210

Downflow Application-Vent Elbow Up then Left

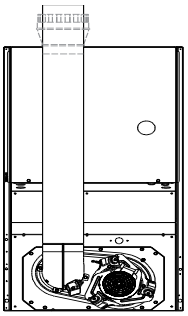


A03211

Downflow Application-Vent Elbow Up

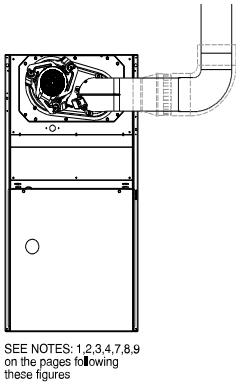


A03209

Upflow Application-Vent Elbow Right

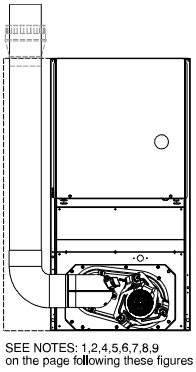


A03207

Downflow Application-Vent Elbow Left then Up

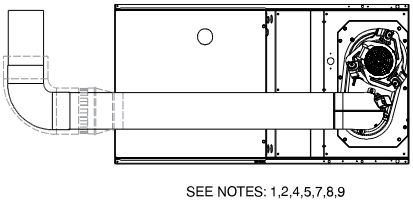


A02068

Horizontal Right Application-Vent Elbow Left

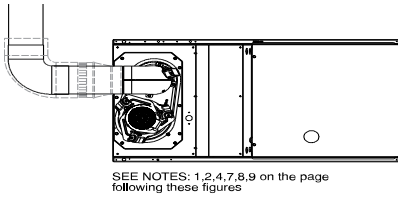


A03213

Horizontal Left Application-Vent Elbow Left

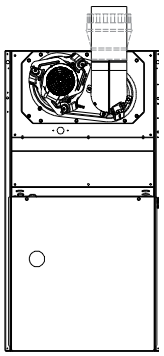

SEE NOTES: 1,2,4,7,8,9 on the page following these figures

A03208

Upflow Application-Vent Elbow Up

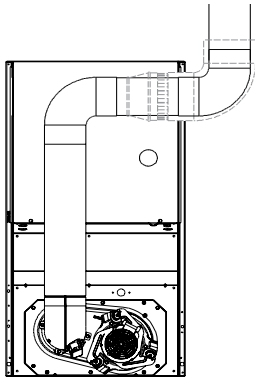

SEE NOTES:1,2,3,4,5,7,8,9 on the page following these figures.

A03212

Downflow Application-Vent Elbow Up then Right

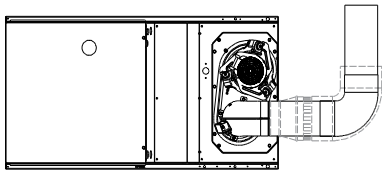

SEE NOTES: 1,2,4,7,8,9 on the page following these figures

A03218

Horizontal Right Application-Vent Elbow Right

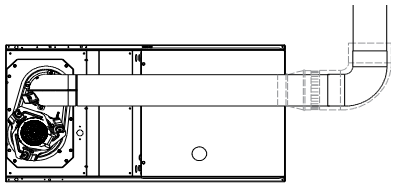

SEE NOTES: 1,2,4,5,7,8,9 on the page following these figures

A03216

Horizontal Left Application-Vent Elbow Right

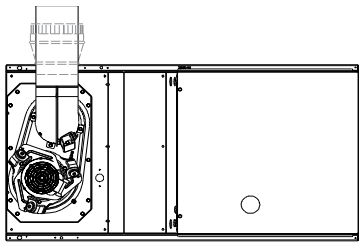

SEE NOTES: 1,2,4,5,7,8,9 on the page following these figures

A03215

Horizontal Left Application-Vent Elbow Up

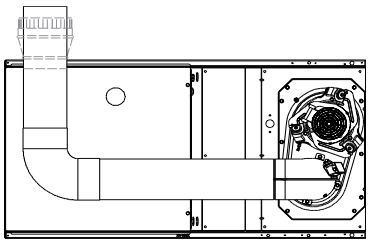

SEE NOTES: 1,2,4,5,7,8,9 on the page following these figures

A03219

Horizontal Right Application-Vent Elbow Left then Up

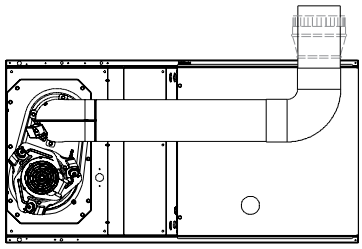

SEE NOTES: 1,2,4,5,7,8,9 on the page following these figures

A03214

Horizontal Left Application-Vent Elbow Right then Up

## Venting notes:

1. For common vent, vent connector sizing and vent material: United States, latest edition of the National Fuel Gas Code (NFGC), ANSI Z223.1/NFPA 54.
2. Immediately increase to 5-in. (127 mm) vent connector outside furnace casing when 5-in. (127 mm) vent connector required, refer to Note 1.
3. Side outlet vent for upflow and downflow installations must use Type B vent immediately after exiting the furnace, except when Downflow Vent Guard is used in downflow position.
4. Type B vent where required, refer to Note 1.
5. 4-in. (102 mm) single wall vent must be used inside furnace casing and the Downflow Vent Guard Kit.
6. Accessory Downflow Vent Guard Kit required in downflow installations with bottom vent configuration.
7. Chimney Adapter Kit required for exterior masonry chimney applications. Refer to Chimney Adapter Kits for sizing and complete application details.
8. Secure vent connector to furnace elbow with (2) corrosion-resistant sheet metal screws, space approximately 180 apart.
9. Secure all other single wall vent connector joints with (3) corrosion-resistant screws spaced approximately 120 apart. Secure Type B vent connectors per vent connector manufacturer’s recommendations.

# ACCESSORIES

| PART NO. | DESCRIPTION | 36045A | 36045B | 36070A | 36070A | 48070B | 48070C | 42090B |
|---|---|---|---|---|---|---|---|---|
| ACG1425NCB* | External Filter Rack, 14-1/2 x 25” | X | - | X | - | - | - | - |
| ACG1625NCF* | External Filter Rack, 16 x 25” | - | X | - | X | X | - | X |
| ACG2025NCJ* | External Filter Rack, 20 x 25” | - | - | - | - | - | X | - |
| 325531-402* | Washable filter, 3/4” x 16” x 25” | X | X | X | X | X | - | X |
| 325531-403* | Washable filter, 3/4” x 21” x 25” | - | - | - | - | - | X | - |
| KGADA0101ALL | Coil Adapter Kits - No Offset | X | X | X | X | X | X | X |
| KGADA0201ALL | Coil Adapter Kits - Single Offset | X | X | X | X | X | X | X |
| KGADA0301ALL | Coil Adapter Kits - Double Offset | X | X | X | X | X | X | X |
| KGARP0301B14 | Return Air Base (Upflow Applications) 14-3/16” wide | X | - | X | - | - | - | - |
| KGARP0301B17 | Return Air Base (Upflow Applications) 17-1/2” wide | - | X | - | X | X | - | X |
| KGARP0301B21 | Return Air Base (Upflow Applications) 21” wide | - | - | - | - | - | X | - |
| KGACA02014FC | Chimney Adapter Kit, up to or equal to 110K BTUh | X | X | X | X | X | X | X |
| KGAFE0112UPH | Flue Extension | X | X | X | X | X | X | X |
| KGAVE0101DNH | Vent Extension Kit | X | X | X | X | X | X | X |
| KGASB0201ALL | Combustible Floor Base (Not required when evaporator coil case is used for downflow) | X | X | X | X | X | X | X |
| KGBVG0101DFG | Downflow Vent Guard (Not required when vent is routed through cabinet) | X | X | X | X | X | X | X |
| AGAGC8NPS01B* | Natural-to-Propane Conversion Kit† | X | X | X | X | X | X | X |
| AGAGC8PNS01B* | Propane-to-Natural Conversion Kit† | X | X | X | X | X | X | X |
| AGATWNDTE01B | Twinning Kit FCT-ECM Motor | - | - | - | - | - | X | - |

*. Purchased through Replacement Components
†. Factory-authorized and field installed. Fuel conversion kits are CSA recognized.
X = Accessory

# ACCESSORIES (Continued)

| PART NO. | DESCRIPTION | 48090C | 60090C | 60110C | 60110D | 60135D | 60155D |
|---|---|---|---|---|---|---|---|
| ACG2025NCJ* | External Filter Rack 20 x 25” | X | X | X | - | - | - |
| ACG2424NCL* | External Filter Rack 24-1/2 x 24” | - | - | - | X | X | X |
| 325531-403* | Washable filter 3/4” x 21” x 25” | X | X | X | - | - | - |
| 325531-404* | Washable filter 3/4” x 24” x 25”* | - | - | - | X | X | X |
| KGADA0101ALL | Coil Adapter Kits - No Offset | X | X | X | X | X | X |
| KGADA0201ALL | Coil Adapter Kits - Single Offset | X | X | X | X | X | X |
| KGADA0301ALL | Coil Adapter Kits - Double Offset | X | X | X | X | X | X |
| KGARP0301B21 | Return Air Base (Upflow Applications) 21” wide | X | X | X | - | - | - |
| KGARP0301B24 | Return Air Base (Upflow Applications) 24-1/2 wide | - | - | - | X | X | X |
| KGACA02014FC | Chimney Adapter Kit, up to or equal to 110K BTUh | X | X | X | X | - | - |
| KGACA02015FC | Chimney Adapter Kit, greater than or equal to 135K BTUh | - | - | - | - | X | X |
| KGAFE0112UPH | Flue Extension | X | X | X | X | X | X |
| KGAVE0101DNH | Vent Extension Kit | X | X | X | X | X | X |
| KGASB0201ALL | Combustible Floor Base (Not required when evaporator coil case is used for down-flow) | X | X | X | X | X | X |
| KGBVG0101DFG | Downflow Vent Guard (Not required when vent is routed through cabinet) | X | X | X | X | X | X |
| AGAGC8NPS01B* | Natural-to-Propane Conversion Kit† | X | X | X | X | X | X |
| AGAGC8PNS01B* | Propane-to-Natural Conversion Kit† | X | X | X | X | X | X |
| AGATWNDTE01B | Twinning Kit FCT-ECM Motor | X | X | X | X | X | X |

*. Purchased through Replacement Components
†. Factory-authorized and field installed. Fuel conversion kits are CSA recognized.
X = Accessory

| ORFICIES | | |
|---|---|---|
| Gas Orifice Kit - #42 (Nat Gas) | LH32DB207 | See Installation Instructions for model, altitude, and heat value usages. |
| Gas Orifice Kit - #43 (Nat Gas) | LH32DB202 | |
| Gas Orifice Kit - #44 (Nat Gas) | LH32DB200 | |
| Gas Orifice Kit - #45 (Nat Gas) | LH32DB205 | |
| Gas Orifice Kit - #46 (Nat Gas) | LH32DB208 | |
| Gas Orifice Kit - #47 (Nat Gas) | LH32DB078 | |
| Gas Orifice Kit - #48 (Nat Gas) | LH32DB076 | |
| Gas Orifice Kit - #54 (LP) | LH32DB203 | |
| Gas Orifice Kit - #55 (LP) | LH32DB201 | |
| Gas Orifice Kit - #56 (LP) | LH32DB206 | |
| Gas Orifice Kit - 1.25mm (LP) | LH32DB209 | |
| Gas Orifice Kit - 1.30mm (LP) | LH32DB210 | |

| DESCRIPTION | ACCESSORY |
|---|---|
| HUMIDIFIER | Model HUM |
| HEAT RECOVERY VENTILATOR | Model HRV |
| ENERGY RECOVERY VENTILATOR | Model ERV |
| UV LIGHTS | Model UVL |

## ACCESSORIES (Continued)

| DESCRIPTION | ACCESSORY | 14” | 17” | 21” | 24” |
|---|---|---|---|---|---|
| Cartridge Media Filter - 16” (407 mm) (MERV 11) | FILXXCAR0116 | X | X | - | - |
| Cartridge Media Filter - 16” (407 mm) (MERV 8) | FILXXCAR0016 | X | X | - | - |
| Cartridge Media Filter - 20” (508 mm) (MERV 8) | FILXXCAR0020 | - | - | X | - |
| Cartridge Media Filter - 20” (508 mm) (MERV11) | FILXXCAR0120 | - | - | X | - |
| Cartridge Media Filter - 24” (610 mm) (MERV 8) | FILXXCAR0024 | - | - | - | X |
| Cartridge Media Filter - 24” (610 mm) (MERV11) | FILXXCAR0124 | - | - | - | X |
| EZ Flex Cabinet Side or Bottom - 16” | EZXCAB--0016 | X | X | - | - |
| EZ Flex Cabinet Side or Bottom - 20” | EZXCAB--0020 | - | - | X | X |
| EZ Flex Replacement Filters 16” MERV 10 | EXPXXFIL0016 | X | X | - | - |
| EZ Flex Replacement Filters 16” MERV 13 | EXPXXFIL0316 | X | X | - | - |
| EZ Flex Replacement Filters 20” MERV 10 | EXPXXFIL0020 | - | - | X | - |
| EZ Flex Replacement Filters 20” MERV 13 | EXPXXFIL0320 | - | - | X | - |
| EZ Flex Replacement Filters 24” MERV 10 | EXPXXFIL0024 | - | - | - | X |
| EZ Flex Replacement Filters 24” MERV 13 | EXPXXFIL0324 | - | - | - | X |
| EZ-Flex Filter with End Caps - 16” (407 mm) (MERV 10) | EXPXXUNV0016 | X | X | - | - |
| EZ-Flex Filter with End Caps - 16” (407 mm) (MERV 13) | EXPXXUNV0316 | X | X | - | - |
| EZ-Flex Filter with End Caps - 20” (508 mm) (MERV 10) | EXPXXUNV0020 | - | - | X | - |
| EZ-Flex Filter with End Caps - 20” (508 mm) (MERV 13) | EXPXXUNV0320 | - | - | X | - |
| EZ-Flex Filter with End Caps - 24” (610 mm) (MERV 10) | EXPXXUNV0024 | - | - | - | X |
| EZ-Flex Filter with End Caps - 24” (610 mm) (MERV 13) | EXPXXUNV0324 | - | - | - | X |
| Media Filter Cabinet - 20” | FILCABXL0020 | - | - | X | - |
| Media Filter Cabinet - 24” | FILCABXL0024 | - | - | - | X |
| Media Filter Cabinet -16” | FILCABXL0016 | X | X | - | - |

© 2022 Carrier. All rights reserved.
Edition Date: 08/22
**Catalog No: SS-PG80MSAA-01 REV A**
A Carrier Company
Replaces:**SS-PG80MSAA-01**
**Manufacturer reserves the right to change, at any time, specifications and designs without notice and without obligations.**