CO2 Room Sensor with Temperature

#NSA-HH/CO2-R2-CP-C, NSA-HH/CO2-R2O-CP-C, NSA-HH/CO2-R2SO-CP-C – 11/14/2019

Installation and Operation

Overview



The Carrier Carbon Dioxide Room Series Sensor with Temperature, Setpoint, and Override monitors the carbon dioxide (CO2) levels in commercial, school, and office-type environments. The concentration of CO2 is a strong indication of the overall indoor air quality. The NSA-HH/CO2-R2 Series is based on a single beam, non-dispersive infrared technology and is a cost-efficient solution for measuring carbon dioxide levels for building climate control. In addition, ABC software eliminates the need for manual calibration. Carbon Dioxide concentration is measured up to 2,000 ppm and is converted into proportional analog outputs. The factory default output is 4-20 mA, whereas 0-5 VDC and 0-10 VDC outputs are field selectable via integral dip switches. Thermistor temperature outputs, along with setpoint and override, are available as options for this configuration as well. The NSA-HH/CO2-R2 Series provides data which can be used in conjunction with a Building Automation System or Demand Control Ventilation to decrease energy consumption while creating a healthier indoor climate.

Applications: Schools, Office Buildings, Auditoriums, Gymnasiums, Shopping Malls, Theatres, Demand Control Ventilation & Economizers

Part Numbers

NSA-HH/CO2-R2-CP-C **NSA-HH/CO2-R2O-CP-C** **NSA-HH/CO2-R2SO-CP-C**

Specifications

Supply Voltage:	24 VAC +/-20%, 50/60 Hz (half-wave rectifier) | 16.5-40 VDC Max.
Power Consumption:	3 VA for 24 VAC, 3W for 24 VDC (peak); <0.9W (average)
Sensing Technology:	Single beam infrared sensing technology (NDIR)
Sensing Method:	Diffusion
Measurement Range Default:	0 to 2,000 ppm
Extended CO2 Ranges:	Up to 10,000 ppm (factory set)
Extended Range Accuracy:	+/- 30 ppm and +/- 5% of reading
CO2 Output Signal:	**Output 1**: 0-5 VDC or 0-10 VDC (Default) | **Output 2**: 4-20 mA (500 Ohm Load maximum)
Fail Safe:	Polarity protected
CO2 Accuracy[1]:	+/- 40 ppm +/- 3% of reading (@ 15-35°C; 20-70% RH and 101.3 kPa)
Pressure Dependence:	+ 1.6% reading per kPa (deviation from standard pressure 101.3 kPa)
Response Time:	≤ 2 minutes, diffusion
Warm-Up Time:	< 1 minute (@ full specs < 15 minutes)
Temperature Accuracy:	+/- 1°F (+/- 0.6ºC)
Operating Temperature Range:	32 to 122ºF (0 to 50ºC)
Operating Humidity Range:	0 to 95%, non-condensing
Enclosure:	ABS, Plastic, White, UL94-HB
Sensor Coverage Area:	7,500 sq. ft maximum
Mounting Height:	4-6 ft
Sensor Life[2]:	> 15 years (typical)
Calibration[3]	ABC algorithm (Automatic Baseline Correction)
Product Dimensions:	(H) 4.50” (114.30 mm) x (W) 2.75” (69.85 mm) x (D) 1.12” (28.45 mm)
Product Weight:	0.230 lbs (0.104 kg)
Agency Approvals:	EMC Directive 2014/30/EC | RoHS Directive 2011/65/EU

[1]Accuracy is de-red after minimum three (3) ABC periods (1 period = 8 days) of continuous operations
[2]In normal indoor air quality (IAQ) applications | Corrosive environments are excluded
[3]Building CO2 levels must drop to 400 ppm same time during the week for ABC to work properly | If the building is occupied 24 hours / day, ABC must be turned off

Dimensional Drawing

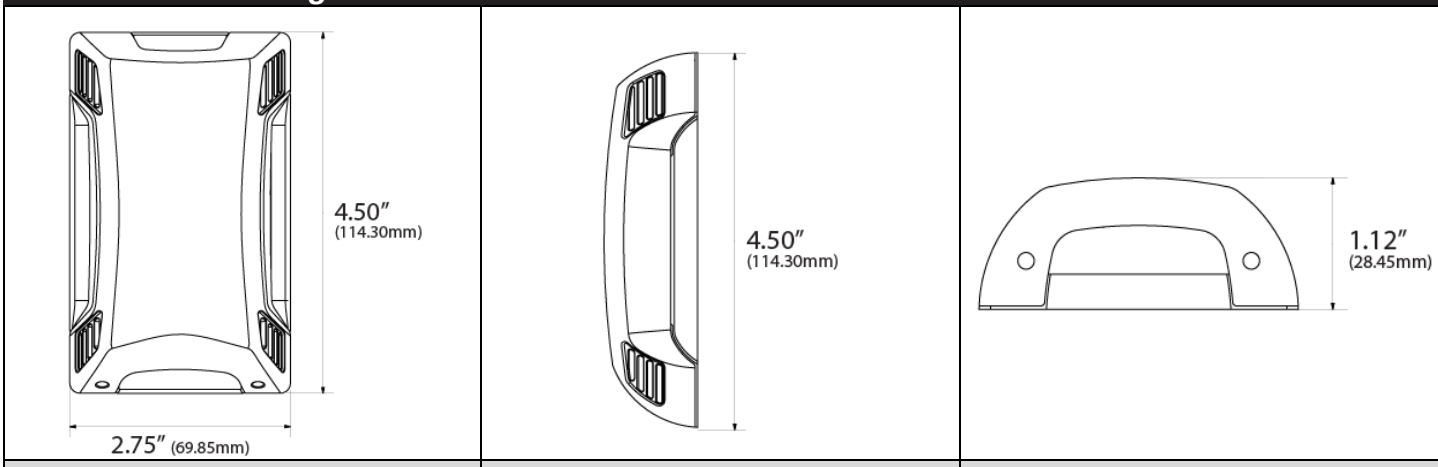

Front View	Right View	Bottom View

Figure 1

Installation

PRECAUTIONS

- Remove power before wiring. Never connect or disconnect wiring with the power applied. Do not allow live wires to touch the circuit board.
- An isolation transformer is recommended when powering the device with 24vac.
- Do not run the wiring in any conduit with line voltage.
- Failure to wire devices with the correct polarity when using a shared transformer may result in damage to any device powered by the shared transformer.

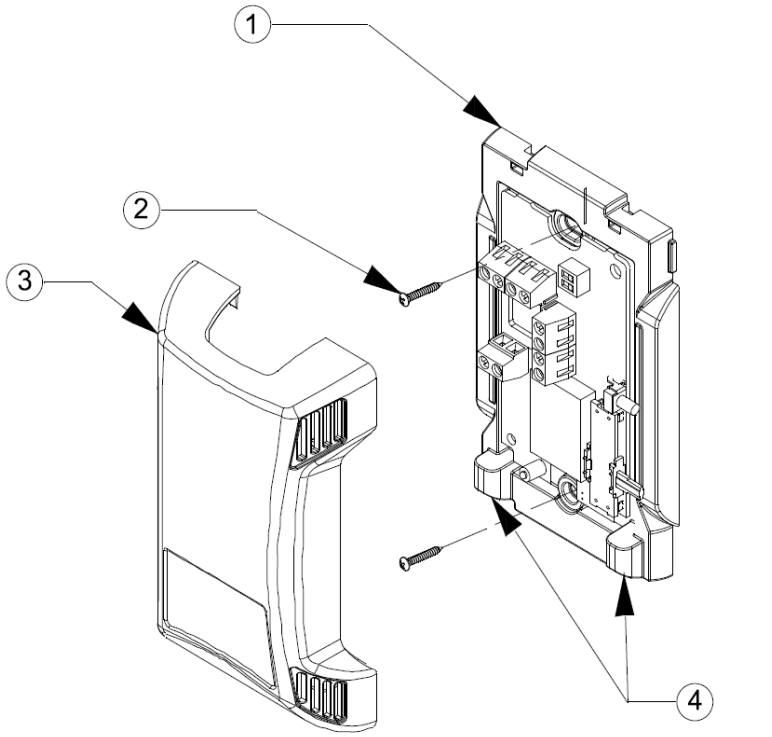

1. Wall Plate w/PCB
2. (2) 6-32 X 1" Mounting Screws
3. Cover
4. Cover Screws (included in wall plate)

Figure 2

Wiring and Mounting Instructions

The PCB must be handed carefully and protected from electrostatic discharge. The power supply has to be connected to VIN and COM. COM is considered as system ground.

1. **Mount the wall plate**: Run the wires from the back of the wall plate and through the square wire hole in the PCB. Mount the wall plate to the wall, being careful not to trap wires between the wall and the plate.
2. **Configure DIP switches**: The default setting is 0-10 VDC output (switch 1 on) and ABC on (switch 2 on). For 0-5 VDC output set switch 1 to off. To turn off ABC set switch 2 to off. The 4-20 mA output can be used with switch 1 in the on or off position.

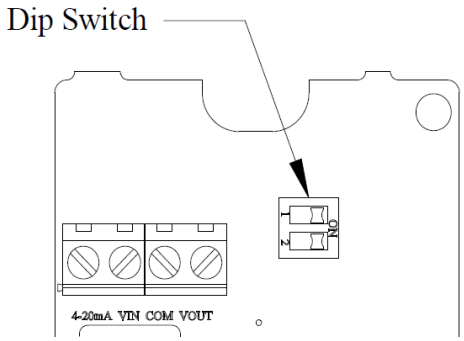

Figure 3

3. **Connect wiring to terminal blocks**: Connect wiring for voltage in, signal common, and voltage or current output. Connect wires for temperature, override switch and/or setpoint, if these configurations are used.

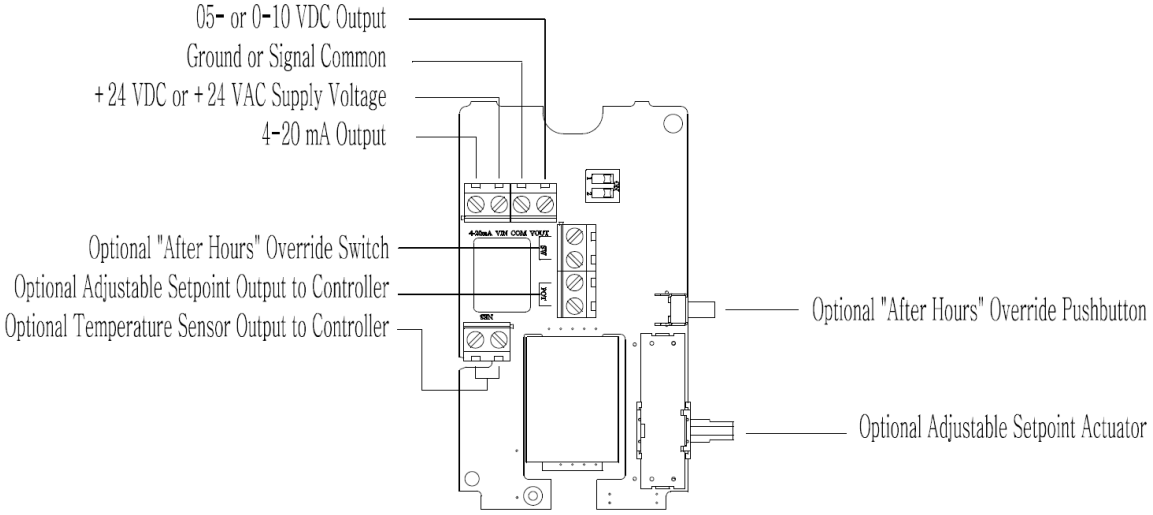

Figure 4

Power Supply

The power supply has to be connected to VIN and COM. COM is considered as system ground. The same ground reference has to be used for the NSA-HH/CO2-R2 unit and for the DDC/signal receiver.

Connections of the main terminal of NSA-HH/CO2-R2

Shielded cable with 16 to 22AWG conductors is recommended. The cover must be removed to wire the unit's terminal blocks.

- When using ½" conduit, the strain relief fitting must be removed from the enclosure.
- Make sure that any conduit or metal fittings do not come in contact with the circuit board.

The same ground reference has to be used for the NSA-HH/CO2-R2 unit and for the control system!

Terminal	Function	Electrical Data	Remarks Standard settings
VIN	Power (+)	24 VAC/DC (+) (+/-20%), 2W	
COM	Power ground (-)	24 VAC/DC (-)	System voltage reference
VOUT	Analogue output 1 (+)	0-5 VDC or 0-10 VDC	0-2000 ppm CO2
4/20mA	Analogue output 2 (+)	4 to 20mA	0-2000 ppm CO2

4. **Attach and secure cover**: There are two tabs on the top of the cover that fit into slots on the top of the wall plate. Begin with the cover above the wall plate with the bottom of the cover angled out from the wall plate. Move the cover down to seat the tabs and then push the bottom of the cover in to the wall plate. Rotate holding screws out from the wall plate to secure the cover in place. The holding screws turn counter-clockwise to secure cover to wall plate, and clockwise to remove cover from wall plate.

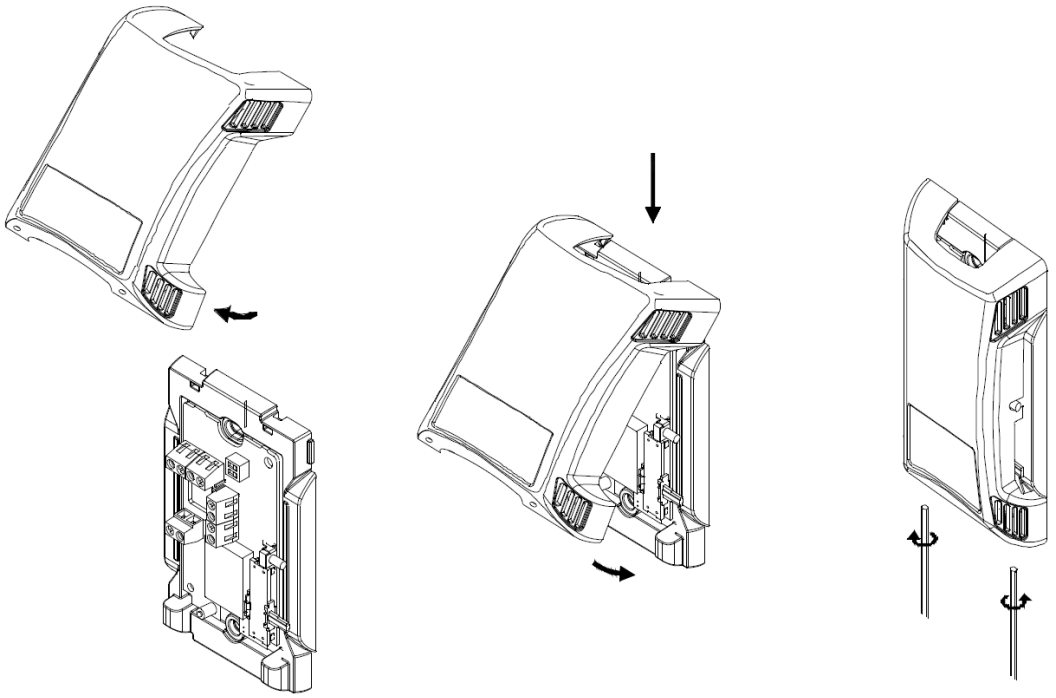

Figure 5

Maintenance / Calibration

The NSA-HH/CO2-R2 is basically maintenance free in normal environments thanks to the built-in self-correcting ABC algorithm. The ABC logic may need to be turned off in some applications, such as those with continuous occupancy. Discuss your application with ACI in order to get advice for a proper calibration strategy.

NOTE The sensor accuracy is defined at continuous operation (at least 3 weeks after installation)