TruVu™ VVTZC-E2

Installation and Start-up Guide

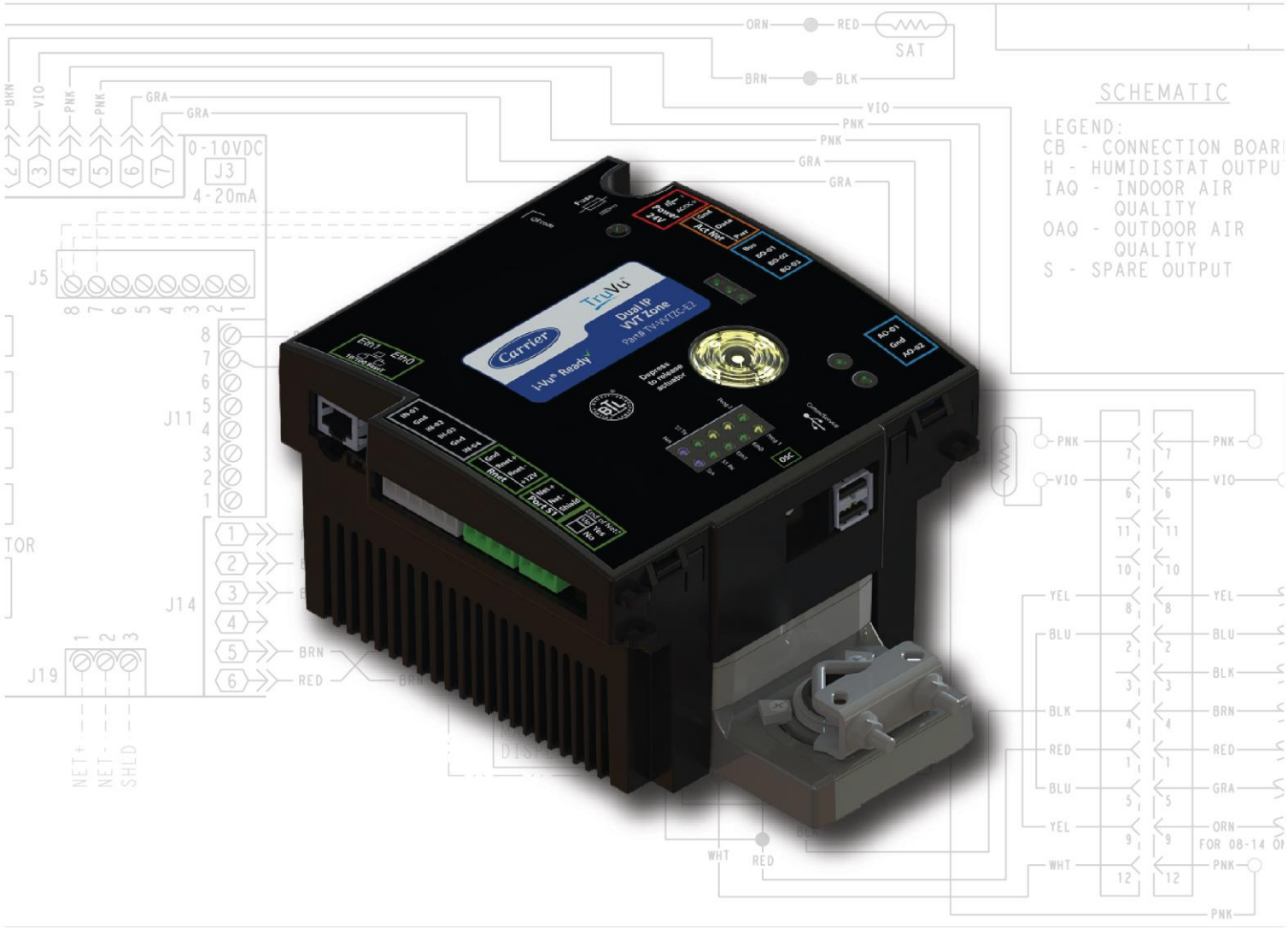

©2022 Carrier. All rights reserved. • Catalog No. 11-808-876-01 • 7/14/2022

 Verify that you have the most current version of this document from **www.hvacpartners.com**, the **Carrier Partner Community** website, or your local Carrier office.

Important changes are listed in **Document revision history** at the end of this document.

©2022 Carrier. All rights reserved.

Contents

What is the TV-VVTZC-E2? **1**
- Specifications 4
- Safety Considerations 7
- Zone sensors 8
- Touchscreen devices 8
- Field-supplied hardware 9

Installing the TV-VVTZC-E2 ..... **10**

To mount the TV-VVTZC-E2 ..... **11**

Wiring for power **13**
- To remove the TV-VVTZC-E2's cover 13
- To wire for power 14

Addressing the TV-VVTZC-E2 through the Comm/Service ports **15**
- To set the IP address 17

Addressing a network of controllers using the controller setup Local Network tab **18**
- Method 1: To address when you know the serial numbers 18
- Method 2: To address when you do not know the serial numbers 19

Wiring for communications **21**

Wiring devices to the TV-VVTZC-E2's Rnet port **22**

Wiring devices to the TV-VVTZC-E2's Act Net port **23**

Wiring inputs and outputs **24**
- Inputs 24
- Outputs 24
- Wiring specifications 25
- To wire inputs and outputs 25
- To adjust input and output properties 28
  - Input values 29
  - Output values 30
  - Resolution values 30
  - Offset/Polarity values 31
- Wiring sensors to the TV-VVTZC-E2's inputs 32
  - Wiring specifications 32
  - To wire the T55 sensor to the controller 33
  - To wire the Supply Air Temperature sensor to the controller 33
  - To wire and mount the DAT sensor 34
  - To wire the CO2 sensor to the controller 34
  - To wire the Relative Humidity sensor to the controller 37
  - Wiring a remote occupancy sensor 38
- Wiring equipment to outputs 38
  - Wiring specifications 39
  - Wiring diagram legend 39
  - Single duct only 40
  - Single duct 2-position hot water 41
  - Single duct modulating hot water 42
  - Single duct SCR electric heat 43
  - Single duct combination baseboard and ducted heat 44
  - Single duct staged electric heat 45
  - Fan box 2-position hot water 46
  - Fan box modulating hot water - ducted or baseboard 47
  - Fan box SCR electric heat 48
  - Fan box combination baseboard and ducted heat 49

Fan box 2-stage electric heat 50
Wiring field-supplied actuators to the analog output 50
Start-up 53
Configuring the TV-VVTZC-E2's properties 53
Configuring ZS Sensors 54
Performing system checkout 54
Commissioning the TV-VVTZC-E2 55
Balancing the system 55
Sequence of operation 58
Temperature sensors 58
Zone airflow control 59
Zone reheat control 59
Demand control ventilation (DCV) and dehumidification using optional sensors 61
Occupancy 62
Alarms 63
Demand limiting 64
Linkage 64
Linkage modes and operation 65
Zone Environmental Index 66
Downloading the TV-VVTZC-E2 68
To download from the i-Vu® interface 68
Adjusting the TV-VVTZC-E2 driver properties 69
Driver 69
Device 71
Notification Classes 71
Calendars 72
Common Alarms 73
Specific Events 74
Custom Translation Tables 74
BACnet Controller Properties 74
BACnet Firewall 75
Network Diagnostics - Statistics 76
Network Diagnostics - Packet Capture 77
Act Net Bus 78
Communication Status 80
Flow Calibration Archive 80
To set up Network Statistic trends 80
To set up the controller through the Comm/Service ports 82
ModStat tab 82
Device tab 83
Ports tab 83
BACnet tab 84
Security tab 84
Local Network tab 84
To communicate through the BACnet/Service port network 88
Wiring specifications 89
To communicate locally through the Rnet port 90
To set up a Local Access connection in the i-Vu® interface 91
Troubleshooting 92
LEDs 92
To use the Locator LED 94
To configure custom Prog 1/2 LEDs 95
To get a Module Status report 95
Troubleshooting inputs and outputs 96

To get a Device Log 97
To get the TV-VVTZC-E2's serial number 97
To take the TV-VVTZC-E2 out of service 98
To replace the TV-VVTZC-E2's fuse 98
To revert to default settings 99
Compliance 100
FCC Compliance 100
CE and UKCA Compliance 100
Industry Canada Compliance 100
BACnet Compliance 100
Appendix A: TV-VVTZC-E2 Points/Properties 101
Status 101
Unit Configuration 102
Setpoints 105
Setpoints for ZS and wireless sensors 111
Alarm Configuration 112
Service Configuration 114
Maintenance 121
Alarms 124
Linkage 125
I/O Points 127
Appendix B: VVT terminal modes 130
Appendix C: ZS Sensor display for TV-VVTZC-E2 132
Appendix D: BACnet points list 133
Appendix E: Module Status field descriptions 136
Document revision history 138

What is the TV-VVTZC-E2?

The TruVu™ Advanced Application Controller (part no. TV-VVTZC-E2):

- Runs 2 control programs
  - a VVT zone Product Integrated Control (PIC)
  - an optional programmable Zone Controller II program
- Supports BACnet/IP communications on the 10/100 Ethernet port as a single node in a daisy-chain configuration or as part of a network using a ring topology
- Supports DHCP IP addressing
- Has built-in network diagnostic capture functionality for troubleshooting
- Has network statistics that can be viewed numerically or as trend graphs
- Supports Rnet devices
- Supports Act Net devices
- Works with the i-Vu® v7.0 or later system with the latest cumulative patch
- Provides 4 universal inputs, 3 binary outputs, and 2 analog outputs

The TV-VVTZC-E2 controls zone temperature in single duct, fan powered, Variable Volume and Temperature (VVT®) applications. It has a built-in actuator, uses a patented flow control algorithm, and mounts directly on the VVT terminal damper shaft.

The TV-VVTZC-E2 with actuator maintains zone temperature by operating the terminal fan and regulating the flow of conditioned air into the space. Buildings with diverse loading conditions can be supported by controlling the air source heating and cooling sources or supplemental heat. The TV-VVTZC-E2 provides dedicated control functions for single duct and fan-powered terminals with modulating heat, staged duct heat (up to 3 stages of ducted heat for single duct or up to 2 stages of ducted heat for fan-powered terminals), or combination baseboard and ducted heat.

The i-Vu Control System uses linkage to exchange data between the zone terminals and their air source to form a coordinated HVAC system. The system's air source controller, zone controllers, and bypass controller are linked so that their data exchange can be managed by one zone controller configured as the VVT Master.

You can disconnect the actuator from the controller and mount them separately, connecting them with just the actuator cable or using an additional extension cable, up to a maximum distance of 300 feet.

©2022 Carrier.
All rights reserved.

The following illustration shows the TV-VVTZC-E2 in a typical i-Vu® Control System.

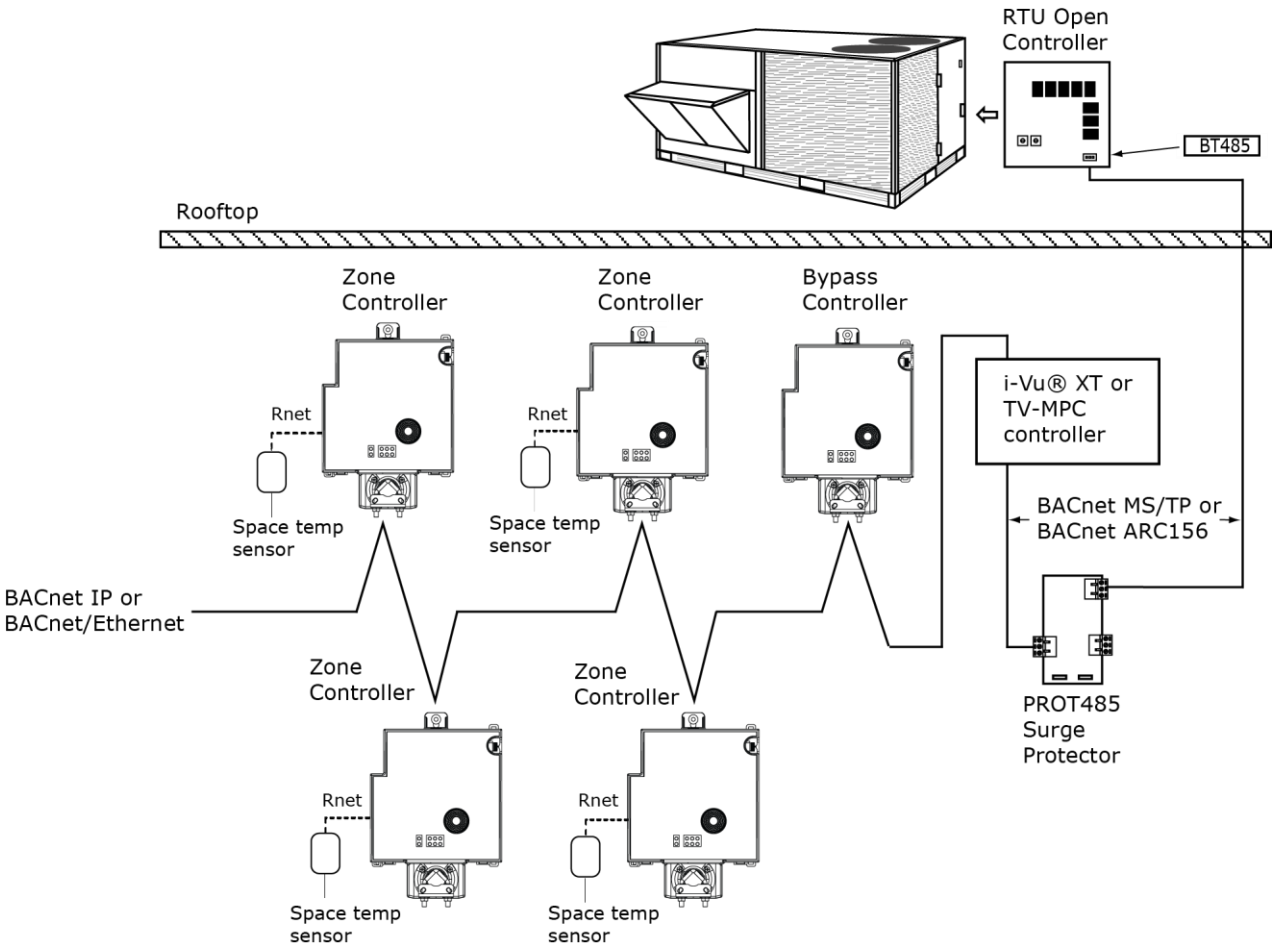

©2022 Carrier.
All rights reserved.



You can use the TV-VVTZC-E2's physical communication ports as follows:

Port	Port type	For routing this type of communication...	At...
Eth0 Eth1	10/100 Mbps Ethernet	BACnet/IP BACnet/Ethernet	10 or 100 Mbps
S1	High-speed EIA-485 port	BACnet/MSTP	9.6 to 115.2 kbps

©2022 Carrier.
All rights reserved.

The TV-VVTZC-E2 also has the following ports:

- Rnet port for connecting ZS sensors, an Equipment Touch, an TruVu™ ET Display, and Wireless Adapter for wireless sensors
- Comm/Service USB ports for connecting locally to controller setup pages, the TruVu™ ET Display, or the Carrier wireless service adapter
- Act Net port supports a combination of up to 5 Act Net addresses. Act Net devices must be addressed as follows:
    - Address **1** is reserved for the built-in actuator
    - Address **2** and **3** are reserved for the VAV Zone II Secondary Duct
    - Address **4** and **5** for i-Vu® Smart Valves

Specifications

Driver	drv_fwex_< version >.driverx
Maximum number of control programs **NOTE** Programs may be limited by hardware.	2 **NOTE** You can run 1 VVT zone Product Integrated Control (PIC) and 1 programmable Zone Controller II program, OR up to 2 Zone Controller II programs.
Maximum number of BACnet objects*	12000
Third-party BACnet integration points **NOTE** Must be on the BACnet/IP network.	100

* Depends on available memory.

Power	24 Vac ±15%, 50–60 Hz, 50 VA 24 Vdc ±10%, 18 W **NOTE** The above power consumption is for the controller only. Adding devices to the Act Net bus increases total power consumed.
Actuator	Belimo brushless DC motor, torque 45 inch-pounds (5 Nm), runtime 154 seconds
Eth0, Eth1	10/100 BaseT, full duplex, Ethernet ports for BACnet/IP and/or BACnet/Ethernet communication. Under normal operation, network traffic not destined for this controller is repeated to the other Ethernet port. When the controller is powered off, all traffic received on one port is mirrored to the other port.

©2022 Carrier.
All rights reserved.

Rnet port	• Supports up to 10 wireless and/or ZS sensors, and one Equipment Touch or TruVu™ ET Display • Supplies 12 Vdc/260 mA power to the Rnet across its rated temperature range. NOTE Ambient temperature and power source fluctuations exceeding the listed operating ranges may reduce the power supplied by the Rnet port. **NOTE** If the total power required by the sensors on the Rnet exceeds the power supplied by the Rnet port, use an external power source. The Wireless Adapter, Equipment Touch, or TruVu™ ET Display must be powered by an external power source. See the specifications in each device's Installation and Start-up Guide to determine the power required.
Act Net port	Supports a combination of up to 5 Act Net addresses. Act Net devices must be addressed as follows: ○ Address **1** is reserved for the built-in actuator ○ Address **2** and **3** are reserved for the VAV Zone II Secondary Duct ○ Address **4** and **5** for i-Vu® Smart Valves Maximum power available for Act Net devices: • AC supply - 25 VA (1 A) • DC supply - 15W (0.625A) • Use an external transformer if your devices exceed the maximum power.
Comm/Service port	USB 2.0 host ports for setting up the controller and troubleshooting through a local connection to a computer, connecting to the TruVu™ ET Display, or the Carrier wireless service adapter.
Universal inputs	4
	Inputs are configurable in the control program for 0–5 Vdc, 0–10 Vdc, thermistor, dry contact, or pulse counter.
Input resolution	12 bit A/D
Input pulse frequency	10 pulses per second. Minimum pulse width (on or off time) required for each pulse is 50 msec.
Analog outputs	2 analog outputs, 0–10 Vdc Configurable as 12 Vdc pulse width modulated (PWM) control signal.
Binary outputs	One bank of 3 N.O. binary outputs. Each relay contact rated at 3.75 A max. @ 30 Vac/Vdc. Each bank is limited to Class 2 requirements of 100 VA / 4.2 A. Configured normally open. See *Output values* (page 30).
Output resolution	12 bit D/A
Controller microprocessor	32-bit ARM Cortex-A8, 600MHz, processor with multi-level cache memory
Memory	4 GBs eMMC Flash memory and 256 MB DDR3 DRAM (2 MB available). User data is archived to non-volatile Flash memory when parameters are changed, every 90 seconds, and when the firmware is deliberately restarted. **NOTE** When you change a parameter, you must wait 30 seconds before turning the power off, in order for the change to be saved.
Real-time clock	Real-time clock keeps track of time in the event of a power failure for up to 3 days.

©2022 Carrier.
All rights reserved.

Protection	Field-replaceable glass fuse (3A fast-acting 5mm x 20mm) The power and network ports comply with the EMC requirements EN50491-5-2. **CAUTION** To protect against large electrical surges on serial EIA-485 networks, place a PROT485 at each place wire enters or exits the building.

LED status indicators	See *LEDs* (page 92) for details.
	• Tricolor **Net** LED to show network status
	• Tricolor **Sys** LED to show controller status
	• A **Tx** (Transmit) and **Rx** (Receive) LED for Port S1
	• **Tx** (Transmit) and **Rx** (Receive) activity LED and yellow link status LED for the following ports:
	  ○ Ethernet port Eth0
	  ○ Ethernet port Eth1
	• Output LEDs indicate status of each output.
	• **Prog 1/2** LEDs are customizable. See *To configure custom Prog 1/2 LEDs* (page 95).
	• Locator LED to find the controller during commissioning and to assess damper rotation. See *To use the Locator LED* (page 94).

Environmental operating range	32–122°F (0–50°C), 10–95% relative humidity, non-condensing
Physical	Fire-retardant plastic ABS, UL94-5VA
Terminal blocks and connectors	Screw-type terminal blocks. 0.2 in (5.08 mm) pitch connectors
Mounting	Damper shaft/mounting bushing
	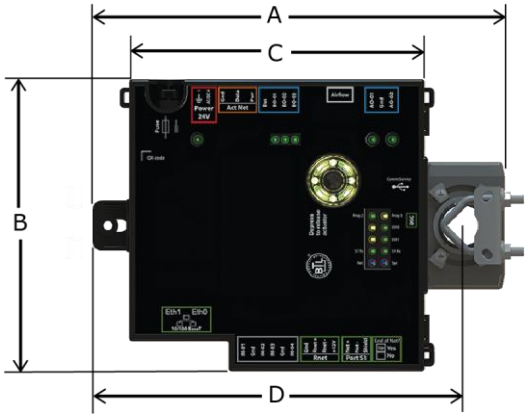
Overall dimensions	A: 8.39 in. (21.30 cm) B: 5.95 in. (15.11 cm) C: 6.00 in. (15.24 cm) D: 7.52 in. (19.10 cm) Depth: 3.83 in. (9.72 cm)
Weight	1.8 lbs (0.82 kg)
MTBF @ 77°F (25°C)	184,811 hours

©2022 Carrier.
All rights reserved.

BACnet support	Conforms to the BACnet Advanced Application Controller (B-AAC) and B-BBMD Standard Device Profiles as defined in ANSI/ASHRAE Standard 135-2012 (BACnet) Annex L, Protocol Revision 14
Compliance	United States of America: FCC CFR47, Part 15, Subpart B, Class B
	Canada: Industry Canada Compliant, ICES-003, Class B Contains IC ID: 6713A-STM300U
	Europe: CE Mark, UK: UKCA EN50491-5-2:2009; Part 5-2: EMC requirements for HBES/BACS used in residential, commercial and light industry environment RoHS Compliant: 2015/863/EU REACH Compliant

Safety Considerations

CAUTION

Air conditioning equipment will provide safe and reliable service when operated within design specifications. The equipment should be operated and serviced only by authorized personnel who have a thorough knowledge of system operation, safety devices, and emergency procedures.

Good judgment should be used in applying any manufacturer's instructions to avoid injury to personnel or damage to equipment and property.

WARNING Electrical Shock Hazard

Failure to follow this warning could cause personal injury, death, and/or equipment damage.

Disconnect all power to the unit before performing maintenance or service. Unit may automatically start if power is not disconnected.

WARNING Follow all local, state, and federal laws regarding disposal of equipment containing hazardous materials such as mercury contactors.

©2022 Carrier.
All rights reserved.

Zone sensors

You can wire ZS sensors and/or a Wireless Adapter that communicates with wireless sensors to the TV-VVTZC-E2's Rnet port. You can have up to 10 ZS and/or wireless sensors.

NOTES

- A control program can use no more than 5 ZS sensors, so you must use multiple control programs if your Rnet network has more than 5 sensors.
- ZS and wireless sensors can share the Rnet with an Equipment Touch or TruVu™ ET Display.

CAUTION Rnet power
The Rnet port provides 12 Vdc at up to 260 mA. When determining which devices to put on the Rnet, verify that the total current draw of the sensors does not exceed the controller's Rnet power. See the sensor's I*nstallation and Start-up Guide* to determine the power required.

Touchscreen devices

You can connect the TV-VVTZC-E2 to the touchscreen devices using the Rnet port or one of the Comm/Service ports.

Rnet port

You can wire an Equipment Touch or TruVu™ ET Display to the TV-VVTZC-E2's Rnet port to view or change the controller's property values, schedule equipment, view trends and alarms, and more, without having to access the system's server. The Rnet port can have one Equipment Touch or TruVu™ ET Display, plus ZS sensors and/or a Wireless Adapter that communicates with wireless sensors.

NOTE These touchscreen devices are not powered by the Rnet port.

- The TruVu™ ET Display requires a 24 Vdc external power source.
- The Equipment Touch requires a 24 Vac external power source.

USB ports

You can connect the TruVu™ ET Display to either of the TV-VVTZC-E2's Comm/Service ports to view or change the controller's property values, schedule equipment, view trends and alarms, and more, without having to access the system's server.

NOTES

- These touchscreen devices are not powered by the USB port.
- The TruVu™ ET Display requires a 24 Vdc external power source.

CAUTION A touchscreen device can share a power supply with the Carrier controller if:

- The power source shared by the controller and Equipment Touch is AC power.
- The power source shared by the controller and TruVu™ ET Display is DC power.
- You maintain the same polarity.
- You use the power source only for Carrier controllers.

©2022 Carrier.
All rights reserved.

Field-supplied hardware

Each zone controller installation requires the following field-supplied components:

- zone terminal unit
- round or rectangular mounting bracket
- space temperature sensor
- supply air temperature sensor
- 2 x 4 in. standard single gang electrical box
- power supply — 24 Vac, 50 VA or 24vdc 18W
- two no. 10 x 1/2 in. sheet metal screws (to secure SAT sensor to duct)
- two no. 6-32 x 5/8 in. screws (to mount space temperature sensor base to electrical box)
- wiring
- bushings (required when mounting SAT sensor in a duct 6-in. (15.2 cm) or less in diameter)

Optional:

- contractors (if required for fan or electric heat)
- indoor air quality sensor
- relative humidity sensor
- 2 screws and 2 hollow wall anchors (to mount relative humidity sensor directly to wall)
- valve and actuator for hot water heat (if required)

©2022 Carrier.
All rights reserved.

Installing the TV-VVTZC-E2

To install the TV-VVTZC-E2:

1. *Mount the controller* (page 11).
2. *Wire the controller for power* (page 13).
3. *Set the controller's address* (page 18, page 15).
4. *Wire the controller to the BACnet/IP or BACnet/Ethernet network* (page 21).
5. *Wire the inputs and outputs* (page 24).

©2022 Carrier.
All rights reserved.

To mount the TV-VVTZC-E2

To mount the TV-VVTZC-E2

1 Turn the damper shaft to fully close the damper position. Ensure the damper is closed.

2 Mount the controller to the VVT terminal by sliding the clamp assembly onto the damper shaft.

3 Mount and secure an enclosure to cover the TV-VVTZC-E2.

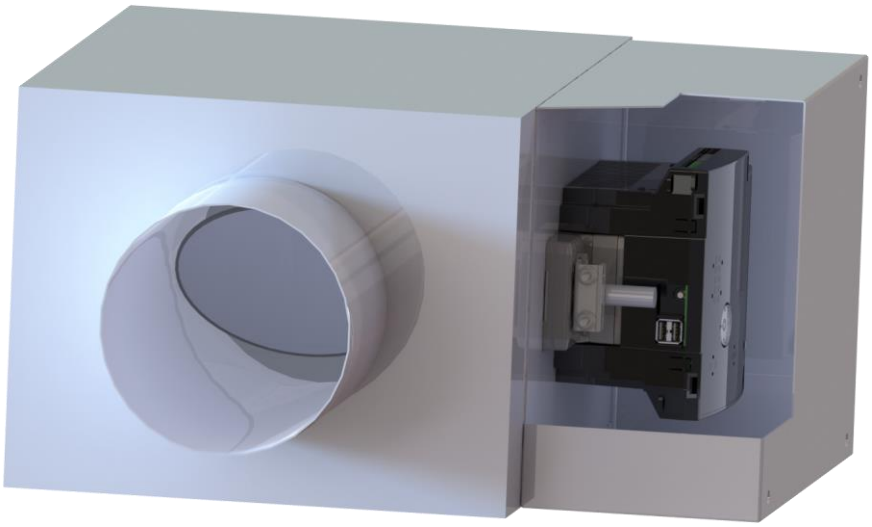

NOTE For service access, we recommend that you allow at least 1 foot (.3 m) of clearance between the front of the enclosure and adjacent surfaces.

©2022 Carrier.
All rights reserved.

4 Secure the controller and the actuator by screwing the rear mounting tab into the VVT terminal, using the screw that is supplied with the TV-VVTZC-E2.

NOTE We recommend that you use the M5 - .75 in. (19 mm), self-tapping screw that is shipped with the TV-VVTZC-E2.

CAUTION Center the washer in the mounting screw slot. Secure the TV-VVTZC-E2 to allow lateral movement of the damper shaft.

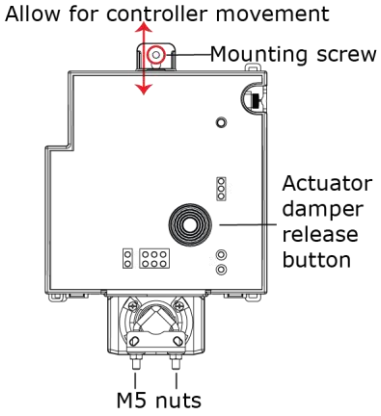

5 Hold down the TV-VVTZC-E2's actuator release button and rotate the actuator clamp in the same direction that closed the damper. Rotate the clamp until it stops, then rotate it back one notch.

6 Release the button.

7 Tighten the actuator clamp to the damper shaft by tightening the two M5 nuts.

8 Hold down the actuator release button and rotate the damper from fully closed to fully open. If the damper traveled less than 90 degrees, do the following to prevent the damper traveling past fully open:

a) Loosen the appropriate stop clamp screw.

b) Move the stop clamp until it contacts the edge of the actuator cam.

c) Tighten the screw.

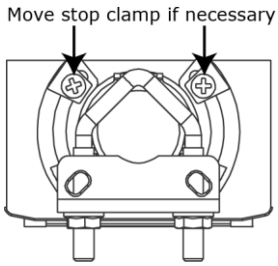

9 Hold down the actuator release button, rotate the damper to verify that it opens and closes, then release the button.

©2022 Carrier.
All rights reserved.

Wiring for power

WARNING Do not apply line voltage (mains voltage) to the controller's ports and terminals.

CAUTIONS

- The TV-VVTZC-E2 is powered by a Class 2 power source. Take appropriate isolation measures when mounting it in a control panel where non-Class 2 circuits are present.
- Carrier controllers can share a power supply as long as you:
  - Maintain the same polarity.
  - Use the power supply only for Carrier controllers.

To remove the TV-VVTZC-E2's cover

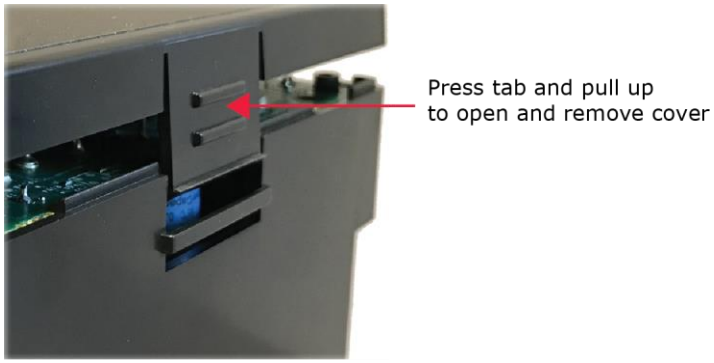

TIP To attach the cover to the base, secure a cable tie through the two cable tie brackets as shown below.



©2022 Carrier.
All rights reserved.

To wire for power

1. Remove power from the power supply.
2. Remove the TV-VVTZC-E2's cover.
3. Pull the red screw terminal connector from the controller's power terminals labeled **24V**.
4. Connect the power supply's wires to the red screw terminal connector.
5. Connect an 18 AWG or larger wire from the power supply's negative (-) terminal to earth ground. This wire must not exceed 12 in. (30.5 cm).
6. Apply power to the power supply.
7. Measure the voltage at the red screw terminal connector to verify that the voltage is within the operating range of 20.4 to 28.8 Vac or 21.6 to 28.8 Vdc.
8. To verify the polarity of the wiring, measure the voltage from the negative terminal of the red screw terminal connector to a nearby ground. The reading should be 0V.
9. Insert the red screw terminal connector into the controller's power terminals.
10. Verify that the ⏻ LED on top of the controller is on.

©2022 Carrier.
All rights reserved.

Addressing the TV-VVTZC-E2 through the Comm/Service ports

You address the TV-VVTZC-E2 on the controller setup pages. The **Local Network** tab allows you to discover all i-Vu® XT or TruVu™ devices on a single network and configure them from that page. See *Addressing a network of controllers using the controller setup Local Network tab* (page 18) and the *Local Network* (page 84) tab.

You can connect the TV-VVTZC-E2 to a computer using a wireless or cable connection to either of the Comm/Service USB ports.

NOTE You cannot access the Service port by plugging an Ethernet cable into Eth0 or Eth1.

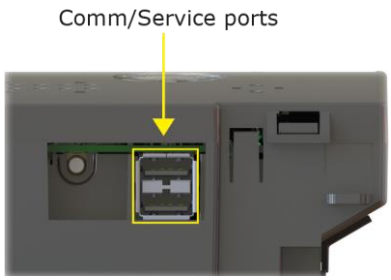

CAUTION The USB local access cable provides a common ground connection between the computer and the controller it connects to. Damage to the controller and possibly the computer's USB port will occur if the controller's input power polarity was not maintained and was also not properly grounded (floating). If you are not sure of the wiring polarity and that the controller was properly grounded, use a USB isolator between the computer and the controller.

To connect the TV-VVTZC-E2 to a computer using the Carrier wireless service adapter.

1. Insert the Carrier wireless service adapter (part# USB-W) into either of the controller's USB Comm/Service ports to communicate with a Wi-Fi-compatible computer.
2. Open your computer's wireless network display to view your available wireless networks.

   NOTE TV-VVTZC-E2 only supports the 5 GHz band and not the 2.4 GHz band.
3. Connect to the wireless network using the network SSID and password that are printed on the Carrier wireless service adapter.
4. Open a web browser on the computer and navigate to http://local.access or http://169.254.1.1 to see the controller setup pages.

©2022 Carrier.
All rights reserved.

To connect the TV-VVTZC-E2 to a computer using a cable.

1 Connect a USB Type-A Male to Male USB cable from a computer to either of the controller's Service USB ports, as shown below.

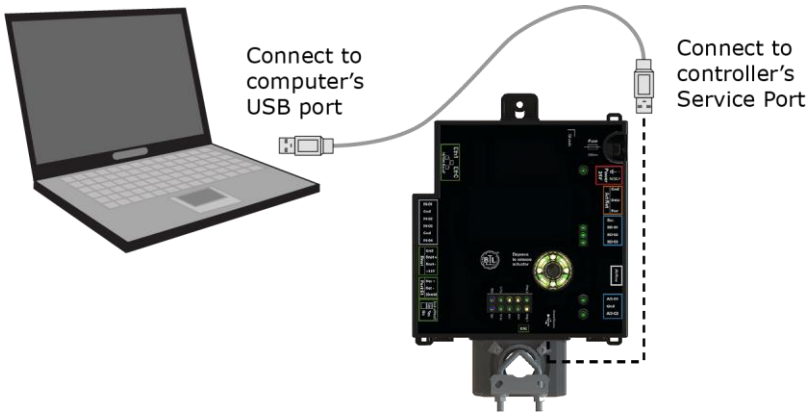

2 A new Ethernet connection will appear on your computer.

3 If your computer uses a static IP address, use the following settings for the new connection:

- Address: 169.254.1.x, where x is 2 to 7
- Subnet Mask: 255.255.255.248
- Default Gateway: 169.254.1.1

If it uses a DHCP address, leave the address as it is.

4 Open a web browser on the computer

Navigate to http://local.access or http://169.254.1.1 to see the controller setup pages.

See *To set up the controller through the Comm/Service ports* (page 82) for detailed information.

©2022 Carrier.
All rights reserved.

To set the IP address

You must define the TV-VVTZC-E2's IP addressing (IP address, subnet mask, and default gateway) on the controller setup **Ports** tab so that the controller can communicate with the i-Vu Server on the IP network.

Use one of the IP addressing schemes described below with the associated instructions that follow.

Use a...	If...
DHCP IP Address generated by a DHCP server	The IP network uses a DHCP server for IP addressing
Custom Static IP Address from your network administrator	You do not use a DHCP server and the answer to any of the following questions is yes. Will the i-Vu® system: • Share a facility's existing IP data network? • Be connected to the Internet? • Have at least one device located on the other side of an IP router? • Be connected to any third-party IP devices?

NOTE Carefully plan your addressing scheme to avoid duplicating addresses. If third-party devices are integrated into the system, make sure your addresses do not conflict with their addresses.

To set a DHCP IP address

1. On the controller setup **Modstat** tab, find the controller's **Ethernet MAC address** and write it down.
2. On the **Ports** tab under **IP Port**, select **DHCP**.
3. Click **Save**.
4. Write down the **IP Address**.
5. Give the DHCP network administrator the IP address and Ethernet MAC address and ask him to reserve that IP address for the controller so that it always receives the same IP address from the DHCP server.

To set a custom static IP address

1. Obtain the IP address, subnet mask, and default gateway address for the controller from the facility network administrator.
2. On the controller setup **Ports** tab under **IP Port**, select **Custom Static**.
3. Enter the **IP Address**, **Subnet Mask**, and **Default Gateway** addresses that the network administrator gave you.
4. Click **Save**.

©2022 Carrier.
All rights reserved.

Addressing a network of controllers using the controller setup Local Network tab

You can use the controller setup **Local Network** tab to discover Carrier i-Vu® XT or TruVu™ devices on a single network. You can configure them and assign addresses to each one using one of the methods described below.

NOTE For this discovery tool to work, the controllers must reside on the same subnet and be downloaded with drv_fwex_107-xx-xxxx or later.

Method 1: To address when you know the serial numbers

1. Connect one i-Vu® XT or TruVu™ device on the IP network to either of the Comm/Service ports. For details, see *Addressing the TV-VVTZC-E2 through the Comm/Service Ports* (page 15).

   NOTE This device is referred to as the "connected controller".

2. Browse to the Comm/Service port address (http://local.access or http://169.254.1.1).
3. On the **Ports** tab, set the device's **IP Address**, **Subnet Mask**, and **Default Gateway**.
4. On the controller setup **Local Network** tab, verify that the device's address information is displayed at the top of the page.
5. On the **Local Network** tab, click the **Clear All** button to erase the **Local Devices** table if there is information in it.
6. Click **Discover**. The table finds and lists the first 256 unconfigured devices on the same subnet. The table is sorted by serial number.

   NOTE A maximum of 256 i-Vu® XT or TruVu™ controllers can be discovered and displayed in the **Local Devices** table. If you have more than 256 controllers on your network, configure some or all the controllers in the table and click **Clear**. Check **Only Unconfigured** and click **Discover** again. A count appears above the table to report the total number of controllers and the discovered number.

7. To configure devices:
   - One at a time - Enter the IP **Address** and **Location** or name (optional) of each device you wish to configure. When you enter the IP address, that device inherits the original device's subnet mask and default gateway.
   - Multiple devices simultaneously - **Select** the devices you want to address, enter the starting IP address in the field under the **Address** heading, and then click **Assign**. The selected devices are automatically assigned sequential IP addresses.

   NOTE To change the IP Address, the device's **Mode** must be **Custom Static**.

For more details about discovering and configuring your devices, see **Local Network** *tab* (page 84).

©2022 Carrier.
All rights reserved.

Method 2: To address when you do not know the serial numbers

You will need physical access to each device so that you can press the DSC button on the side of the TV-VVTZC-E2. This allows you to identify the device on the controller setup **Local Network** page.



1 Connect to the Service port of one i-Vu® XT or TruVu™ IP device on the network. For details, see *Addressing the TV-VVTZC-E2 through the Comm/Service ports* (page 15).

2 Browse to the Service port address (http://local.access or http://169.254.1.1).

3 On the **Ports** tab, set the device's **IP Address**, **Subnet Mask**, and **Default Gateway**.

NOTE The other devices that you configure inherit this device's subnet mask and default gateway.

4 On the **Local Network** tab, click the **Clear All** button to erase any pre-existing data in the **Local Devices** table.

5 On the controller you want to address, press the DSC button on the bottom right. When pressed, a row appears in the **Local Devices** table on the **Local Network** tab. The row has a blue dot to indicate which controller has just had the button pressed.

6 In the row for the identified controller, enter the **Address** and **Location** (optional).

7 Repeat steps 3 and 4 for each controller that you want to address.

8 For more details about discovering and configuring your devices, see **Local Network** *tab* (page 84).

NOTE To physically identify a device that is displayed on the **Local Devices** table, you can click the **Blink** button, which lights up the Locator LED in the actuator release button.

©2022 Carrier.
All rights reserved.

The following are two possible methods you could use to identify and assign a network of controllers' addresses after following steps 1 - 4 above.

- Two technicians can work together if they are communicating throughout the process. The first technician physically travels around the building to each controller, tells his co-worker exactly where he is, and then presses the DSC button. The second technician, who is sitting at a computer connected to the controller, watches for the blue dot to show up on the **Local Devices** table on the **Local Network** tab, where he can enter the appropriate addressing and identifying information.

- One technician alone can address the controllers on a mobile device showing the Local Network page by plugging the Carrier wireless service adapter into a controller's Service port. Then, with the computer, move to each controller within 100 ft. of the adapter. Pressing the DSC button on the controller displays a blue dot in the table where the addressing information can be entered.

©2022 Carrier.
All rights reserved.

Wiring for communications

The TV-VVTZC-E2 communicates on the following ports.

Port	Protocol	Port type(s)	Speed(s)
Eth0 **Eth1**	BACnet/IP BACnet/Ethernet	Ethernet	10 or 100 Mbps
Port S1 [1]	BACnet/MSTP	RS485	9.6 to 115.2 kbps
Comm/Service USB Port [2]	USB 2.0	USB	
Rnet Port	See *Wiring devices to the TV-VVTZC-E2's Rnet port* (page 22).		
Act Net Port	See *Wiring devices to the TV-VVTZC-E2's Act Net port* (page 23).		

[1] Default for MS/TP is 76.8 kbps.

[2] See *To set up the controller through the Comm/Service ports* (page 82).

©2022 Carrier.
All rights reserved.

Wiring devices to the TV-VVTZC-E2's Rnet port

You can wire the following devices to the TV-VVTZC-E2's Rnet port in a daisy-chain configuration:

- ZS sensors
- Wireless Adapter that communicates with wireless sensors
- Equipment Touch
- TruVu™ ET Display

See the device's I*nstallation and Start*-up Guide for complete wiring instructions.

NOTES

- ZS sensors, a Wireless Adapter, and an Equipment Touch can share the same Rnet.
- The Rnet communicates at a rate of 115.2 kbps.

©2022 Carrier.
All rights reserved.

Wiring devices to the TV-VVTZC-E2's Act Net port

Supports a combination of up to 5 Act Net addresses. Act Net devices must be addressed as follows:

- Address **1** is reserved for the built-in actuator
- Address **2** and **3** are reserved for the VAV Zone II Secondary Duct
- Address **4** and **5** for i-Vu® Smart Valves

Maximum power available for Act Net devices:

- AC supply - 25 VA (1 A)
- DC supply - 15W (0.625A)
- Use an external transformer if your devices exceed the maximum power.

CAUTIONS

- If the power source for the external Act Net devices require a connection to earth ground, you must place it in the same control panel as the TV-VVTZC-E2 controller, so that it shares a common earth ground reference, thereby reducing the potential for ground loops.
- A remote Act Net power source, installed near the Act Net devices, should be floating (no local connection to earth ground).

The TV-VVTZC-E2 provides an orange, three-pin removable screw terminal connector for the Act Net port.

Be careful to wire the Act Net port terminals on the controller to the matching terminal on the supported device. They may not be in the same order. See example below.

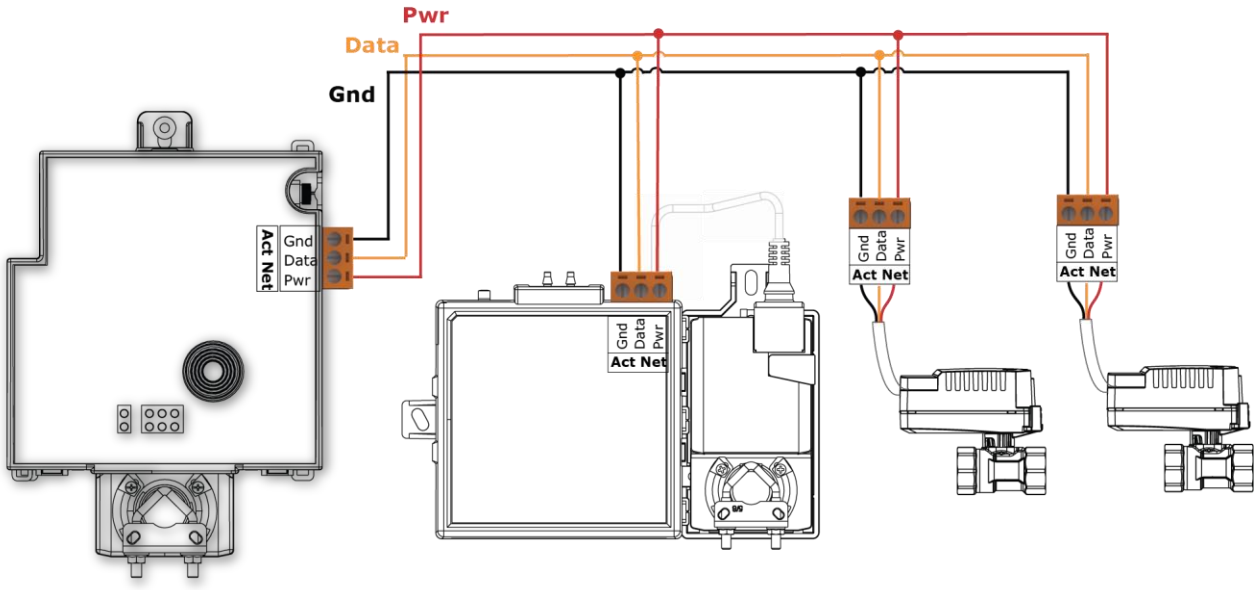

The TV-VVTZC-E2 supports Act Net communication to the Act Net devices on a bus with a maximum length of 300 feet (91.44 meters). The bus should be wired with copper conductors of an appropriate size (18 AWG or larger) to compensate for voltage drop and ensure that bus voltage does not drop below 19.2 Vac or 21.6 Vdc.

©2022 Carrier.
All rights reserved.

Wiring inputs and outputs

Inputs

The TV-VVTZC-E2 has inputs that accept the following signal types.

Signal Type	Description
Thermistor [1]	Precon Type 2 (10kOhm at 77 °F) Input voltages should be from 0.2 Vdc to 4.0 Vdc for thermistors
Dry contact	The maximum current when the contact is closed is 0.5 mA. The input voltage should be 4.1 V when the contact is open. Maximum closed contact resistance is 1kOhms.
0–5 Vdc 0–10 Vdc	The input impedance of the TV-VVTZC-E2 is approximately 120 kOhm when configured as a voltage input.
Pulse counter [2]	Pulse counting up to 10 pulses per second. Minimum pulse width (on or off time) required for each pulse is 50 msec.

[1] To use a thermistor not listed above, you can set up a *custom translation table* (page 74) for your sensor in the controller's driver.

[2] The TV-VVTZC-E2 can perform pulse counting for Dry Contact or Binary Input if you assign the input to a Pulse to Analog Input microblock. See To adjust input and output properties.

Outputs

Analog outputs

Analog outputs can be used for 0-10 Vdc devices. Resistance to the ground must be 500 Ohms minimum.

NOTE The device must share the same ground as the controller.

You can configure analog outputs in the Snap application for pulse-width modulated (PWM) control of devices, such as electrically commutated motors. When used in pulse-width mode, the output voltage is 12 Vdc and the frequency is locked at 80 Hz. To enable, use an AO microblock and select **80 Hz PWM** from the **Output Type** drop-down list.

NOTE The PWM output signal is intended to directly control the speed of an ECM-type fan, eliminating the need for an external converter board.

Binary outputs

There is one bank of relays. The bank contains 3 built-in relays with dry contacts that share a common bus input. An external voltage source must be wired to the common Bus connection for the bank of relays.

The relay can be used to switch the voltage provided on its associated bus terminal to an external device or relay. The relay can switch up to 3.75 A, 30 Vac/Vdc. The total power and current that can be switched by a bank of 3 relays cannot exceed the Class 2 limits of 100 VA or 4.2 A.

©2022 Carrier.
All rights reserved.

Wiring specifications

Input wiring

Input	Maximum length	Minimum gauge	Shielding
Thermistor Dry contact	1000 feet (305 meters)	22 AWG	Shielded
0–5 Vdc 0–10 Vdc	1000 feet (305 meters)	26 AWG	Shielded
Pulse counter TLO	1000 feet (305 meters)	22 AWG	Shielded

Output wiring

To size output wiring, consider the following:

- Total loop distance from the controller to the controlled device

  NOTE Include the total distance of actual wire. For 2-conductor wires, this is twice the cable length.
- Acceptable voltage drop in the wire from the controller to the controlled device
- Resistance (Ohms) of the chosen wire gauge
- Maximum current (Amps) the controlled device requires to operate

To wire inputs and outputs

WARNING Do not apply line voltage (mains voltage) to the controller's ports and terminals.

The Gnd terminal is shared by the inputs/outputs to the top and bottom of it.

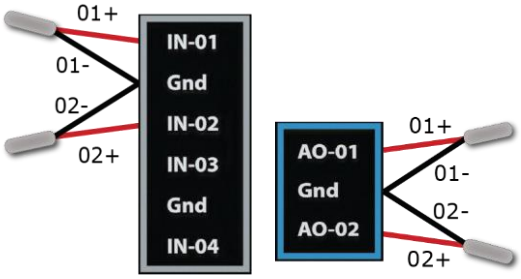

©2022 Carrier.
All rights reserved.

The TV-VVTZC-E2 has connections for one bus.

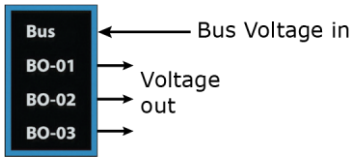

1 Verify that the TV-VVTZC-E2's power and communications connections work properly.

2 Turn **off** the TV-VVTZC-E2's power.

3 Connect the input wiring to the screw terminals on the TV-VVTZC-E2.

NOTE Connect the shield wire to the – terminal with the ground wire. Do not connect the shield wire at the other end of the cable as this will cause a ground loop error.

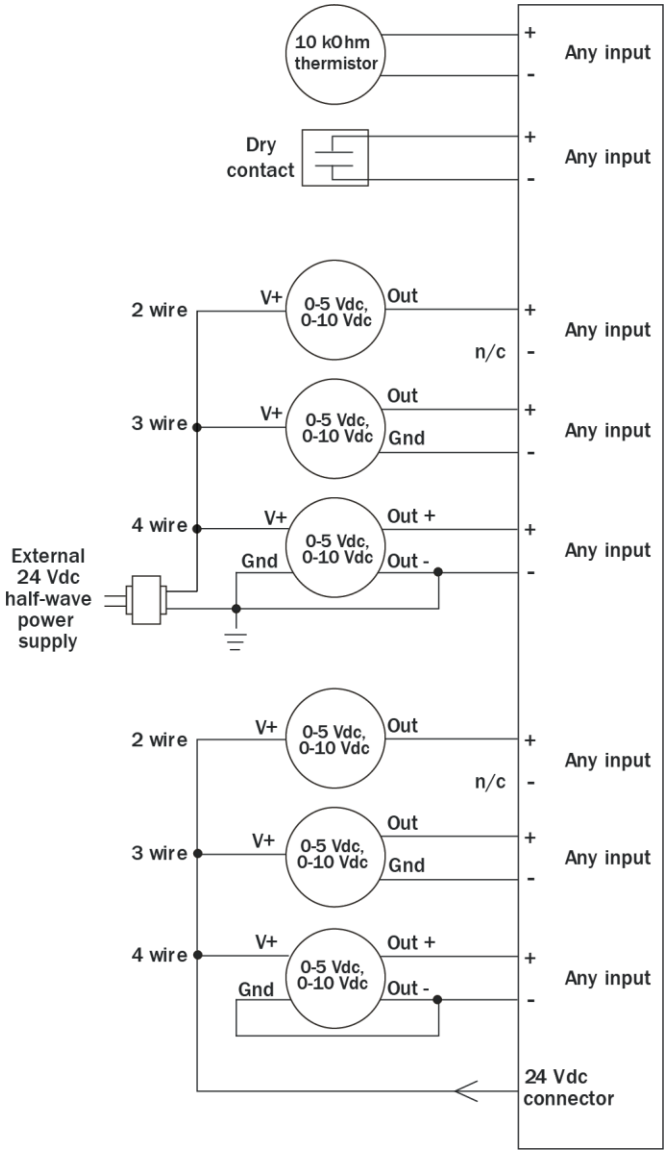

©2022 Carrier.
All rights reserved.

4 Connect binary and analog output wiring to the screw terminals on the TV-VVTZC-E2 and to the controlled device.

5 Connect the ground wire to the AO outputs' terminals.

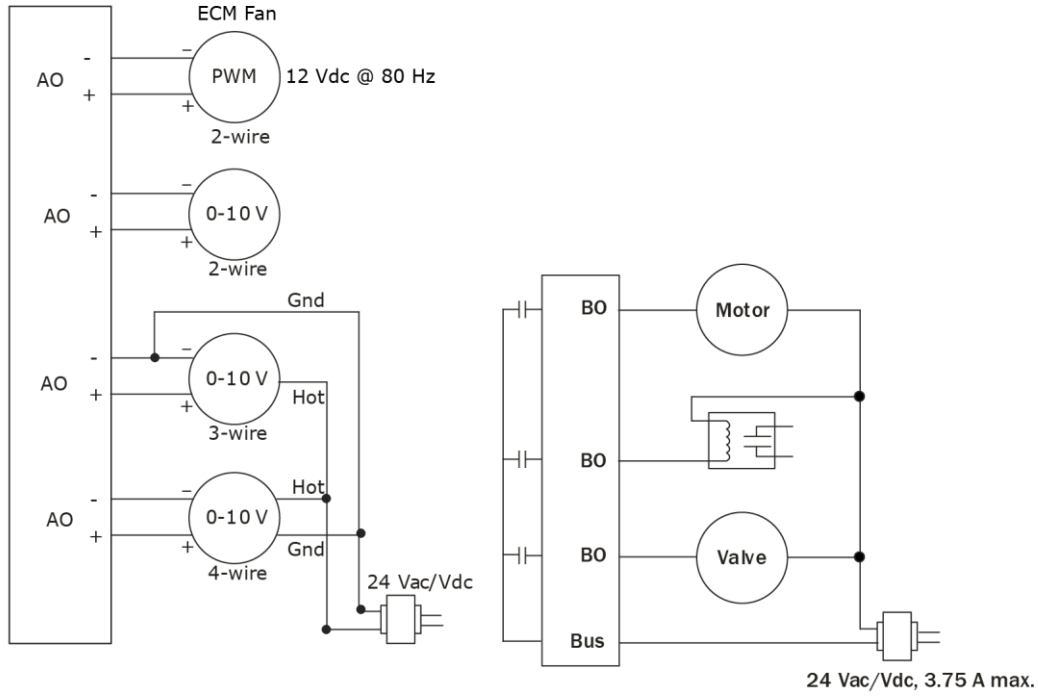

6 Turn **on** the TV-VVTZC-E2's power.

See *Troubleshooting inputs and outputs* (page 96).

©2022 Carrier.
All rights reserved.

To adjust input and output properties

An input or output must be assigned to its corresponding point in the control program. This is typically done when the control program is created, but you can adjust the settings at the time of installation in the i-Vu® interface.

1 In the i-Vu® navigation tree, select the equipment controlled by the TV-VVTZC-E2.

2 On the **Properties** page, select the **I/O Points** tab.

3 In each point's **Num** field, type the number of the controller's corresponding input or output. For example, if you use **BO-01** on the TV-VVTZC-E2 for the point **Heat Stage 1**, type `1` in the **Num** field for **Heat Stage 1**.

NOTES

- **Exp** (expander number) is **00** for the inputs and outputs located on the TV-VVTZC-E2.
- Do not assign the same output number to more than one point.

4 Enter the appropriate values for each input and output in the remaining columns. See *Input values*, *Output values*, *Resolution values* and *Offset/Polarity values* below.

5 If you have not performed the initial download to the attached controller, you must download now to verify inputs and outputs.

6 To verify each input's operation, force each sensor to a known value, then compare it to the **Value** shown on the **Properties** page on the **I/O Points** tab.

7 To verify each output's operation, lock each output to a known condition on the **I/O Points** tab, then verify that the equipment operates correctly.

See *Troubleshooting inputs and outputs* (page 96).

©2022 Carrier.
All rights reserved.

Input values

Input	I/O Type	Sensor/Actuator Type	Min/Max
Analog (BAI)			
0-5 Vdc	**0–5 Volt**	**Linear Full Range**	Engineering values associated with 0 Vdc (Min) and 5 Vdc (Max) [1]
		No Translation	N/A. The input microblock's value will be the raw voltage of the input.
0-10 Vdc	**0–10 Volt**	**Linear Full Range**	Engineering values associated with 0 Vdc (Min) and 10 Vdc (Max)
		No Translation	N/A. The input microblock's value will be the raw voltage of the input.
2-10 Vdc	**0–10 Volt**	**Linear w/Offset, 2–10 Volts**	Engineering values associated with 2 Vdc (Min) and 10 Vdc (Max)
Thermistor	**Thermistor**	Select your Thermistor type or set up and select a **Non-Linear, Custom Table** [2]	N/A
Pulse to Analog (BPTA) [3]			
Pulse Counter	**Dry Contact or Binary Input**	N/A	N/A
Binary (BBI)			
Dry Contact	**Dry Contact**	N/A	N/A
Binary Contact	Binary Contact	N/A	N/A
Special (BI)[4]			
Binary	Special	Online flow sensor status	N/A

[1] The sensor reads a value and sends a corresponding signal (Volts) to the TV-VVTZC-E2's physical input. The Analog Input microblock uses the Min and Max values to linearly translate the signal into the engineering value used in subsequent control logic.

[2] You can set up a *custom translation table* (page 74) on the driver's Custom Translation Tables pages in the i-Vu® interface.

[3] The control program must have one Pulse to Analog Input microblock for each pulse counting input.

[4] The special binary input indicates a communication loss to the airflow sensor. You can use this in your control program to select the actuator movement in the case of flow sensor fault. Sensor reconnection is detected automatically and a power cycle is not required. In the microblock popup, under **Hardware Configuration**, set **Expander** to **0**, **Input Number** to **110**, and **I/O Type** to **Special**. To detect a flow sensor fault on the ZASF-A, use **Input Number 111**.

©2022 Carrier.
All rights reserved.

Output values

Output	I/O Type	Sensor/Actuator Type	Min/Max
Analog (BAO)			
0-10 Vdc	**Electrical 0–10 Volt**	**Linear Full Range**	Engineering values associated with 0 Vdc (Min) and 10 Vdc (Max) [1]
		No Translation	N/A. The Analog Output microblock will output the same value that comes in to the microblock.
2-10 Vdc	**Electrical 0–10 Volt**	**Linear w/Offset, 2–10 Volts**	Engineering values associated with 2 Vdc (Min) and 10 Vdc (Max) [1]
12 Vdc PWM	**PWM 80 Hz**	**No Translation**	0% (Min) and 100% (Max). The Analog Output microblock varies the width of the pulse based on the value that the microblock receives.
Binary (BBO)			
Relay	**Relay/Triac Output**	N/A	N/A

[1] The Analog Output microblock uses the Min and Max values to linearly translate its incoming value into a physical output signal (Volts) sent from the TV-VVTZC-E2 to a device. For example, set Min to 0 and Max to 100 for an Analog Output microblock that receives a 0 to 100% open signal from a PID microblock and that controls a 0–10 Vdc actuator so that when the PID signal is 100%, the TV-VVTZC-E2 output is 10 Vdc. Similarly, when the PID signal is 50%, the TV-VVTZC-E2 output is 5 Vdc.

Resolution values

Resolution is not particular to a type of input or output, but the driver handles analog and binary inputs and outputs differently. To set these values appropriately, you should understand how the driver uses them.

Resolution	Notes
Analog Input (BAI)	The driver rounds the microblock's present value according to the resolution. **EXAMPLE** If the calculated present value is 13.789 and you set the **Resolution** to 0.1, the control program uses 13.8 for any calculations downstream from the microblock.
Analog Output (BAO)	The driver rounds the wire input value to the microblock before performing any scaling calculations. **EXAMPLE** If the wire input value is 13.789 and you set the **Resolution** to 0.1, the microblock uses 13.8 for any scaling calculations.

©2022 Carrier.
All rights reserved.

Offset/Polarity values

Offset/Polarity is not particular to a type of input or output, but the driver handles analog and binary inputs and outputs differently. To set these values appropriately, you should understand how the driver uses them.

Offset/Polarity	Notes
Analog Input (BAI)	**Offset** value (positive or negative) adds a fine adjustment to a sensor reading after all scaling for calibration. **EXAMPLE** If a sensor reads 74.9°F when the actual measured value is 73.6°F, enter an **Offset** of `-1.3` to calibrate the sensor to the measured value.
Analog Output (BAO)	You can use the **Offset** value (positive or negative) to calibrate an output, but you generally do not need to. If used, the driver adds the offset value to the wire input value before performing any scaling calculations to determine the TV-VVTZC-E2's output.
Binary Input (BBI)	**Polarity** determines the microblock's present value when no signal is received from the equipment. When no signal is received from the equipment, if **Polarity** is set to: **normal**—present value is **off** **reversed**—present value is **on**
Binary Output (BBO)	**Polarity** determines the TV-VVTZC-E2's output based on the control program's signal to the microblock. When the control program's signal to the microblock is **on**, if **Polarity** is set to: **normal**—output is **on** **reversed**—output is **off** **NOTE** Regardless of **Polarity**, the output will be off if the TV-VVTZC-E2 loses power.

©2022 Carrier.
All rights reserved.

Wiring sensors to the TV-VVTZC-E2's inputs

You can wire the following sensors to the TV-VVTZC-E2's inputs:

- *Alternate space temperature sensor* (page 33)
- *Supply Air Temperature sensor* (page 33)
- *Duct Air Temperature sensor* (page 34)
- *CO_2 sensor* (page 34)
- *Relative Humidity sensor* (page 37)
- *Remote occupancy contact sensor* (page 38)

NOTE This document gives instructions for wiring the sensors to the TV-VVTZC-E2. For detailed installation instructions, see the device's *Installation Guide*.

WARNING Disconnect electrical power to the TV-VVTZC-E2 before wiring it. Failure to follow this warning could cause electrical shock, personal injury, or damage to the controller.

CAUTION

- Do not run sensor or relay wires in the same conduit or raceway with Class 1 AC or DC service wiring.
- Do not abrade, cut, or nick the outer jacket of the cable.
- Do not pull or draw cable with a force that may harm the physical or electrical properties.
- Avoid splices in any control wiring.

Wiring specifications

Cable from sensor to controller:	If <100 ft (30.5 meters) If >100 ft (30.5 meters)	22 AWG, unshielded 22 AWG, shielded
Maximum length:	500 feet (152 meters)	

©2022 Carrier.
All rights reserved.

To wire the T55 sensor to the controller

Part #33ZCT55SPT

This wall-mounted sensor monitors space temperature and can be used instead of a ZS or wireless sensors.

1 Strip the outer jacket from the cable for at least 3 inches (7.62 cm). Strip .25 inch (.6 cm) of insulation from each wire. Cut the shield and drain wire from the cable.

2 Wire the sensor to the controller, attaching the red wire to the **IN-02** terminal and the black wire to the **Gnd** terminal. See diagram below.

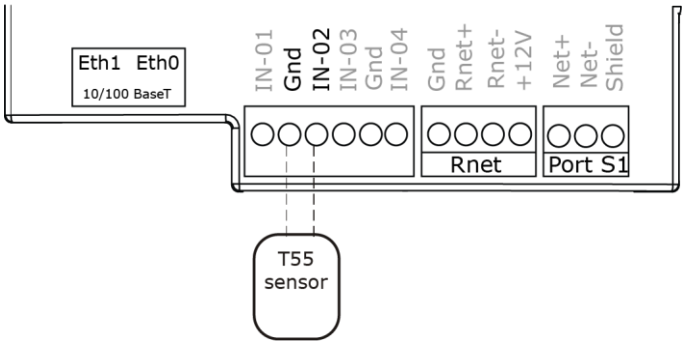

To wire the Supply Air Temperature sensor to the controller

Part #33ZCSENSAT

Each TV-VVTZC-E2 requires that a temperature sensor be installed in the supply air stream. Mount the SAT sensor at least 2 feet downstream from a hot water or steam coil, or at least 4 feet downstream from an electric heating coil.

Wire the sensor to the controller. See diagram below.

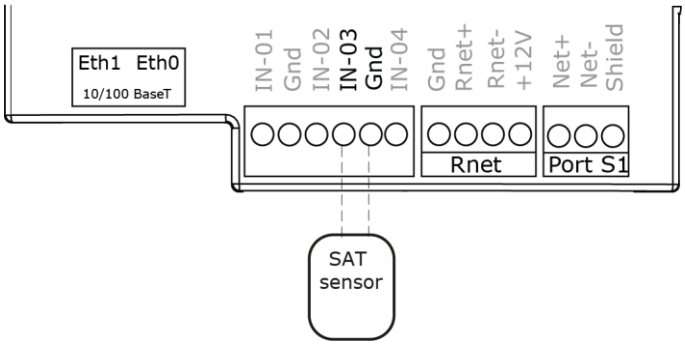

©2022 Carrier.
All rights reserved.

To wire and mount the DAT sensor

1 Wire the sensor to the controller's **IN-03** and **Gnd** terminal. See diagram below.

NOTE Sensor wiring does not have polarity. The wires can be connected to either terminal.

2 Using electrical tape, insulate any exposed wire to prevent shorting.

3 Connect shield to earth ground (if using shielded wire to extend cable length).

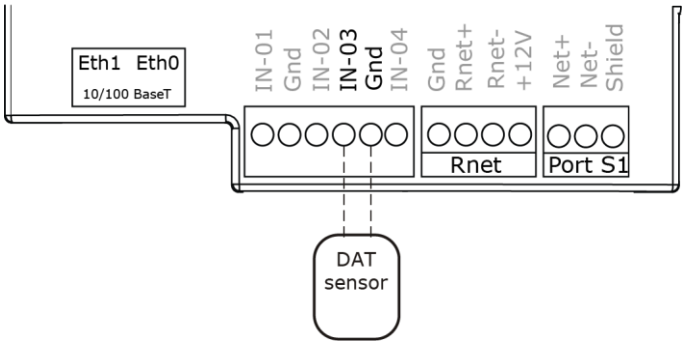

To wire the CO2 sensor to the controller

Part #33ZCSPTCO2LCD-01 (Display model)
Part #33ZCSPTCO2-01 (No display)
Part #33ZCT55CO2 (No display)

A CO_2 sensor monitors carbon dioxide levels. As CO_2 levels increase in a linked system, IAQ is provided to the air source. These sensors also monitor temperature using a 10K thermistor.

A CO_2 sensor can be wall-mounted or mounted in a return air duct. (Duct installation requires an Aspirator Box Accessory - Part #33ZCASPCO2.)

The sensor has a range of 0–2000 ppm and a linear 4-20 mA output. This is converted to 1-5 Vdc by a 250 Ohm, 1/4 watt, 2% tolerance resistor connected across the zone controller's CO_2 input terminals.

NOTE Do not use a relative humidity sensor and CO_2 sensor on the same zone controller.

©2022 Carrier.
All rights reserved.

#33ZCSPTCO2

1 Wire the sensor to the controller. See appropriate diagram below.

2 Verify the **J7** jumper on the sensor is set to **0-5 Vdc**.

Wiring diagram for #33ZCSPTCO2:

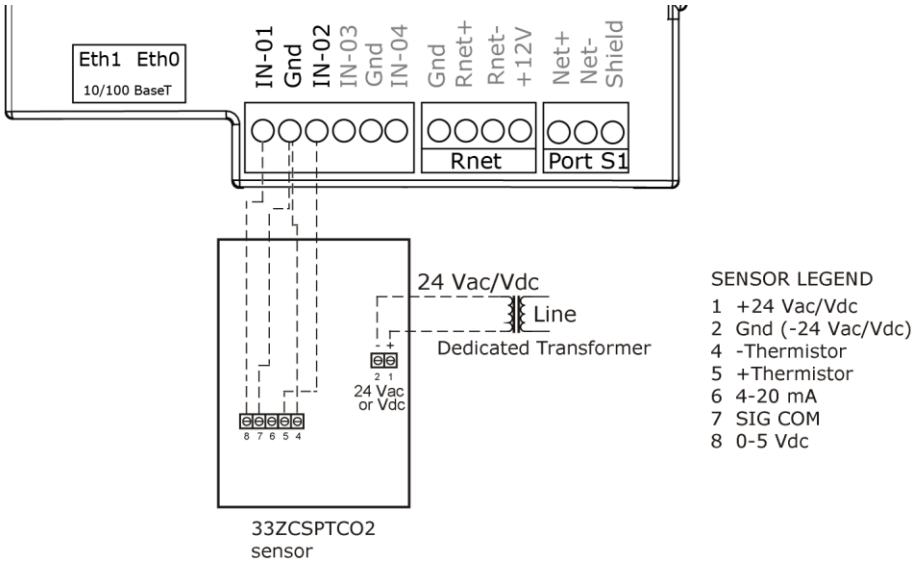

©2022 Carrier.
All rights reserved.

#33ZCT55CO2

1 Wire the sensor to the controller. See appropriate diagram below.

2 Install a field supplied 250 Ohm 1/4 watt 2% tolerance resistor across the controller's **IN-01** and **Gnd** terminals.

Wiring diagram for #33ZCT55CO2:

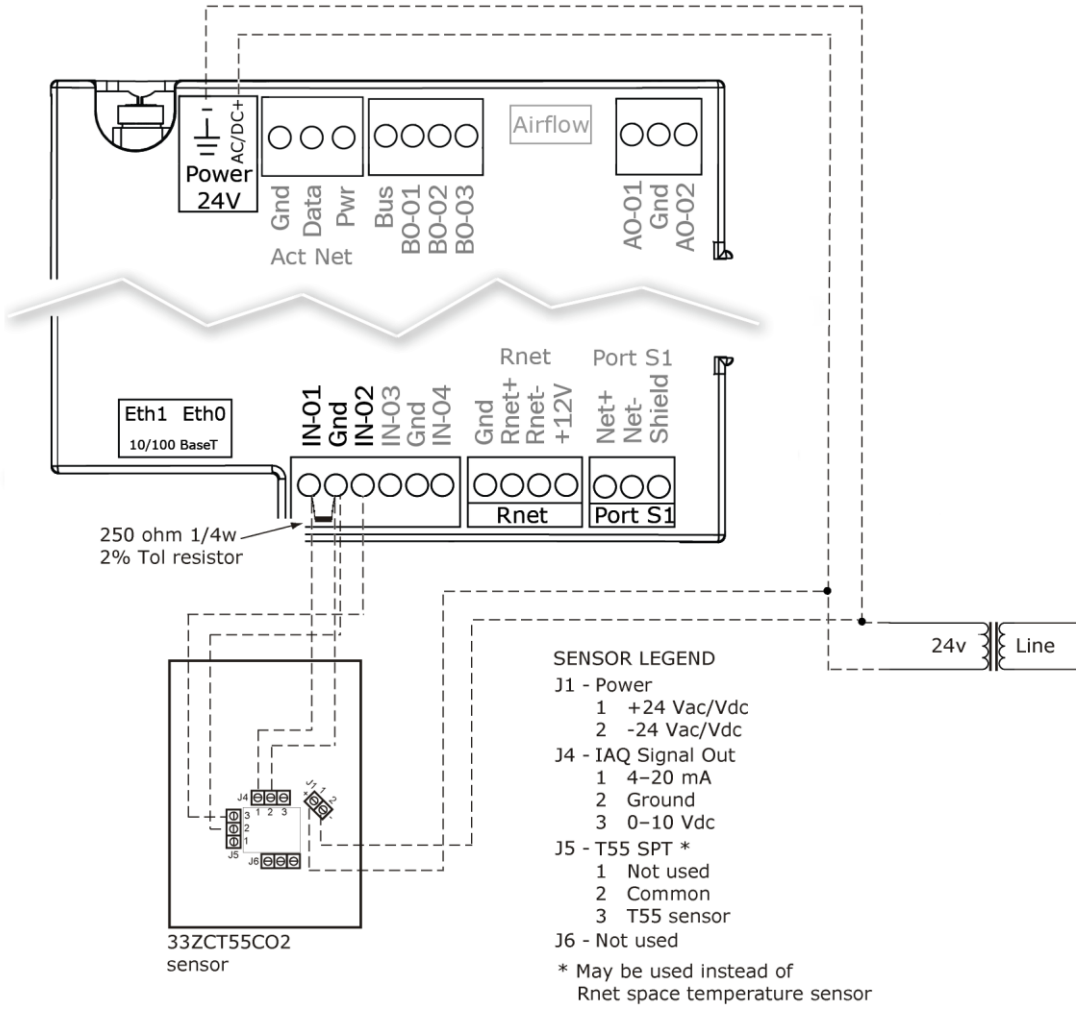

©2022 Carrier.
All rights reserved.

To wire the Relative Humidity sensor to the controller

Part #33ZCSENSRH-02

The Relative Humidity (RH) sensor is used for zone humidity control (dehumidification) if the rooftop unit has a dehumidification device. If not, the sensor only monitors humidity.

NOTE Do not use a relative humidity sensor and CO_2 sensor on the same zone controller.

1. Strip the outer jacket from the cable for at least 4 inches (10.2 cm). Strip .25 inch (.6 cm) of insulation from each wire.
2. Wire the sensor to the controller. See diagram below.
3. Using electrical tape, insulate any exposed resistor lead to prevent shorting.
4. Set **SW3** on the sensor as shown below.

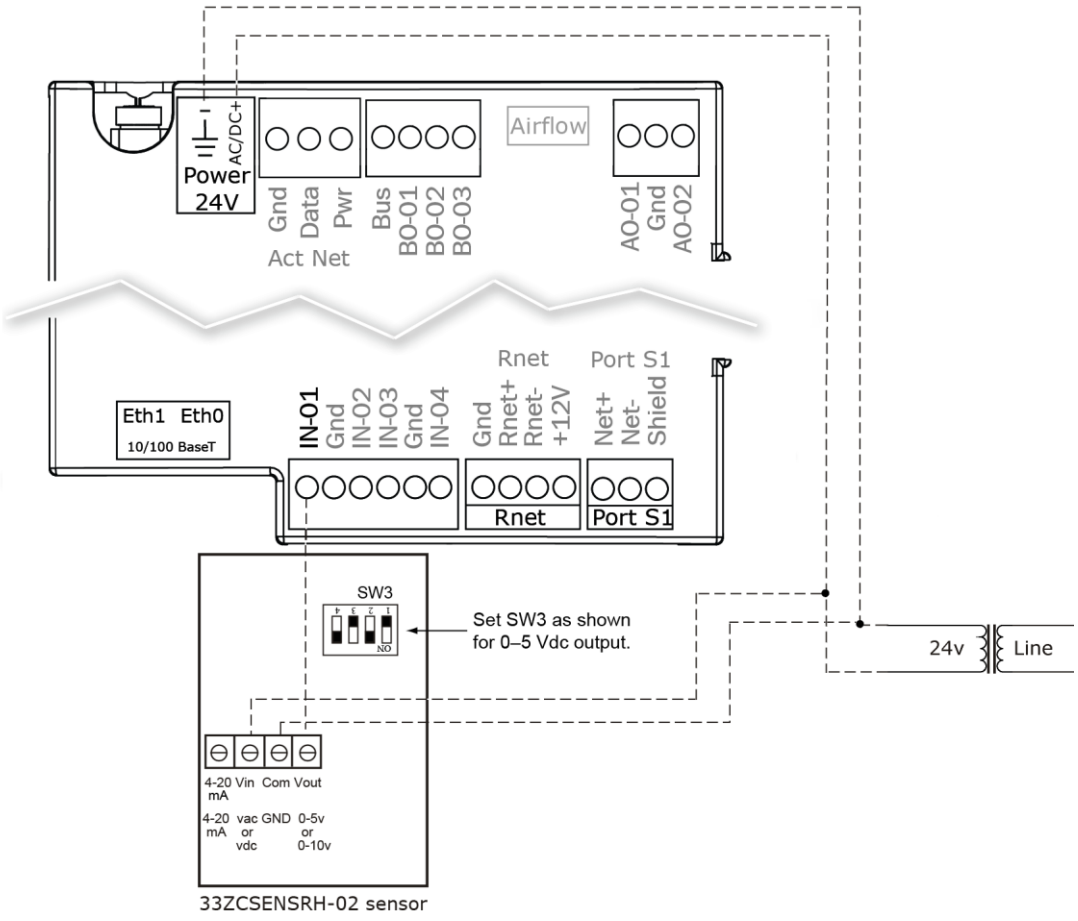

©2022 Carrier.
All rights reserved.

Wiring a remote occupancy sensor

You can wire a normally open or normally closed dry-contact occupancy sensor to the TV-VVTZC-E2's **IN-04** input and **Gnd** terminals as shown below. The controller supplies the voltage needed for the input.

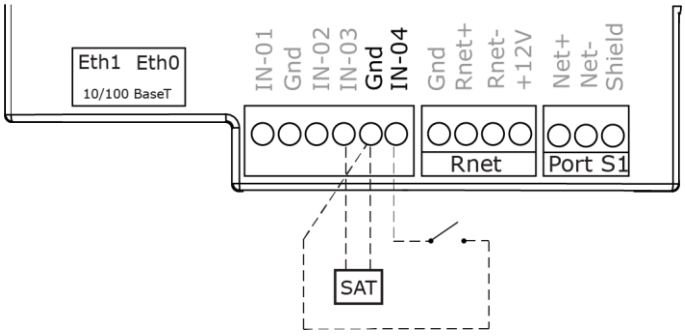

Wiring equipment to outputs

Use the following wiring diagrams to wire zone terminal equipment to the TV-VVTZC-E2's outputs.

Single duct

Single duct 2-position hot water

Single duct modulating hot water

Single duct SCR electric heat

Single duct combination baseboard and ducted heat

Single duct staged electric heat

Fan box 2-position hot water

Fan box modulating hot water

Fan box SCR electric heat

Fan box combination base board and ducted heat

Fan box 2-stage electric heat

Wiring field-supplied actuators to the analog output (page 50)

WARNING Disconnect electrical power to the TV-VVTZC-E2 before wiring it. Failure to follow this warning could cause electrical shock, personal injury, or damage to the controller.

©2022 Carrier.
All rights reserved.

Wiring specifications

To size output wiring, consider the following:

- Total loop distance from the power supply to the controller, and then to the controlled device

  NOTE Include the total distance of actual wire. For 2-conductor wires, this is twice the cable length.
- Acceptable voltage drop in the wire from the controller to the controlled device
- Resistance (Ohms) of the chosen wire gauge
- Maximum current (Amps) the controlled device requires to operate

Wiring diagram legend

Gnd	=	Ground
HWV	=	Hot water valve
SAT	=	Supply air temperature sensor
SCR	=	Silicon controlled rectifier
Space temp sensor	=	ZS sensors or Wireless Adapter for wireless sensors
T55 (OPT)	=	Alternate space temperature sensor
– – –		Field-supplied wiring

©2022 Carrier.
All rights reserved.

Single duct only

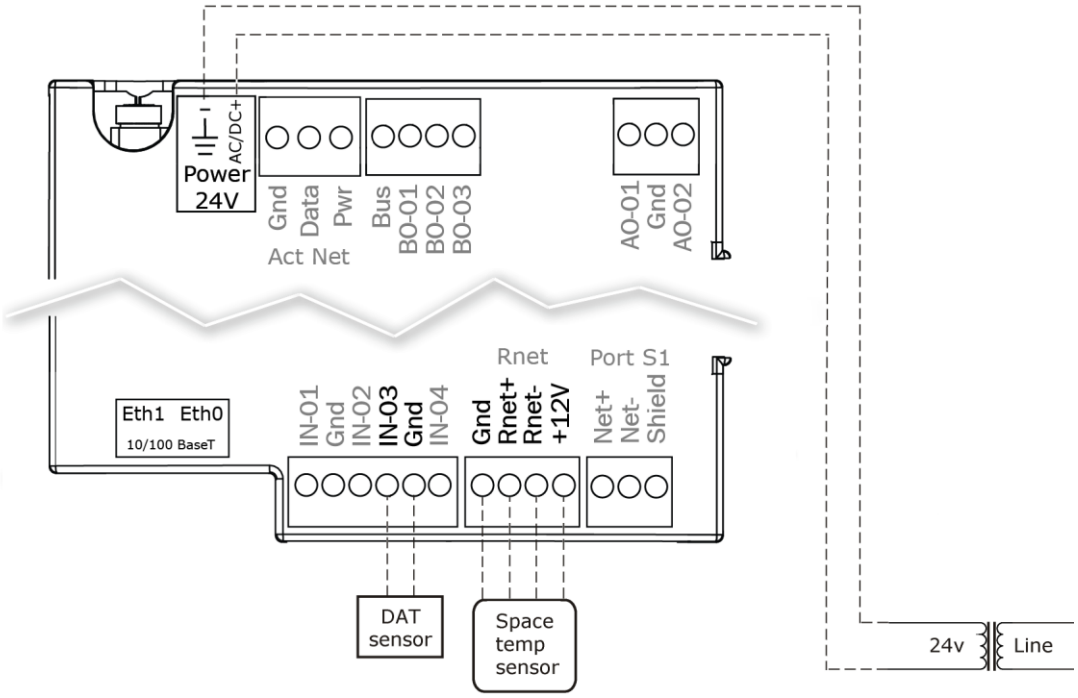

©2022 Carrier.
All rights reserved.

Single duct 2-position hot water

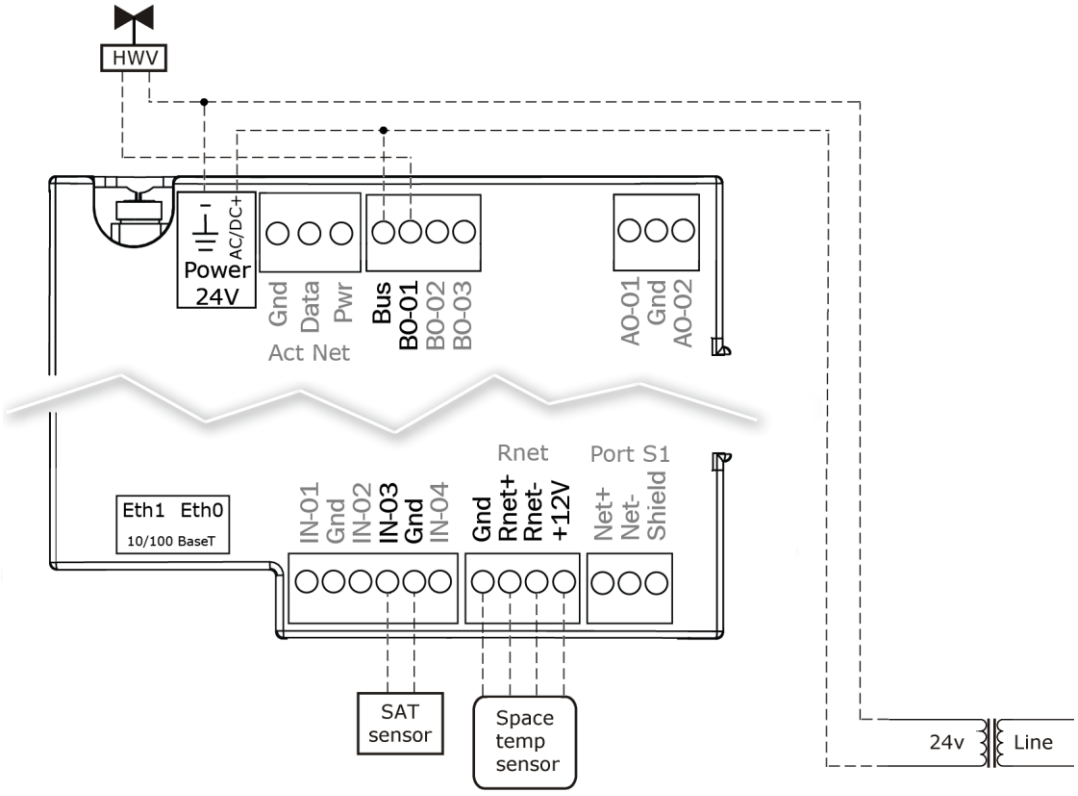

©2022 Carrier.
All rights reserved.

Single duct modulating hot water

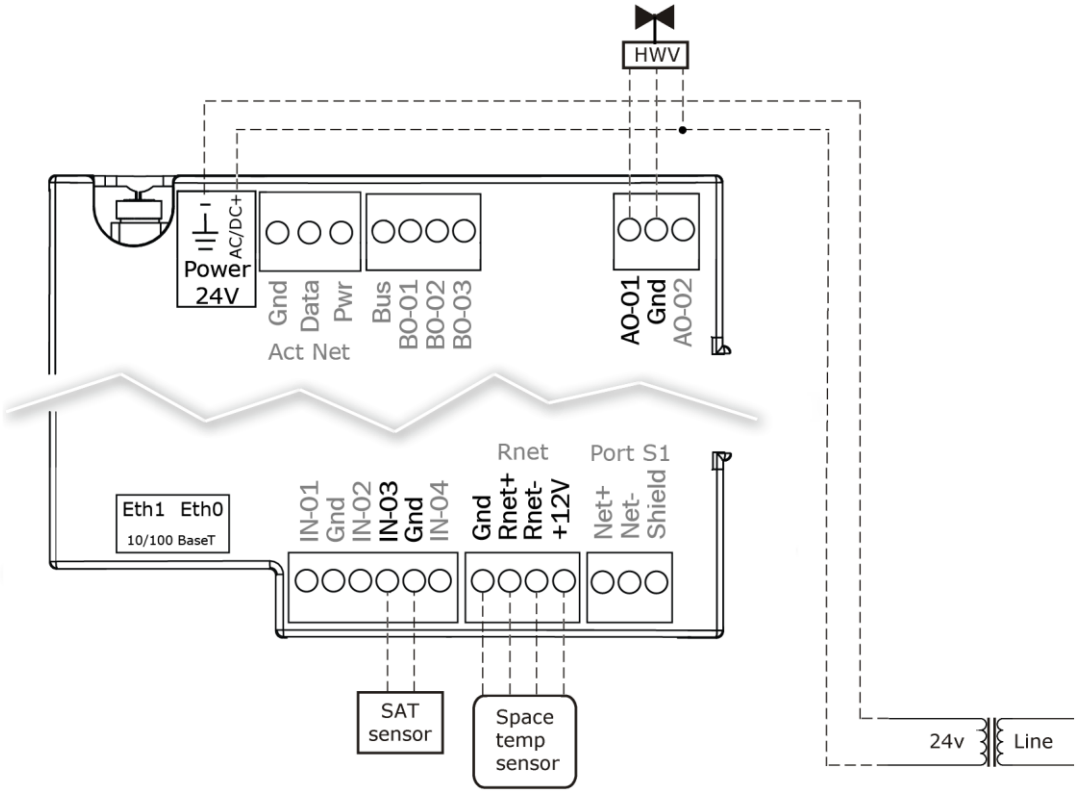

©2022 Carrier.
All rights reserved.

Single duct SCR electric heat

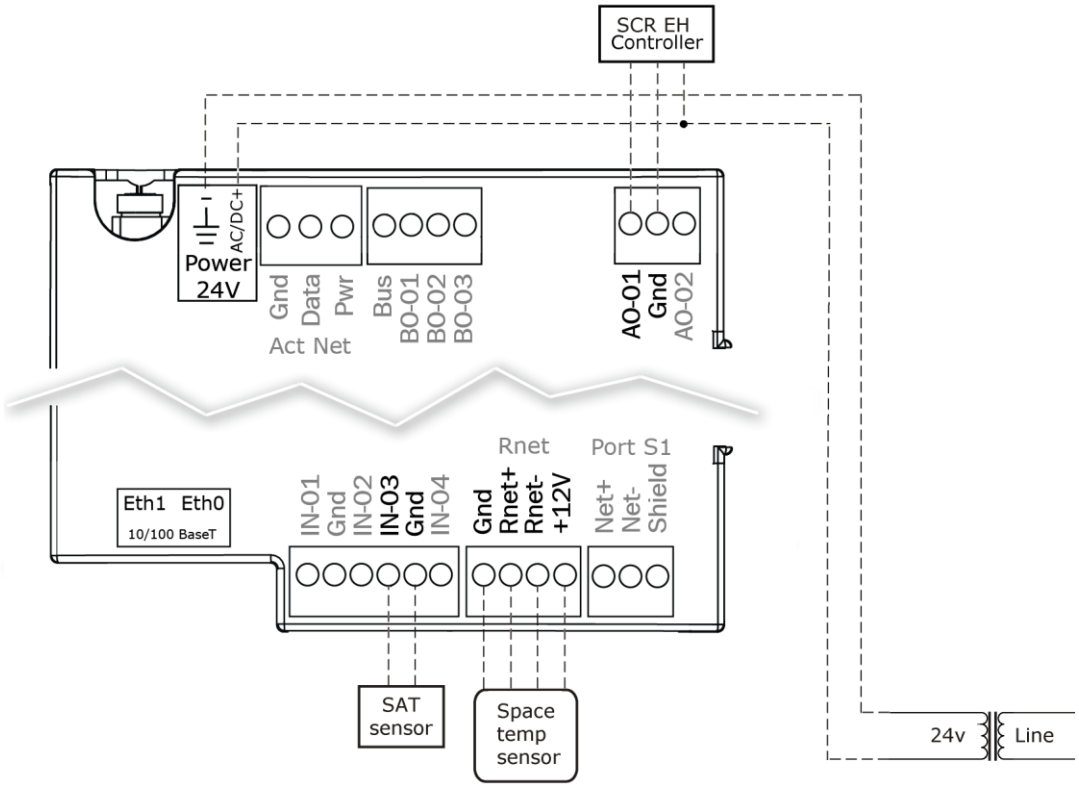

©2022 Carrier.
All rights reserved.

Single duct combination baseboard and ducted heat

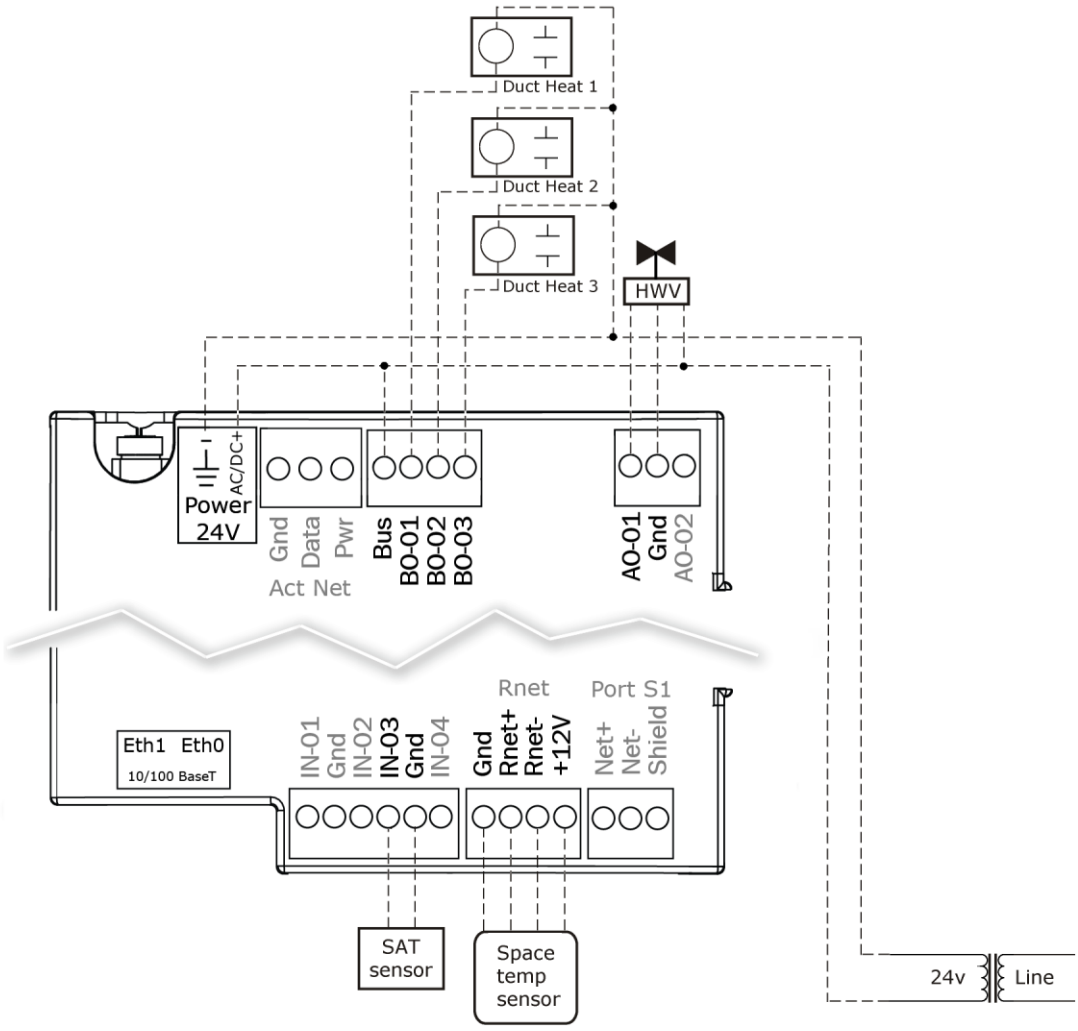

©2022 Carrier.
All rights reserved.

Single duct staged electric heat

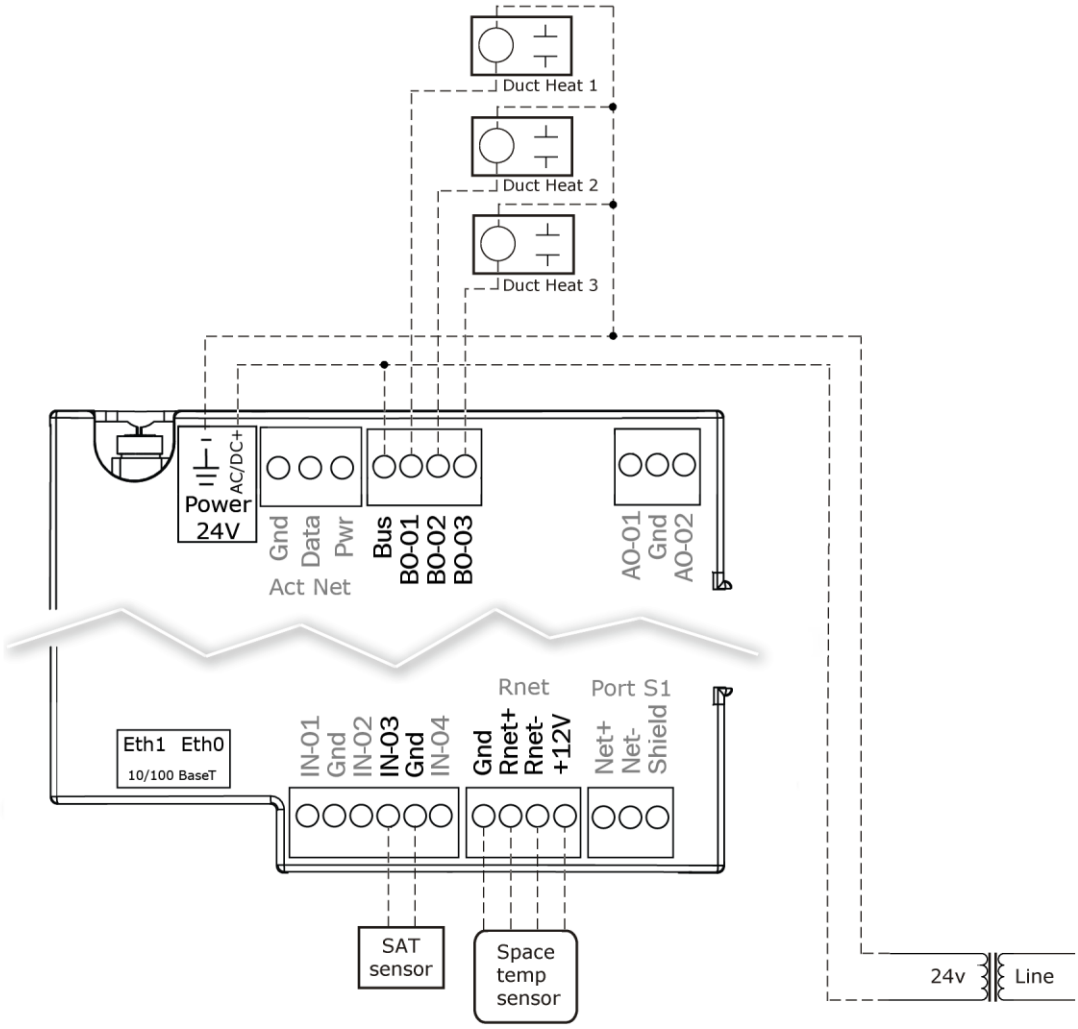

©2022 Carrier.
All rights reserved.

Fan box 2-position hot water

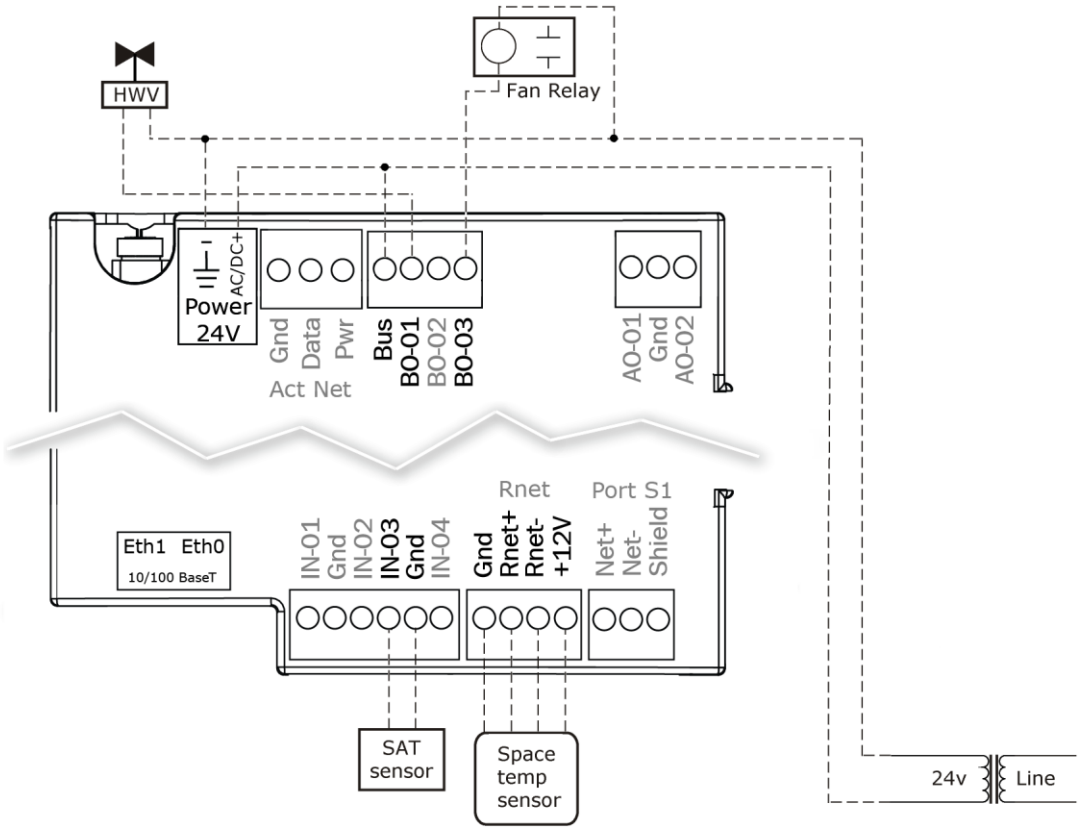

©2022 Carrier.
All rights reserved.

Fan box modulating hot water - ducted or baseboard

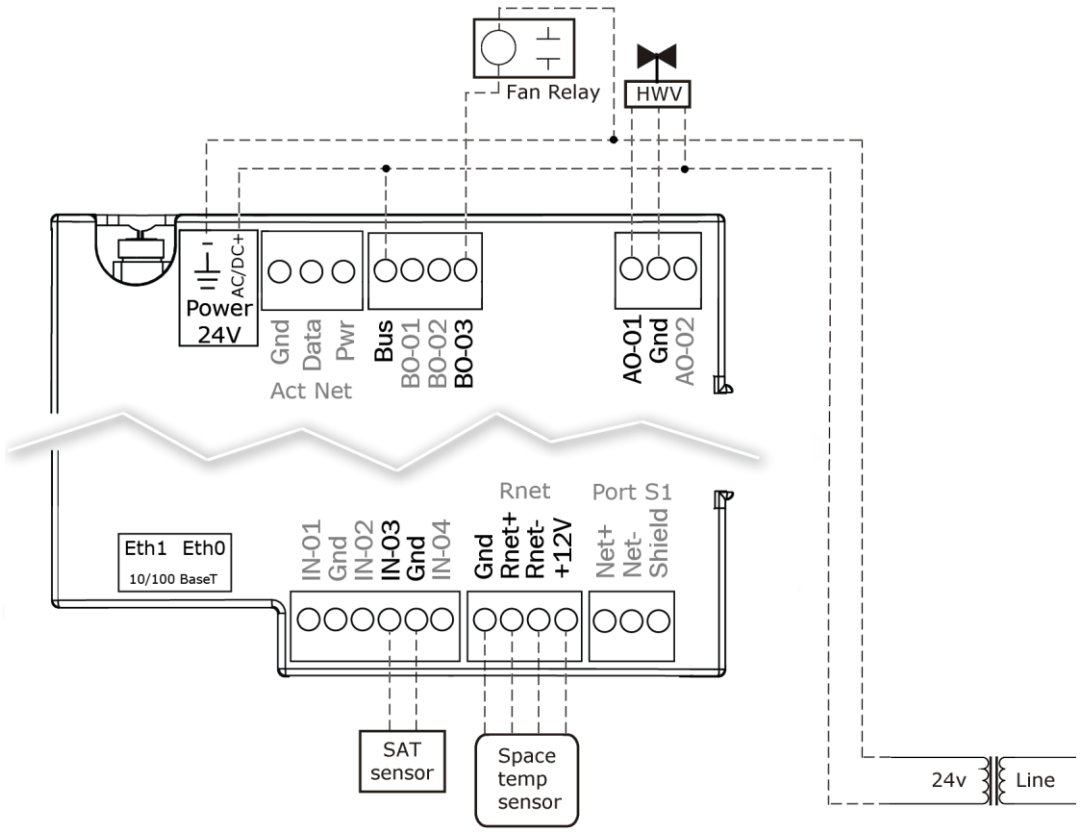

©2022 Carrier.
All rights reserved.

Fan box SCR electric heat

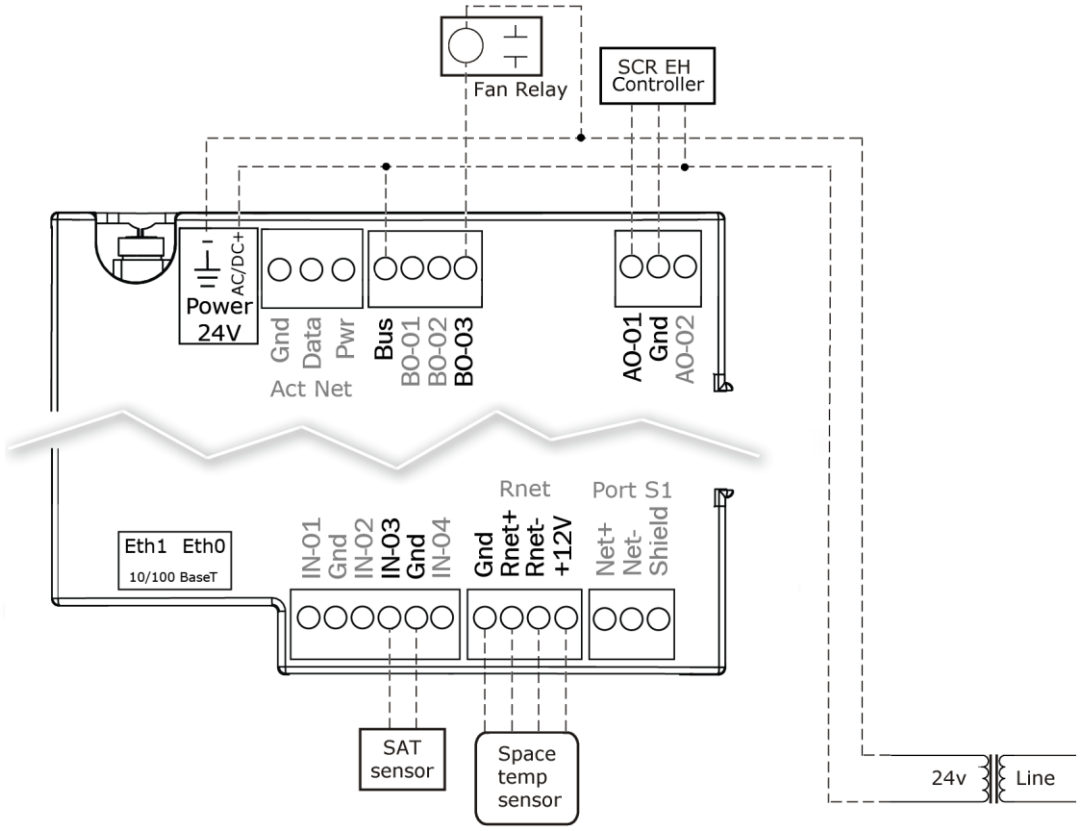

©2022 Carrier.
All rights reserved.

Fan box combination baseboard and ducted heat

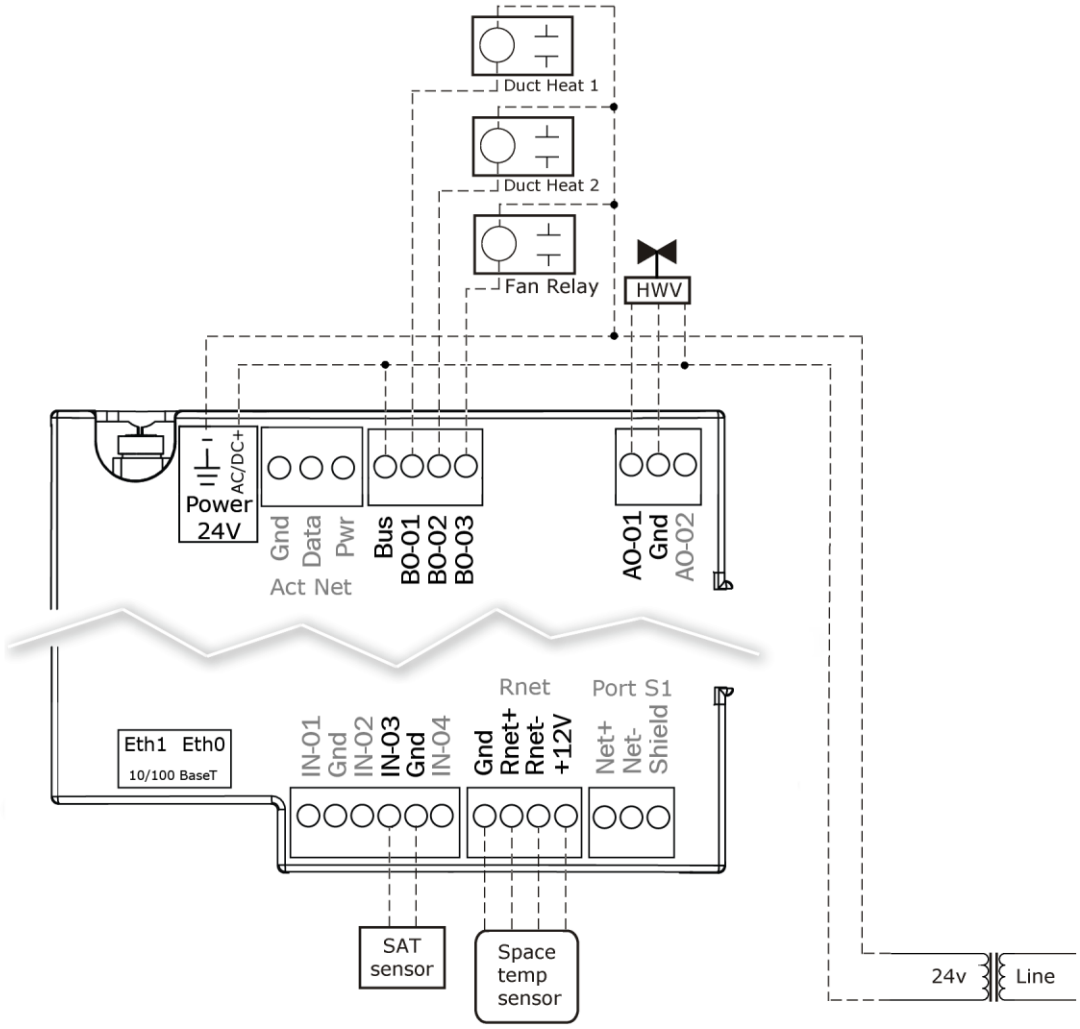

©2022 Carrier.
All rights reserved.

Fan box 2-stage electric heat

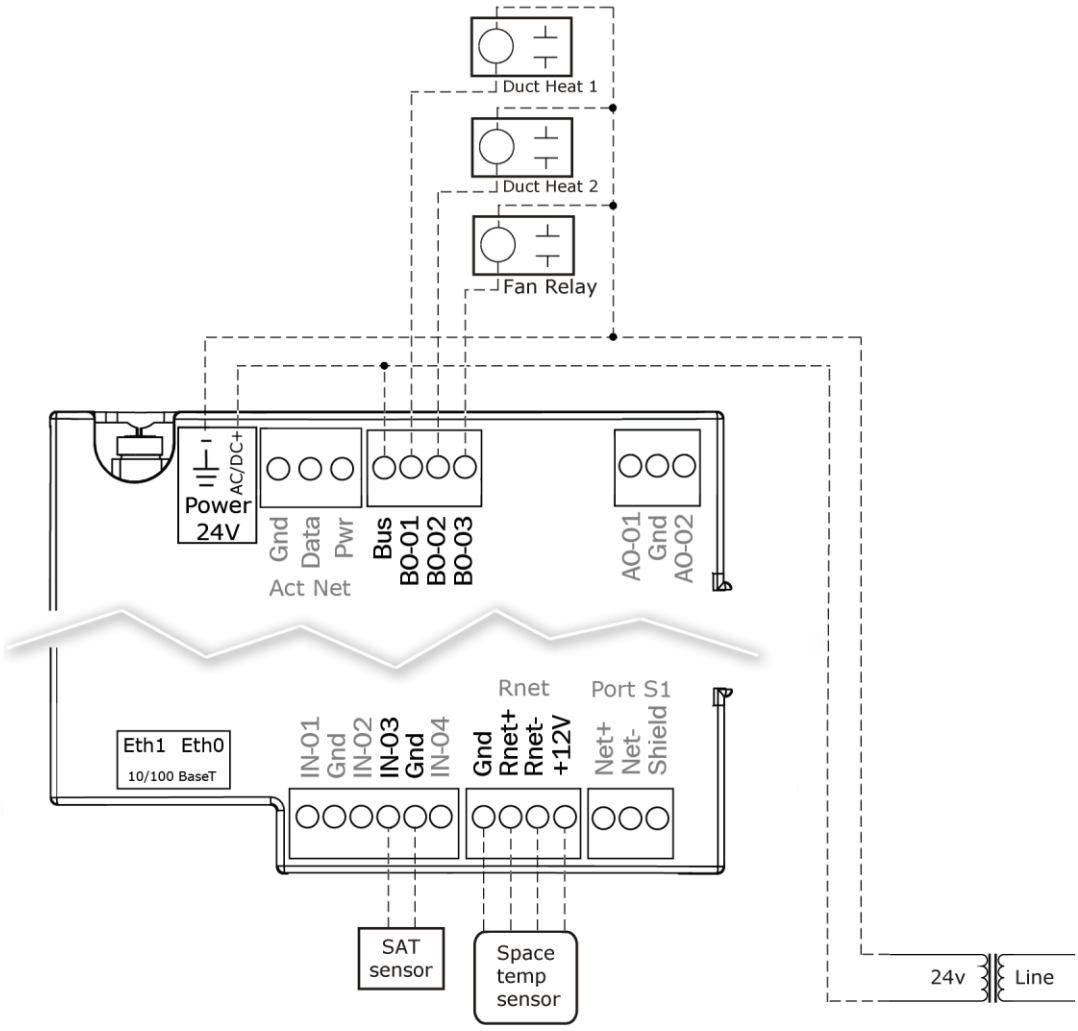

Wiring field-supplied actuators to the analog output

You can wire a high-torque actuator or parallel actuators to the controller's 0–10 Vdc analog output.

High-torque actuator

You can wire one of the following Belimo actuators to the TV-VVTZC-E2's analog output instead of using the controller's built-in, 45 in.-lb (4 Nm) actuator.

NMX24-MFT P-10028	90 in.-lb (10 Nm) actuator with 0–10 Vdc control and 0–10 Vdc feedback
AMX24-MFT P-10028	180 in.-lb (20 Nm) actuator with 0–10 Vdc control and 0–10 Vdc feedback

©2022 Carrier.
All rights reserved.

1 Install the actuator according to the manufacturer's instructions.

2 Wire the actuator to the controller using the diagram below.

NOTE For proper operation and to prevent damage to the devices, use the same polarity for the actuator's power and the TV-VVTZC-E2's power.

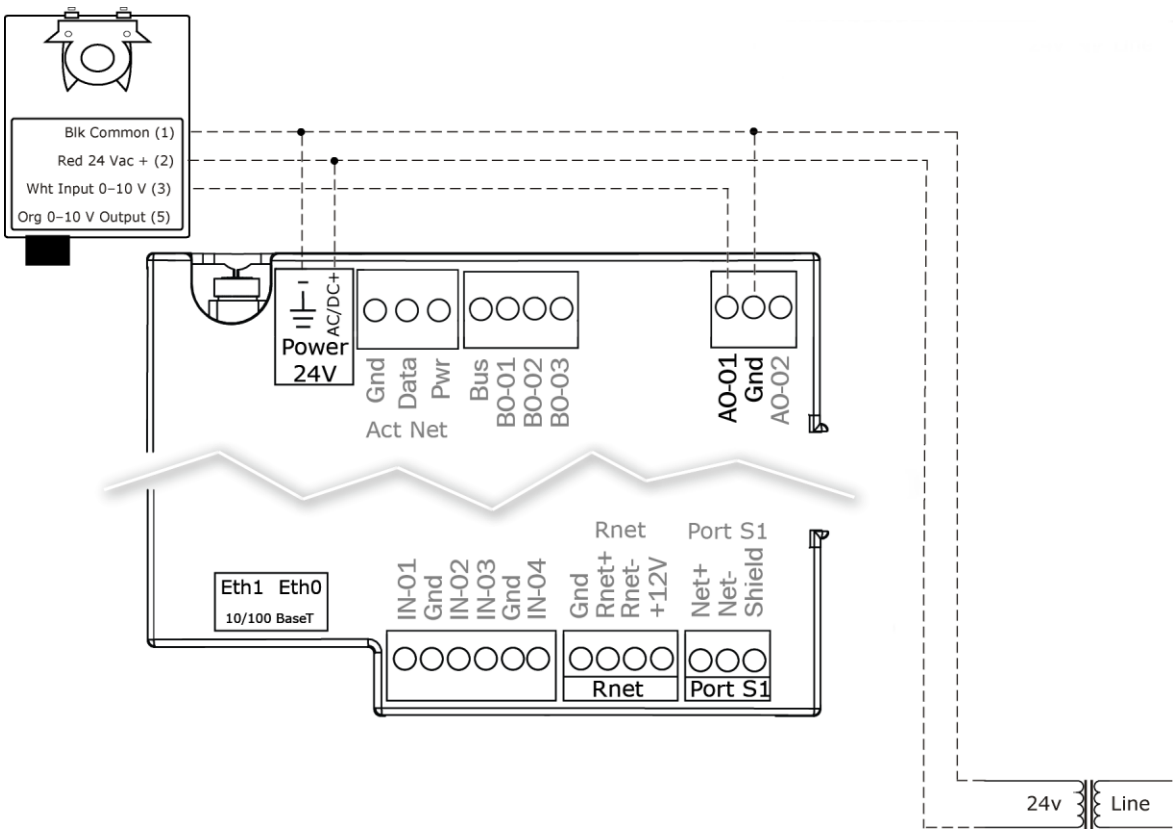

Linked actuators

You can wire up to 4 of the following Belimo actuators to the TV-VVTZC-E2's analog output. Use like actuators so that travel times and other parameters coincide.

LMX24-MFT P-10028	45 in.-lb (5 Nm) actuator with 0–10 Vdc control
NMX24-MFT P-10028	90 in.-lb (10 Nm) actuator with 0–10 Vdc control
AMX24-MFT P-10028	180 in.-lb (20 Nm) actuator with 0–10 Vdc control

1 Install the actuators according to the manufacturer's instructions.

2 Wire the actuators to the controller using the diagram below.

3 Set the direction rotation switch on each actuator to CW.

IMPORTANT! If slaving 45° actuators, you must go to **Properties** > **I/O Points** > **Hot Water Valve Max** and change scaling to **200** for the slave actuator to correctly track the primary actuator.

©2022 Carrier.
All rights reserved.

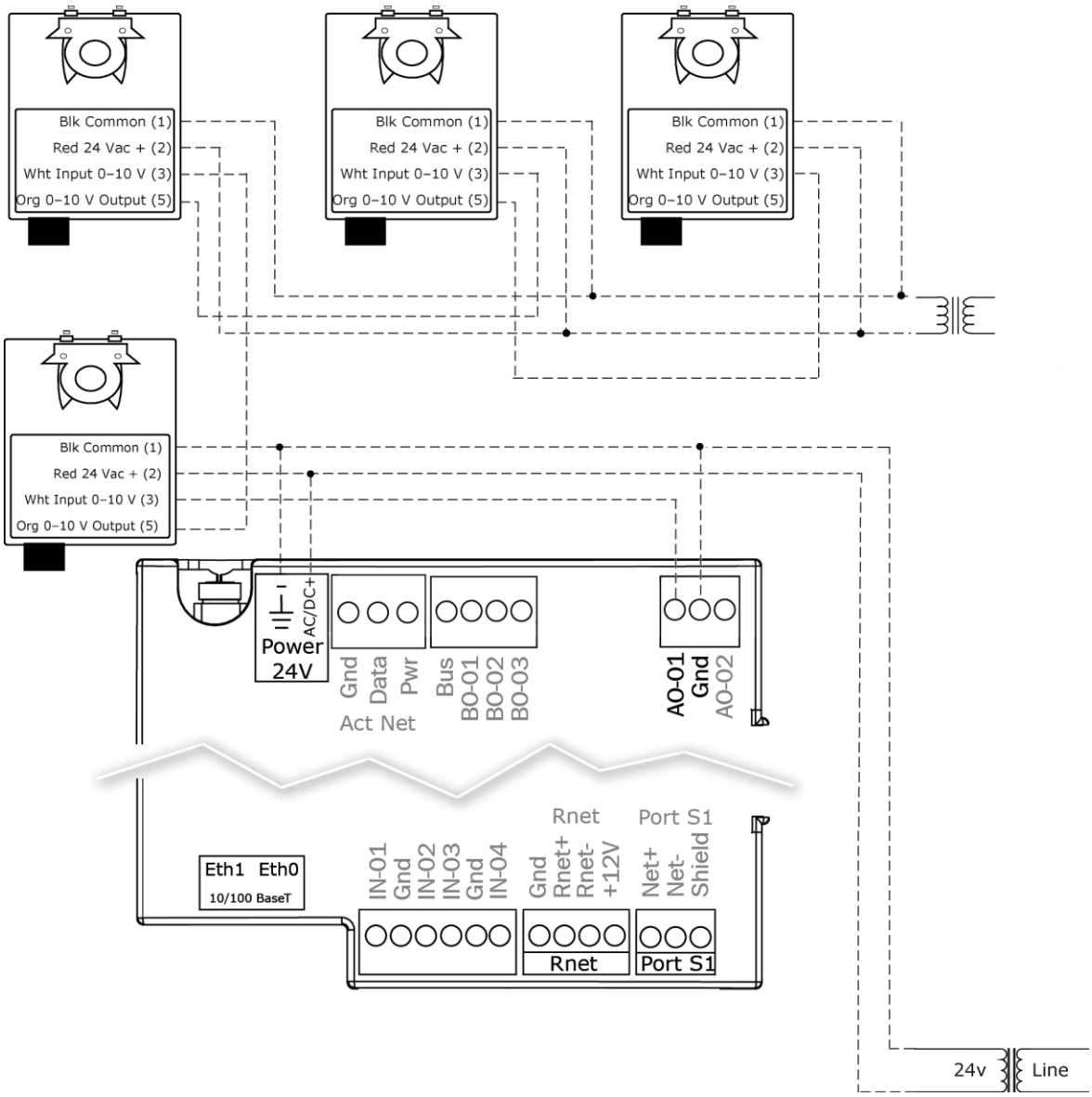

NOTE Maintain polarity if using the same power supply for more than one actuator.

©2022 Carrier.
All rights reserved.

Start-up

Use one of the following interfaces to start up, access information, read sensor values, and test the controller.

This interface...	Provides a...
Field Assistant application - Runs on a laptop that connects to controller's Local Access port [1]	Temporary interface
Equipment Touch device - Connects to controller's Rnet port [2]	Temporary or permanent interface
TruVu™ ET Display device - Connects to controller's Rnet port [3]	
i-Vu® application Available for BACnet systems only	Permanent interface
System Touch device Available only for BACnet MS/TP systems. Wire to a BACnet MS/TP network connector and a 24 Vac power supply [4]	Temporary or permanent interface

[1] Requires a USB Link (Part #USB-L).
[2] See the *Equipment Touch Installation and Setup Guide* for detailed instructions.
[3] See the *TruVu™ ET Display (part# EQT2) Installation and Setup Guide* for detailed instructions.
[4] See the *System Touch Installation and Setup Guide* for detailed instructions.

CAUTION If multiple controllers share power but polarity was not maintained when they were wired, the difference between the controller's ground and the computer's AC power ground could damage the USB Link and the controller. If you are not sure of the wiring polarity, use a USB isolator between the computer and the USB Link. Purchase a USB isolator online from a third-party manufacturer.

Configuring the TV-VVTZC-E2's properties

To start up the TV-VVTZC-E2, you must configure certain points and properties. *Appendix A* (page 101) is a complete list of all the points and properties, with descriptions, defaults, and ranges. These properties affect the unit operation and/or control. Review and understand the meaning and purpose of each property before changing it.

- Unit Configuration properties
- Setpoint Configuration properties
- Service Configuration properties
- *Linkage properties* (page 125)

See *Appendix A* (page 101) for a complete list of the controller's points/properties.

NOTE Engineering units shown in this document in the defaults and ranges are strictly for reference. You must enter an integer only.

©2022 Carrier.
All rights reserved.

Configuring ZS Sensors

The TV-VVTZC-E2 automatically detects 1 ZS temperature sensor set to address (1). This sensor is labeled **Main ZS Sensor**.

You must configure the ZS Sensor properties in the i-Vu® application or Field Assistant as follows:

- Add more ZS temperature, humidity, or CO^2 sensors in the **Properties** > **Control Program** tab > **Service Configuration** section. Ctrl+click on the property name to open the microblock popup and configure the settings on the **Details** tab.

  NOTE See *Service Configuration* **(page 114)** for details.

- Configuring the **ZS Sensor Binder**, and then the following as needed:
  - **ZS Zone Temp**
  - **ZS Zone Humidity**
  - **ZS Zone CO2**
  - **ZS model to show on graphic**
- Configure **Setpoint Adjustment**. See *Setpoints* (page 105).
- Set **Occupancy** and **Override** properties. See Maintenance for details.
- Alarm and Maintenance indications on the ZS Pro (display model) sensors. See *Appendix C: ZS Sensor display for TV-VVTZC-E2* (page 132).

Performing system checkout

1. Verify that all power and communication connections are correct and tight.
2. Verify that all zone terminals, ductwork, and zone controllers are properly installed and set according to installation instructions and job requirements.
3. Verify that all air duct connections are tight.
4. Verify that zone terminal fans and system controls operate properly. Verify that actuator screws are properly tightened.
5. At the zone terminals, check electrical system and connections of any optional electric reheat coil. If hot water reheat is used, check piping and valves against job drawings.
6. Verify that all zone terminal dampers are fully open.
7. If using an air source with field-installed controls, make sure controls and sensors have been installed and wired per manufacturer installation instructions.
8. Verify that the air source motor starter and, if applicable, the Hand/Off/Auto (HOA) switch are installed and wired.
9. Verify that the area around the air source is clear of construction dirt and debris.
10. Verify that final filters are installed in the air handler(s). Dust and debris can adversely affect system operation.
11. Verify that the space sensor and all optional sensors are reading correctly.

    NOTE You must use the i-Vu® application or Field Assistant to configure ZS Sensors.

CAUTION Before starting the air source fan, make sure the zone terminal dampers are not closed. Starting the fan with dampers closed will damage the system ductwork.

©2022 Carrier.
All rights reserved.

Commissioning the TV-VVTZC-E2

Using Field Assistant or the i-Vu application:

1 Calibrate the damper travel.

   a) Go to **Properties** > **Configuration** > **Service Configuration** > **Pressure Dependent Control** > **Details** tab > **Test and Balance**. Click **Calibrated Damper Close** and verify it goes to the closed position.

   b) Click **Calibrated Damper Open** and verify it travels to the full open.

   c) Click **Automatic Control** to return the damper to normal operation.

2 For Parallel or Series Fan terminals – in the **Locks** section, select the **Fan**'s **Lock value to** checkbox, then select **On** in the droplist. Click **Apply**. Verify the fan's operation.

3 For modulating hot water reheat – Go to **Properties** > **I/O Points** tab, then lock **Hot Water Valve** to 100%. If the controller is configured for Single Duct, make sure the air source fan is on. If ducted heat, verify the heat works by verifying that the SAT rises. For baseboard heat, physically check the heating element for proper temperature rise. Release the **Hot Water Valve**.

4 Release the fan.

5 If the controller is part of a linked system, verify **Linkage** > **Airside Linkage Status** shows **Active**.

Balancing the system

Most VVT system airflow designs are based on cooling requirements which require a greater CFM (liters/second) flow than heating requirements. Using this balancing procedure, you will adjust the cooling airflow first. If the heating and cooling maximum airflow requirements are the same, you will not need to balance the heating airflow.

NOTE We recommend that the heating minimum airflow settings for all the zones in the system be set to maintain the air source's design minimum heat CFM (liters/second) airflow across its heat exchanger to prevent damage to the equipment.

There are two methods of balancing the system:

- Use the i-Vu application or Field Assistant – Complete the following 3 steps to perform the system balancing.
- Use the Test & Balance program – Test & Balance can perform the 3 steps below, including shutting down the linked air source and performing global commands to all zones in the system. Do items 1–5 in Step 1 below prior to using Test & Balance. See Test & Balance's Help for required steps to complete the balancing procedure.

Step 1: Prepare for balancing

1 Log in to the i-Vu® application with an Administrator or Installer security level, or use Field Assistant.

2 Make sure the air source and its controller have been properly started and can run as a stand-alone unit.

3 Make sure the zone and bypass controllers have been addressed, commissioned, and started.

4 Verify that a manual damper is installed upstream of the zone damper. This damper will be used to adjust the maximum design airflow to the space when the zone damper is at 100% open. We strongly recommend that you do not use the damper Cool or Heat Max damper configuration setting for this purpose. Exception: If the design maximum airflow for one mode is less the other, the maximum damper position configuration may be used to adjust the designed airflow of that mode.

©2022 Carrier.
All rights reserved.

5 Verify that zone controllers supplying multiple registers have manual dampers on each register branch duct for balancing the design airflow through each register.

6 Disable the air source heating and cooling outputs using one of the following methods:

- Physically disconnect the air source controller's output wiring to the unit, then enable the fan.
- In the i-Vu or Field Assistant tree, select the RTU Open or WSHP Open controller. Go to **Properties** > **Configuration** > **Service Configuration** > **Service Test** and enable **Service Test** and **Fan Test**. Make sure all other outputs are disabled.

Step 2: Balance each zone

1 In the i-Vu® or Field Assistant tree, select the zone controller that is physically closest to the air source. Go to **Properties** > **Control Program** > **Configuration** > **Service Configuration** > **Pressure Dependent Control** > **Details** tab.

2 Do one of the following:

- Single Duct or Parallel Fan zone terminals – Click **Cool Max** to override the zone damper to its maximum open position. Check the zone for design cooling maximum airflow using certified measuring devices. Make adjustments using the manual volume damper located upstream of the zone damper.
- Series Fan zone terminals – Click **Damper Full Close** to override the zone damper to its fully closed position. Wait 30 seconds after the damper is closed, select the **Fan**'s **Lock value to** checkbox, then select **On** in the droplist. Click **Apply**. You must follow this procedure to prevent the fan from turning backwards. When the fan starts, click **Cool Max** to open the zone damper to its maximum position. Check the zone for design cooling maximum airflow using certified measuring devices. See the zone terminal manufacturer's instructions to adjust the fan speed to meet design airflow requirements. After you set the fan speed, verify that the zone terminal plenum air intakes do not have a positive airflow. If so, adjust the manual volume damper located upstream of the zone damper so that the airflow is not positive or negative.

Note the zone's name in the tree. You will need it when setting the system static pressure setpoint.

3 Check all branch duct terminal registers for design flow. If necessary, adjust the manual volume dampers in the branch ducts.

4 On the zone's **Pressure Dependent Control** > **Details** tab, click **Cool Min** to set the zone damper to its cooling minimum position. Type the desired damper position next to **Cool Min** to adjust the airflow to the design value. If you do not have a design value, set the value to no less the 10% for minimum ventilation.

5 Parallel Fan Zone Terminals only - To adjust Parallel Fan airflow, make sure **Cool Min** is active, select the **Fan**'s **Lock value to** checkbox, then select **On** in the droplist. Click **Apply**. See the zone terminal manufacturer's instructions on adjusting the fan speed to meet design airflow requirements. When finished, clear the **Fan**'s **Lock value to** checkbox.

6 Click **Vent** to set the zone damper to its ventilation position. Type the desired damper position next to **Vent** to adjust the airflow to the design value. If you do not have a design value, leave the value at 50% for minimum ventilation.

7 Series Fan Zone Terminals only - If the zone maximum heating airflow design requirements are the same as cooling, the **Heating Max Damper Position** should be 100%, same as the **Cooling Max Damper Position**. If the heating requirement is less than the cooling requirement, type the appropriate value in **Heating Max Damper Position** per the design requirements.

8 If the terminal has ducted reheat, click **Reheat Min** to force the zone to its reheat damper position. Type the desired damper position next to **Reheat Min** to adjust the airflow to its design reheat position.

9 If the zone maximum heating airflow design requirements are the same as cooling, skip this step. If they are less than cooling, click **Heat Max** to force the zone to its maximum heating position. Check the zone for design heating maximum airflow using certified measuring devices. Type the damper position next to **Heat Max**.

©2022 Carrier.
All rights reserved.

10 To set the heating minimum airflow, click **Heat Min**, then type the damper position. We recommend that the sum of this setting for all zones in the system be equal to the minimum heat CFM (liters/second) requirements of the air source.

11 Repeat steps 1 through 10 for each zone until all zones have been balanced.

Step 3: Set the system static pressure

For the air source to deliver the required airflow, you must set the bypass controller's static pressure setpoint high enough to provide the demand but low enough to maintain reasonable noise levels. The bypass controller maintains static pressure by controlling a damper or a supply fan VFD. You need the following data to set the static pressure:

- The air source's design maximum airflow in CFM (liters/second) (manufacturer's data)
- The system's design external static pressure (inches or water). This is the amount of static pressure that the air source is designed to deliver at its maximum design airflow in CFM (liters/second) (supplied by the mechanical design engineer).
- The maximum cooling or heating (whichever is greater) CFM (liters/second) requirements for all zones connected to the air source

NOTE The air source fan must have been tested and certified that it can deliver the above requirements.

The sum of the maximum CFM (liters/second) requirements of all zones will generally exceed the air source's maximum CFM (liters/second) rating by 10 to 20%. This is by design and based on a factor known as diversity. It works on the basis that under normal design heating and cooling conditions, not every zone will be 100% open. Knowing this, you will need to force open only zones whose sum CFM (liters/second) is equal to the unit design CFM (liters/second) . With the bypass damper fully closed (0%) or supply fan VFD at 100%, the bypass controller's static pressure should be the controlling setpoint.

To set the static pressure:

1 Starting with zone furthest from the air source and working towards it, add up the maximum design CFM (liters/second) airflow of the zones until the sum equals the air source's design CFM (liters/second) (+/-5%). Note each zone that you included.

2 For each zone noted in step 1, go to **Properties** > **Control Program** > **Configuration** > **Service Configuration** > **Pressure Dependent Control** > **Details** tab. Click **Cool Max** or **Heat Max** (whichever has the highest design max airflow) to force the damper to its maximum open position.

3 In the tree, select the Bypass controller, then go to **Properties** > **Control Program** > **Status**. Note the **Static Pressure** value, then go to **Unit Configuration** > **Bypass Control** > **Details** tab.

   - If **Damper Position** is 0% or **VFD Output** is 100%, enter the static pressure in the **Duct Static Pressure Setpoint** field.
   - If the **Damper Position** is not 0% or **VFD Output** is not 100%, enter the static pressure +.1" (.025 kPa) in the **Duct Static Pressure Setpoint** field. Wait 1–2 minutes, then verify that the **Damper Position** is 0% or **VFD Output** is 100%. If not, repeat the process, adding .05" (.012 kPa) to the previous **Duct Static Pressure Setpoint** until the **Damper Position** is 0% or **VFD Output** is 100%.

4 For each zone in the system that was balanced, go to its **Pressure Dependent Control** > **Details** tab, then click **Automatic Control** to return the zone to normal control.

5 In the tree, select the air source controller, then do one of the following.

   a) For an RTU Open or WSHP Open controller, go to **Properties** > **Control Program** > **Configuration** > **Service Configuration** > **Service Test** and disable **Service Test** and **Fan Test**.

   b) For any equipment whose wiring was disconnected to insure that only the fan only was running, reconnect it the wires for normal operation.

CAUTION You must complete steps 4 and 5 to prevent loss of temperature control to the space and to maintain normal operation of the system.

©2022 Carrier.
All rights reserved.

Sequence of operation

The TV-VVTZC-E2 supports 3 types of pressure-dependent terminal configurations:

- Single duct
- Series fan-powered
- Parallel fan-powered

The controller can operate as part of a linked VVT system or as a stand-alone controller.

Temperature sensors

The TV-VVTZC-E2 supports the following temperature sensors:

Sensors	Notes
Space temperature sensors:	
• Wireless Standard or Plus[1]	You can average up to 5 wireless sensors.
• ZS Standard, Plus, Pro[2]	You can average up to 5 ZS sensors - a combination of temperature, humidity, and/or CO^2 sensors.
• T55[3]	Push the sensor's override button from 2 to 10 seconds to initiate a timed override.
	If a network space temperature value is used, that value must be written to the BACnet space temperature point (system_spt) at 1 to 5 minute intervals or on a COV of 0.1Δ°F (.06Δ°C) .
	To reference another zone as your space temperature input, read the BACnet point zone_temp by using the network point **System Space Temperature**.
Duct temperature sensors:	
• Duct Air Temperature (DAT)	10K Type II. If the zone does not have ducted reheat, install a DAT sensor on the inlet of the damper.
• Supply Air Temperature (SAT)	If the zone has ducted reheat, install an SAT sensor downstream of the reheat source. The SAT is used in controlling the reheat.
	The DAT/SAT determines the air source mode if Linkage communication fails or if the controller is stand-alone. See *Air Source Mode Determination* (page 65) for details.

[1] To configure the control program for the desired user interaction with the sensor, see the *Wireless Sensors Application Guide*. For detailed instructions, see the *Wireless Sensors Installation Guide*.

[2] For basic user instructions, see the *ZS Sensor User Guide*. For detailed installation instructions, see the *ZS Sensors Installation Guide*.

[3] See the *Carrier Sensors Installation Guide* for details on T55 sensors.

©2022 Carrier.
All rights reserved.

Zone airflow control

The TV-VVTZC-E2 provides pressure-dependent zone temperature control by modulating its built-in damper actuator to control the flow of primary air into the zone. The controller uses PID control to calculate the damper position based on the difference between the zone's temperature and setpoints.

The air source mode determines if the primary air can meet the zone's need. If the zone controller is in a linked system, the air source mode is determined by the air source. If the zone controller is stand-alone or if linkage communication fails, the mode is determined by the controller's SAT. See *Air source mode determination* (page 65). If the air source mode is the same as the zone's local mode, the damper is positioned between the mode's configurable minimum and maximum damper position. If not, the damper is positioned at the mode's minimum damper position to insure sufficient minimum airflow at the air source.

When the air source mode is Vent and the zone's temperature demand is satisfied, the damper moves to its **Vent Position** to increase airflow and ventilation to the space.

Single duct with reheat – The **Reheat Min Damper Position** allows an increase of primary airflow across the terminal's ducted heating coil when the terminal is operating its local heat while the air source mode is Cool. This provides the ability to lower the cooling minimum airflow limits while providing the necessary airflow when the terminal is heating to ensure design load conditions and electric heater minimum airflow.

Parallel fan terminals – The controller's **Parallel Fan On Value** determines when the fan turns on to increase airflow at the zone's diffusers and prevent cold air from dumping into the zone when the system mode is Cool. This is achieved by increasing the volume and temperature of the air exiting the diffusers. Should the zone's damper close below the **Parallel Fan On Value**, the parallel fan is energized to mix ceiling plenum air with the primary air to increase total airflow and ventilation to the zone. The fan turns off when the damper position opens to 1% above the setpoint.

The fan also starts in Heat mode if the zone is configured for ducted heat as described in Zone reheat control.

Series fan terminals – The fan energizes when the air source fan is on if the zone controller is part of a linked system or in the unoccupied heat mode and the equipment fan is off. If the zone controller is stand-alone, the fan runs continuously. There is a fan start delay on transition to occupied, based on the **Power Fail Start Delay**. Before the fan starts, the damper closes. The damper position must be less than 5% for 10 seconds before the fan starts to prevent the fan from starting backwards.

See *Appendix B: VVT terminal modes* (page 130).

Damper Actuator(s) – The TV-VVTZC-E2's built-in 45 in/lb (5 Nm) actuator has a 154 second full travel time for 90° operation. For field retrofit applications, the actuator can be adjusted for a damper stroke between 30° and 90°, and it can be configured to move clockwise (default) or counterclockwise.

If the built-in actuator's torque is insufficient for large damper applications, the TV-VVTZC-E2's analog output can drive an external, 0-10 volt, high-torque actuator. Or, the controller can drive one or more additional slave actuators. A slave actuator must be mounted and configured to fully close the damper when the output signal is 0 volts. See *Wiring field-supplied actuators to the analog output.* (page 50)

Zone reheat control

The TV-VVTZC-E2 can be configured for one of the following **Heat Types** to meet the zone's heating requirements:

- Modulating Hot Water/Steam
- Modulating SCR Electric
- Two Position Hot Water/Steam
- Staged Electric Heat (up to 2 stages for Series/Parallel Fan, up to 3 stages for Single Duct.)
- Combination Modulating Baseboard/Staged Electric Heat (up to 2 stages for Series/Parallel Fan, up to 3 stages for Single Duct.)

©2022 Carrier.
All rights reserved.

All of the above except Combination Modulating Baseboard/Staged Electric Heat can be ducted or non-ducted (baseboard). For ducted heat and Combination Modulating Baseboard/Staged Electric Heat, an SAT sensor (33ZCSENSAT) must be installed in the duct downstream of the heat source. The controller has a configurable **Maximum Heating SAT** for supply air temperature control. The zone controller monitors the (SAT) when the terminal's ducted heat is operating.

If the network provides the OAT, heating can be disabled if the OAT rises above the configured **Heating Lockout Temperature**.

Modulating Hot Water / Steam Heating Heat – The controller modulates a normally closed or normally open hot water or steam valve connected to the discharge air heating coil. The valve opens and closes as needed to satisfy the zone's heating requirements. For ducted heat, the terminal's heat supplements heat from the primary air source if it is in heating mode and is controlled so that the SAT does not exceed the **Maximum Heating SAT** [90°F (32.2°C) default]. For baseboard heating (non-ducted heat), the valve modulates to keep the zone's temperature at the heating setpoint.

SCR Electric Heat – The controller modulates an SCR heat output connected to the SCR electric heat control input. The output increases as needed to satisfy the zone's heating requirements. For ducted heat, the terminal's heat supplements heat from the primary air source if it is in heating mode and is controlled so that the SAT does not exceed the **Maximum Heating SAT** [90°F (32.2°C) default]. For baseboard heating (non-ducted heat), the SCR heat output modulates to keep the zone's temperature at the heating setpoint.

Two-Position Hot Water / Steam Heating Heat – The controller operates a normally closed or normally open hot water or steam valve connected to the discharge air heating coil. The valve opens and closes as needed to satisfy the zone's heating requirements. For ducted heat, the terminal's heat supplements heat from the primary air source if it is in the heating mode and is controlled so that the SAT does not exceed the **Maximum Heating SAT** [90°F (32.2°C) default]. For non-ducted (baseboard) heating, the valve is controlled to keep the zone's temperature at the heating setpoint.

Electric Auxiliary Heat – The controller operates 1 or 2 stages of electric heat. For ducted heat, the terminal's heat supplements heat from the primary air source if it is in the heating mode and is controlled so that the SAT does not exceed the **Maximum Heating SAT** [90°F (32.2°C) default]. For non-ducted (baseboard) electric heat, the stages are controlled as needed to keep the zone's temperature at the heating setpoint.

Combination Modulating Baseboard / Electric Heat – The controller can modulate a normally closed or normally open hot water or steam valve connected to a perimeter baseboard radiation system and control up to 2 stages of ducted electric heat. The valve modulates to satisfy the zone's heating requirements. If the valve cannot meet the load, electric heat is used. The terminal's electric heater supplements heat from the primary air source if it is in heating mode and is controlled so that the SAT does not exceed the **Maximum Heating SAT** [90°F (32.2°C) default].

Parallel Fan Heat On Delay – For Parallel Fan terminals only, the controller has a configurable **Parallel Fan Heat On Delay** to save energy. During the delay (15 minute default), only the fan operates to recycle heat from the ceiling plenum. If the heating requirement is not met by the end of the delay, reheat is enabled.

Fan Heat Off Delay – For fan-powered terminals, the controller has a configurable **Fan Off Delay**. After the heating coil de-energizes, the fan continues to run for the length of the delay to deliver to the zone any heat stored in the coil. The default delay of 2 minutes is optimal for ducted hot water coils. For ducted electric heat coils, the nominal delay is approximately 1 minute. For baseboard and non-ducted heat, the delay should be set at 0.

This feature applies to parallel fan terminals in both occupied and unoccupied mode and series fan terminals in the unoccupied mode if the air source fan is off.

©2022 Carrier.
All rights reserved.

Demand control ventilation (DCV) and dehumidification using optional sensors

The TV-VVTZC-E2's **IN-01** input supports an optional CO2 sensor or Relative Humidity (RH) sensor. The sensor can have a 5-volt maximum output. The range is configurable as either 0–5 or 1–5 volts (1–5 volt supports 4–20 mA sensors with a 250 ohm resistor). The controller's low and high sensor input configuration allows for a wide range of sensors.

You can also connect ZS Sensors with CO_2 and/or RH to the TV-VVTZC-E2's **Rnet**. If you have more than one sensor, the controller determines DCV and dehumidification based on the highest sensor value and not the average. You can adjust this in the i-Vu application or Field Assistant.

The controller can also support both DCV and dehumidification functions by using a system RH or CO_2 sensor input connected to another controller.

NOTE If the connected sensor and/or system sensor value are to be used by the air source through Linkage, set the appropriate control type to **Enable**. If you do not need local control at the zone, set **DCV Max Vent Airflow** or **Maximum RH Override Airflow** to 0.

Demand Control Ventilation (DCV) – Requires CO2 sensor

The zone controller monitors the CO2 sensor and can override the temperature control to respond to increasing CO2 levels when the zone is occupied. If the sensor's value remains below the **DCV Start Ctrl Setpoint**, the **Occupied Min Airflow** setpoint provides the base ventilation rate as defined by ASHRAE. As the CO2 level exceeds the **DCV Start Ctrl Setpoint** and the air source is in cooling or ventilation mode, the controller increases airflow to the zone starting at the **Occupied Min Airflow** and then proportionally increases ventilation as the CO2 level increases. If the sensor's value exceeds the **DCV Max Ctrl Setpoint**, the controller maintains the **DCV Max Vent Airflow** until the zone's CO2 level decreases.

When the zone is unoccupied, the **Unoccupied Min Airflow** provides the base ventilation as required.

If the controller is configured for auxiliary heat, the controller will maintain the zone's temperature at a heating setpoint that is temporarily increased to a value halfway between the heating and cooling setpoints when DCV is active. This prevents an excessive drop in zone temperature caused by the additional ventilation. If auxiliary heat is not available, the **DCV Max Vent Airflow** setpoint should be readjusted to prevent overcooling or set to 0 to disable DCV at the zone.

Dehumidification – Requires RH sensor

The zone controller monitors the RH sensor and can provide dehumidification if the sensor's value exceeds the **Occupied RH Control Setpoint** and the zone is occupied. If the zone is occupied, does not require heating, and the air source is operating in a cooling mode, the controller will override the temperature control to increase airflow to the zone. The primary air must have a sufficiently low dew point for dehumidification to function properly. During the dehumidification mode, the heating setpoint is temporarily increased to a value halfway between the heating and cooling setpoints to prevent overcooling in the zone. The controller uses a PID control loop to provide dehumidification. If auxiliary heat is not available, the **Maximum RH Override Airflow** should be readjusted to prevent overcooling or set to 0 to disable Dehumidification at the zone.

NOTE If both control functions are enabled, the zone will control to the greatest calculated minimum cfm (liters/second) airflow value of the three functions (temperature, RH, or IAQ).

©2022 Carrier.
All rights reserved.

Occupancy

The TV-VVTZC-E2's operation depends on the zone's occupancy state as determined by occupancy schedules or a remote occupancy override.

Occupancy Schedules – An occupancy schedule can be one of the following:

- A local schedule set up directly in the controller using a touchscreen device or Field Assistant.
- A System Occupancy network point. This point links the controller occupancy to another controller in the network so that multiple zones can follow the occupancy of another VVT Zone or other controller on the network.

To set up occupancy schedules, you first define a schedule for each day of the week and then define schedules for the exceptions, such as holidays. The exceptions can be based on a date, a date range, or a week and day.

NOTES

- The **Occupancy Schedules** property must be enabled (default).
- A network schedule downloaded from the i-Vu application will overwrite a local schedule that was set up in a touchscreen device or Field Assistant.

Remote Occupancy Override – The controller monitors its **IN-04** input that is typically connected to the isolated, dry contact of an occupancy sensor located in the zone. The controller can override the occupancy state based on whether or not the space is actually occupied. If the occupancy sensor contact is in the same state as **Occ Override Normal Logic State** setting, the zone follows its normal occupancy schedule. If the contact is in the opposite state, it overrides the zone into the unoccupied mode. The input can be configured for normally closed or normally opened contact types and is set to Open by default so that it does not affect the controller occupancy operation if left unused.

Learning Adaptive Optimal Start – This function gradually adjusts the unoccupied setpoints over a specified period of time to achieve the occupied setpoint by the time scheduled occupancy begins. This learning adaptive algorithm uses the **learned heating capacity** and **learned cooling capacity** values to calculate the effective setpoints prior to the occupied start time. The algorithm calculates a learned cooling and heating capacity during the previous unoccupied time. Set the **Learning Adaptive Optimal Start** recovery period from 1 to 4 hours in **Optimal Start**. When the **Learning Adaptive Optimal Start** routine runs, adjustments are based on the color that is achieved when occupancy begins. Adjustment amounts are defined in the thermographic color fields located directly above the **Effective Setpoints** graph under **Setpoints**.

BAS On/Off – This function allows third party control of the controller occupancy. **Occupancy Schedules** must be set to **Disable** to use this function. When set to **Occupied** or **Unoccupied**, **Optimal Start** is automatically disabled.

For additional information on ZS Sensor occupancy and override settings, see Maintenance Points and Properties.

©2022 Carrier.
All rights reserved.

Alarms

Space Temp Sensor Alarm – The TV-VVTZC-E2 monitors each space temperature sensor and the network input for space temperature. If no valid space temperature value is available, the controller generates an alarm and disables all local heating or cooling. The controller modulates the damper to the minimum heat, minimum cool, or ventilation position based on the air source mode. Normal operation resumes when the controller detects a valid sensor value.

Space Temperature Alarm – The controller generates an alarm if the space temperature exceeds the alarm setpoint. The occupied alarm setpoint is the configurable **Occupied Alarm Hysteresis** (5Δ°F [2.8Δ°C] default) subtracted from and added to the configured occupied heat and cool setpoints. The configurable unoccupied high and low alarm setpoints have a fixed 10 minute alarm delay. When a transition from unoccupied to occupied occurs or the occupied temperature setpoints are changed, causing an alarm condition, the controller automatically calculates an alarm delay of 10 minutes for each degree of change. The delay prevents unnecessary alarms and gives the zone time to correct the alarm condition. The alarm returns to normal when the space temperature goes between the current mode's setpoints.

Supply Air Temperature Alarm – The controller generates an alarm if the SAT exceeds the configured **High SAT Alarm Limit** (120°F [48.9°C] default) or falls below the **Low SAT Alarm Limit** (45°F [7.2°C] default) for more than 5 minutes. The hysteresis for return to normal is 3Δ°F (1.7Δ°C) . The **High SAT Alarm Limit** should be set to a value at least 15Δ°F (8.3Δ°C) above the **Maximum Heating SAT** or the maximum discharge temperature from the air source, whichever is greater.

Space Relative Humidity Alarm – If a Space Relative Humidity (RH) sensor is installed, the controller generates an alarm if the sensor's value exceeds the **Occ High RH Alarm Limit** (100% rh default) or the **Unocc High RH Alarm Limit** (100% rh default). The controller provides a 30-minute alarm delay during unoccupied periods. During occupied periods, the controller uses the **Occ High RH Alarm Limit**. When a transition from unoccupied to occupied occurs or the occupied high alarm limit is lowered causing an alarm condition to occur, the controller automatically calculates an alarm delay of 5 minutes per %RH multiplied by the amount of the change. The delay prevents unnecessary alarms and gives the zone time to correct the alarm condition. The hysteresis for return to normal is 3% RH.

Indoor Air Quality Alarm – If a CO_2 sensor is installed, the controller generates an alarm during occupied periods if the sensor's value exceeds the **Occupied High CO2 Alarm Limit**. When a transition from unoccupied to occupied occurs, or if the occupied alarm limit is changed to a value that causes an alarm condition to occur, the controller automatically calculates an alarm delay based on the error from setpoint (15 minutes minimum, 4 hours maximum). The delay prevents unnecessary alarms and gives the zone time to correct the alarm condition. To disable the IAQ alarm, set **Occupied High CO2 Alarm Limit** to 0. The default value is 1100ppm. The hysteresis for return to normal is 100ppm.

Filter Alarm – For series or parallel fan-powered terminals, the controller monitors the accumulated hours of fan operation and generates an alarm when the **Filter Runtime** hours exceed the configured **Filter Service Alarm Timer** limit. The default value is 0 hours which disables the alarm. The alarm can be reset by setting **Reset Filter Alarm** to On or resetting the configured alarm limit to 0 hours.

Airside Linkage Alarm – The slave zone controller generates an alarm if it does not receive linkage information for 5 minutes. If the controller is the VVT Master, it generates an alarm if it does not communicate with its air source for 5 minutes. A return-to-normal is generated after successful Linkage communication resumes.

©2022 Carrier.
All rights reserved.

Demand limiting

Demand limiting is a cost-saving strategy to reduce energy consumption. The strategy expands the setpoints when the system reaches one of 3 levels of consumption. With the expanded setpoints, the equipment works less, thereby saving energy.

If the TV-VVTZC-E2 receives a demand limit signal through the network, it expands its setpoints based on the demand level. The default amounts are:

- Demand Level 1: 1Δ°F (.6Δ°C)
- Demand Level 2: 2Δ°F (1.1Δ°C)
- Demand Level 3: 4Δ°F (2.2Δ°C)

Linkage

The i-Vu Control System uses linkage to exchange data between the zone terminals and their air source to form a coordinated HVAC system. The system's air source controller, zone controllers, and bypass controller are linked so that their data exchange can be managed by one zone controller configured as the VVT Master.

The VVT Master gathers the following information from the slave zone controllers: occupancy status, setpoints, space temperature, relative humidity, CO_2 level, damper position, and optimal start data. The VVT Master performs mathematical calculations and algorithms on the data and then sends the composite information to the air source. The VVT Master receives information from the air source such as mode, supply air temperature, and outside air temperature, if present, and passes that information to all linked controllers.

The VVT Master determines system operation by prioritizing heating and cooling requirements from all the zones based on their occupancy and demand. The VVT Master scans the system continuously to determine if any zones are occupied. Occupied zones are a higher priority than unoccupied zones. The VVT Master evaluates all the occupied zones' heating or cooling demands and sends a request to the air source for:

- Cooling, if the number of occupied zones with cooling demands exceeds the number of occupied zones with heating demands, and the demand is greater than or equal to the number of configured **Linkage Callers**.
- Heating, if the number of occupied zones with a heating demand exceeds or is equal to the number of **Linkage Callers**.

A Linkage caller zone is determined by two user-adjustable parameters, A binary value is used to inhibit any individual zone from becoming a heat or cool caller.

If **Inhibit Cooling Call from this zone?** is set to **Yes**, then this zone is ignored when determining total cooling calls. Likewise, if **Inhibit Heating Call from this zone?** Is set to **Yes**, then this zone's heating requirement will be ignored.

Next, if both of the above are set to **No**, then the amount of zone temperature deviation from setpoint determines when a zone becomes a caller. For cooling, this is determined by the amount of the yellow setpoint band. A zone must exceed this band and enter into the orange band to become a cooling caller. The yellow band by default is 1Δ°F (.5Δ°C), therefore the space temperature must exceed the cooling setpoint by more than 1Δ°F (.5Δ°C) to be counted as a cooling request.

The light blue band is used to determine the deviation required to become a heating caller. It is also set to a default value of 1Δ°F (.5Δ°C), but you can adjust it.

If no zones are occupied, or no occupied zones require heating or cooling, the VVT Master performs the evaluation described above for the unoccupied zones.

The VVT Master then gathers the following information and sends it to the air source:

- The setpoints and space temperature from the zone with the greatest demand for the requested air source mode (heating or cooling). (This zone is called the reference zone.)
- The system occupancy status
- Most open damper position from any zone
- RH and CO_2 values (if applicable)

©2022 Carrier.
All rights reserved.

The air source responds by sending the air source mode, supply air temperature, and outside air temperature. The air source verifies the mode by comparing its supply air temperature to the space temperature received through Linkage. See the air source documentation for operation and parameters used to verify its mode. This verification allows the VVT system to determine if the desired air source mode is actually being provided. For example, if the VVT Master sends a request for heating and the air source does not have heat or it's heat has failed, the air source's actual mode indicates that and its current mode is sent to the zones so that they can control accordingly.

The system remains in that mode until all zones of that demand are satisfied or until the System Mode Reselect Timer (factory default is 30 minutes) causes a forced re-evaluation of the system. If there is no demand for the opposite mode, the reselect timer starts again and the current mode continues until all zones are satisfied or until the reselect timer expires, repeating the process. If there is a demand for the opposite mode, the VVT Master sends the reference zone's space temperature and setpoints to the air source and restarts the reselect timer. The air source re-evaluates its demand based on the new information and goes to the Vent mode until the new mode can be verified as described above. The amount of time this takes is determined by the air source's operating parameters.

The VVT Master continuously evaluates the system and updates the air source with the most current system demand. Based on the evaluation, the reference zone can change from one zone to another. The evaluation process continues until there is no demand from any zone or the 30 minute timer causes a re-evaluation of the system conditions.

If no heating or cooling is required or the current air source mode is satisfied, the VVT Master calculates the weighted average of the occupied and unoccupied heating and cooling setpoints. It also calculates a zone temperature that is midway between the setpoints (occupied or unoccupied based on the system's current occupancy status). This information, plus the occupancy status, is sent to the air source so that its current mode is disabled and the unit ceases heating or cooling operation. If the system is occupied, the air source fan and OA damper, if applicable, operate to maintain proper ventilation.

Linkage modes and operation

Linked air source modes – In a linked system, the air source determines its operating mode and qualifies that mode based on its own SAT. The following modes can be sent by the air source depending on its capability and configuration:

OFF	Air source fan is off. Terminal damper is positioned approximately 70% open to allow for system restart.
WARMUP	Air source fan is on and providing first cycle of heat when changing from unoccupied to occupied. It may also be used as an equipment safety to increase system airflow. The terminal's heating setpoint temporarily increases to the midpoint between the configured occupied heating and occupied cooling setpoints.
HEAT	Air source fan is on and providing heat. The terminal modulates its primary air damper to maintain the current heating setpoint.
FREECOOL	Air source fan is on and providing cooling using only the economizer and usually during an unoccupied period. The terminal modulates its primary air damper to maintain the midpoint between the configured occupied heating and occupied cooling setpoints.
COOL	Air source fan is on and providing cooling. The terminal modulates its primary air damper to maintain the current cooling setpoint.
PRESSURIZATION	Air source supply fan is on usually as a result of a fire-life safety input being active. It may also be used as an equipment safety to increase system airflow. The terminal modulates its primary air damper to provide the configured maximum cooling airflow.

©2022 Carrier.
All rights reserved.

EVACUATION	Evacuation is usually the result of a fire-life safety input at the air source being active. The terminal fully closes its primary air damper and disables its terminal fan, if equipped.
VENT	All terminals treat VENT mode the same as the COOL mode. For VVT terminals, VENT modes allows for an increase in airflow. VVT terminals use the greater of the configured Vent Damper Position or the Minimum Cooling Damper Position as the minimum during the VENT mode.

See the air source's installation manual for more specific operation.

Local air source modes – If the zone controller is stand-alone, or if linkage communication fails, the zone controller assumes that the fan is always on and monitors its SAT sensor to determine if the primary air source is providing heating, cooling, or recirculating air in a fan-only or ventilation mode.

HEAT	For Series or Parallel Fan controllers when the zone terminal fan is off or for single duct controllers: The zone's local heat has not operated for at least 5 minutes, and the SAT is more than 5Δ°F (2.7Δ°C) warmer than the space temperature. If the terminal fan is on, the SAT must be at least 8Δ°F (4.4Δ°C) more than the space temperature. In all cases, Heat mode is maintained until the SAT drops 2Δ°F (1.1Δ°C) below the space temperature.
VENT	The zone's local heat has not operated for at least 5 minutes and the SAT is between 65 (18.3°C) and 80°F (26.6°C).
COOL	The zone's local heat has not operated for at least 5 minutes, the current mode is not Heat or Vent, and the SAT is less than 65°F (18.3°C).

See *Appendix B: VVT terminal modes* (page 130).

Zone Environmental Index

The i-Vu® Control System uses Environmental Index (EI) to calculate a real-time numerical EI value for a zone based on ideal **Occupied** space temperature, optional relative humidity (RH) and/or CO2. Environmental Index determines the source(s) derating the EI value by continuously evaluating **Occupied** zone conditions. **EI Decreased By** displays the source(s) derating the EI value. The **EI Space Temp Setpoint Tolerance** 0.5Δ°F (0.28Δ°C) is subtracted from **Effective Heat Setpoint** and is added to **Effective Cool Setpoint**, expanding the ideal EI temperature sensitivity range. The EI is derated from the initial **Occupied** value of 100% if the space temperature deviates from the ideal EI temperature sensitivity range.

NOTE The **EI Space Temp Setpoint Tolerance** does not affect the controlling space temperature **Effective Heat Setpoint** or **Effective Cool Setpoint**.

©2022 Carrier.
All rights reserved.

The optional RH and/or CO2 values derate the EI value when they deviate from their setpoints.

- If **RH Control** is set to **Enable**, the EI is derated when the RH value is less than the **EI Humidity Low Limit** or when the RH value is greater than the **Occupied RH Control Setpoint**.
- If **DCV Control** is set to **Enable**, the EI is derated by CO2 if the value exceeds the **DCV Max Ctrl Setpoint**.

If a zone is **Unoccupied**, the EI will calculate a value of 0%.

EI Time Satisfied is the percentage of **Occupied** time which a zone maintains an EI value of 70% or higher.

Weighted EI determines the priority of a zone in an EI roll-up, which must be completed using a different control program. The value is determined by multiplying the real-time EI value by the **EI Weighting Factor**.

©2022 Carrier.
All rights reserved.

Downloading the TV-VVTZC-E2

Download to send the following items to the TV-VVTZC-E2:

Item	Notes
Up to 2 control programs, depending on available memory	Must be in **i-Vux.x\webroot**<system_name>**\programs**.
drv_fwex driver NOTE	The driver must be in **WebCTRLx.x\webroot**<system_name>**\drivers**. **NOTE** To verify that you have the driver's latest version, go to the Carrier Partner Community website and compare the latest version to the TV-VVTZC-E2's driver in SiteBuilder.
Editable properties	
Schedules	

If you change any of the above items or the TV-VVTZC-E2's address after the initial download, you must download again. The first download takes longer than subsequent downloads.

CAUTIONS

- The TV-VVTZC-E2 will lose stored data, such as trends, when you download.
- The TV-VVTZC-E2 outputs will not maintain their states when you download. This could cause equipment controlled by the TV-VVTZC-E2 to shut down and/or restart.

To download from the i-Vu® interface

1. On the i-Vu® **Network** tree, select the TV-VVTZC-E2.
2. Click **Downloads**.
3. Do one of the following:
   - If the controller is in the Downloads list, go to step 4.
   - If the controller is not in the list:
     a. Click **Add**.
     b. In the pop-up, select the controller.
     c. Select **All Content**.
     d. Click **Add**.
     e. Click **Close**.
4. Select the controller in the Downloads list.
5. Click **Start**.

NOTES

- If the download fails, locate, and resolve the problem, then retry the download.
- You can also download from the **Devices** page.

©2022 Carrier.
All rights reserved.

Adjusting the TV-VVTZC-E2 driver properties

After you find and upload the TV-VVTZC-E2 in the i-Vu® interface, you may want to customize the TV-VVTZC-E2's settings for your applications. You can change settings on the **Driver Properties** page.

1 In the i-Vu® interface, right-click the TV-VVTZC-E2 in the navigation tree and select **Driver Properties**.

2 Adjust the driver as desired.

Driver

The **Driver** page provides the following information plus the items described in the table below:

- The date/time of last parameter change or the last time the database was archived
- If control programs, properties, and schedules were successfully stored in memory
- The date/time of last backup and restore
- Undelivered Alarm Status

TouchScreen Control	
TouchScreen Schedule Edit Enable	Check this field to allow a user to edit this controller's schedules from an Equipment Touch or System Touch Schedules screen. **NOTE** Schedules edited on an Equipment Touch or System Touch are not uploaded to the i-Vu® application. This could result in the controller operating on a schedule that differs from the one you see in the i-Vu® interface.
Controller Clock	
Clock Fail Date and Time	Date and time the controller uses when its real-time clock is invalid.
Time Synch Sensitivity (seconds)	When the controller receives a time sync request, if the difference between the controller's time and the time sync's time is greater than this field's value, the controller's time is immediately changed. If the difference is less than this field's value, the controller's time is slowly adjusted until the time is correct.
Network Microblocks	
BACnet third party integration points capacity, **integration points requested**, and **integration points active**	Shows how many third-party BACnet points the TV-VVTZC-E2 allows (capacity), how many points are in the control program (requested), and how many are currently active (not disabled in i-Vu®). For example, if the controller allows 400 points, the control program has 350 points, and you disabled 30 points in i-Vu®, you will see: Integration points capacity: 400 Integration points requested: 350 Integration points active: 320
Number of poll retries before Network Input Microblocks indicate failure	The maximum number of retries after the initial attempt that a Network microblock will attempt to communicate with its target device. If unsuccessful, the point will transition to an idle state for 30 seconds before attempting to communicate again. Change this field only if directed by Technical Support.

©2022 Carrier.
All rights reserved.

Periodic rebinding interval	If a microblock uses a wildcard in its address, this timer determines how often the microblock will attempt to find the nearest instance of its target. For example, if an outside air temperature address uses a wildcard, a VAV application will look for the outside air temperature on the same network segment or on the nearest device containing that object.
BACnet COV Throttling	
Enable COV Throttling	Under normal circumstances, COV Throttling should be enabled to prevent excessive network traffic if an object's COV Increment is set too low. See EXCEPTION below. When enabled, if an object generates excessive COV broadcasts (5 updates in 3 seconds), the driver automatically throttles the broadcasts to 1 per second. Also, if the object's value updates excessively for 30 seconds, an alarm is sent to the i-Vu® application listing all objects that are updating excessively. A Return-to-normal alarm is sent only after all objects have stopped updating excessively. EXCEPTION: In rare circumstances, such as process control, a subscribing object may require COV updates more frequently than once per second. For these situations, clear this checkbox, but make sure that your network can support the increased traffic. You will also need to disable the **Excessive COV** alarms under the driver's **Common Alarms**.
Trend Sampling	
Collect a daily midnight sample for all points in this controller that are sampling on COV	For values that change infrequently, select to verify at midnight daily that the point is still able to communicate trend values.
Local Network Configuration	
Allow Local Network Configuration from other devices on the local network for 24 hours	You can unlock a controller for 24 hours to make IP address changes.
Locator LED	
Blink	Click the **Blink** button to prompt the Locator LED to flash for 15 seconds, allowing you to verify the controller's physical location. After flashing, whenever the actuator moves, the LED rotates in the same direction. LED rotation is automatically disabled after 1 hour and can be re-enabled by pressing the **Blink** button again.
Debug	
Enable Debug Messages	Enable only if directed by Carrier Control Systems Support.

©2022 Carrier.
All rights reserved.

Device

The **Device** page provides the following information plus the items described in the table below:

- BACnet device object properties for the TV-VVTZC-E2
- The character sets supported by this device for BACnet communication
- The controller clock's time and date

Configuration	
BACnet System Status	The current state of the controller: Operational Download in Progress Download Required Backup in Progress Non-Operational
The following fields refer to all networks over which the TV-VVTZC-E2 communicates.	
APDU Timeout	How many milliseconds the device will wait before resending a message if no response is received.
APDU Segment Timeout	How many milliseconds the device will wait before resending a message segment if no response is received.
Number of APDU Retries	The number of times the device will resend a message.

Notification Classes

A BACnet alarm's Notification Class defines:

- Alarm priority for Alarm, Fault, and Return to Normal states
- Options for BACnet alarm acknowledgment
- Where alarms should be sent (recipients)

Alarms in the i-Vu® application use Notification Class #1. The i-Vu® application is automatically a recipient of these alarms.

Priorities	**NOTE** BACnet defines the following Network message priorities for Alarms and Events.	
	Priority range	**Network message priority**
	00–63	Life Safety
	64–127	Critical Equipment
	128–191	Urgent
	192–255	Normal
Priority of Off-Normal	BACnet priority for Alarms.	
Priority of Fault	BACnet priority for Fault messages.	
Priority of Normal	BACnet priority for Return-to-normal messages.	

©2022 Carrier.
All rights reserved.

Ack Required for Off-Normal, Fault, and Normal	Specifies whether alarms associated with this Notification Class require a BACnet Acknowledgment for Off-Normal, Fault, or Normal alarms. **TIP** You can require operator acknowledgment for an Alarm or Return-to-normal message (stored in the i-Vu® database). In the i-Vu® interface on the **Alarm** > **Enable/Disable** tab, change the acknowledgment settings for an alarm source or an alarm category.
Recipient List	
Recipients	The first row in this list is from the i-Vu® application. Do not delete this row. Click **Add** if you want other BACnet devices to receive alarms associated with this Notification Class. **NOTE** Additional entries in this table may be lost after a download.
Recipient Description	Name that appears in the **Recipients** table.
Recipient Type	Use **Address** (static binding) for either of the following: • Third-party BACnet device recipients that do not support dynamic binding • When you want alarms to be broadcast (you must uncheck **Issue Confirmed Notifications**). This use is rare.
Days and times	The days and times during which the recipient will receive alarms.
Recipient Device Object Identifier	Type the **Device Instance** from SiteBuilder (or from the network administrator for third-party devices) in the **#** field.
Process Identifier	Change for third-party devices that use a BACnet Process Identifier other than 1. The i-Vu® application processes alarms for any 32-bit Process Identifier.
Issue Confirmed Notifications	Select to have a device continue sending an alarm message until it receives delivery confirmation from the recipient.
Transitions to Send	Uncheck the types of alarms you do not want the recipient to get.

Calendars

Calendars are provided in the driver for BACnet compatibility only. Instead, use the **Schedules** feature in the i-Vu® interface.

©2022 Carrier.
All rights reserved.

Common Alarms

On these pages, you can enable/disable, change BACnet alarm properties, or set delays for the following BACnet alarms:

Common alarms:

- Duplicate Address
- Control Program
- Controller Halted
- Locked I/O
- Program Stopped
- Excessive COV
- All Programs Stopped

Controller Generated Alarm	
Description	Short message shown on the i-Vu® **Alarms** page or in an alarm action when this type of alarm is generated.
Events	
Alarm Category and Alarm Template	See *Setting up an alarm source in the i-Vu® interface* in i-Vu® Help.
Enable	Clear these checkboxes to disable Alarm or Return to normal messages of this type from the TV-VVTZC-E2.
Notification Class	In a typical i-Vu® system, the Notification Class is 1; however, if needed, you can associate a different notification class with the alarm. See *Notification Classes* (page 71) to set up alarm delivery options for a specific Notification Class.

©2022 Carrier.
All rights reserved.

Specific Events

On these pages, you can enable/disable, change BACnet alarm properties, or set delays for the following BACnet alarms:

Specific alarms:

- Flow Control Alarm
- Reheat Valve Alarm

NOTE To set up alarm actions for controller generated alarms, see *Alarms* in i-Vu® Help.

Controller Generated Alarm	
Description	Short message shown on the i-Vu® **Alarms** page or in an alarm action when this type of alarm is generated.
Events	
Alarm Category and Alarm Template	See *Alarms* in i-Vu® Help.
Enable	Clear these checkboxes to disable Alarm or Return to normal messages of this type from this controller.
Notification Class	Do not change this field.

Custom Translation Tables

You can set up a translation table that an analog input will use to translate the raw data from a non-linear sensor to the engineering units you want it to provide on the output wire of the Analog Input microblock. In the navigation tree, select **Custom Translation Table #1**, **#2**, or **#3**. The **Properties** page has instructions.

For the input to use the translation table, go to the control program's **Properties** page > **I/O Points** tab. Click the analog input in the **Name** column. On the **Details** tab, set **Sensor Type (Scaling Method)** to **Non-Linear, Custom Table #__**.

BACnet Controller Properties

The **BACnet Controller Properties** page provides the following information plus the items described in the table below:

- The TV-VVTZC-E2's Ethernet MAC address
- Whether **Port S1** is being used for MS/TP and is disabled

NOTE The options shown on the page change according to your controller's settings.

©2022 Carrier.
All rights reserved.

MS/TP Configuration on Port S1	
Address	For Port S1—A unique address on the MS/TP network.
MS/TP Autobaud	To enable autobaud, select **Yes**. This device will receive its baud rate from the master device.
MS/TP Baud Rate	Set this to a baud rate that all other devices on the MS/TP network are set to.
Max Masters	To increase MS/TP performance, enter the highest address used on the MS/TP network for a master controller. This number must be less than or equal to 127.
Max Info Frames	This is the maximum number of information messages a controller may transmit before it must pass the token to the next controller. Valid values are 1 to 255.  **TIP** Set **Max Info Frames** to a number in the range 20 to 100 so that the router does not become a bottleneck for traffic being routed from a high-speed network to the slower MS/TP network.
End of Network Switch Status	
Port S1 End of Network	This displays the state of the **End of Net?** termination switch for Port S1.
IP Configuration	
Allow setup of IP addressing through an external tool	When this field is enabled, you can set up IP addressing through a tool. IP addressing is typically set up through the Service Port.
Enable IP configuration changeover	Only for custom static IP addressing—Select this field to remotely change the controller's **IP Address**, **Subnet Mask**, and **Default Gateway Address**. Type the new addresses and the **UDP Port** that your server is using to communicate to all controllers. In the **Changeover timeout** field, enter: • A specific length of time for the controller to attempt to communicate with the **Next Default Gateway Address**. The controller will use the **Next** setting as soon as the controller can communicate with the **Next Default Gateway Address**, or when the timeout occurs, whichever comes first. • **0:00** to have the controller use the **Next** settings as soon as the controller can communicate with the **Next Default Gateway Address**. See "To remotely change a controller's IP address" in i-Vu® Help for more information on using this feature.

BACnet Firewall

If this IP controller is accessible from the Internet, you can increase security by enabling its BACnet firewall. When enabled, this feature prevents the controller from responding to BACnet messages from unidentified sources and allows communication only with IP addresses that you define. These can be all private IP addresses and/or a list of IP addresses. Follow the instructions in the i-Vu® interface to set up the BACnet firewall.

©2022 Carrier.
All rights reserved.

Network Diagnostics - Statistics

This page shows the network statistics for each of the TV-VVTZC-E2's ports that are in use. This same information is provided in a *Module Status report* (page 95).

Click the **Error Rate Trend** or **Packet Rate Trend** link at the bottom of each section to see the statistics displayed as trend graphs. You can also access these trends by clicking on the driver in the network tree, and then selecting **Trends** > **Enabled Points** > and the desired trend graph.

Click a port's **Reset** button to set all of the numbers to zero so the counting can start over.

Controller Statistics	
Error Counters	**Dropped Packets**—Data packets that could not be delivered. **Route Not Found**—Packets that could not be delivered because the requested network does not exist. **Route Unreachable**—These are routed packets whose destination network is either busy or offline.
Controller Sourced Packets	Shows the number of packets initiated by the TV-VVTZC-E2 that are not in response to a request from another device. The numbers in this table will also appear in the appropriate columns in the **Network Activity** tab.
Eth0/Eth1 Port Statistics	
BACnet/IP Statistics	**BACnet/IP Rx Unicast Packets**—BACnet/IP packets received from a single BACnet device. **BACnet/IP Tx Unicast Packets**—BACnet/IP packets transmitted to a single BACnet device. **BACnet/IP Rx Broadcast Packets**—BACnet/IP broadcast packets received by the TV-VVTZC-E2. **BACnet/IP Tx Broadcast Packets**—BACnet/IP broadcast packets transmitted by the TV-VVTZC-E2. **Whitelist Rejections** (if *BACnet Firewall* (page 75) is enabled)—Messages blocked by the BACnet Firewall because the IP address that sent the message was not in the whitelist.
Ethernet Statistics	**Ethernet Rx packets**—All packets (including non-BACnet packets such as a ping) received by the TV-VVTZC-E2. **Ethernet Tx packets**—All packets (including non-BACnet packets such as a ping) transmitted by the TV-VVTZC-E2. **Receive Errors (total)**—All errors related to received packets such as CRC errors, FIFO errors, frame errors, length errors, missed errors, and overrun errors. **Transmit Errors (total)**—All errors related to transmitted packets such as aborted errors, carrier errors, dropped errors, FIFO errors, heartbeat errors, and window errors. **Dropped Packets**—Packets dropped by the TV-VVTZC-E2's Ethernet interface.
Trends	**Error Rate Trend**—Shows the total number of errors within the interval time. **Packet Rate Trend**—Shows the total number of packets transmitted and received within the trend sampling interval

©2022 Carrier.
All rights reserved.

Network Diagnostics - Packet Capture

This page allows you to capture network communication on a port and then download the capture file for troubleshooting. Choose one of the following capture options:

- **Start/Stop** - Define the start and stop criteria, and then click **Start** and **Accept** to begin the capture. When the capture stops, the capture file is generated.
  NOTE If a Start/Stop capture is running on any other port, the **Get capture file** button will be disabled until all Start/Stop captures have completed.
  - **Start capture:** - When you check **At (mm/dd/yyyy hh:mm AM/PM)**, enter the time and date, and click **Start**, the packet capture begins at the date and time you specified.

    NOTE The hours field is validated from 0 to 12, and minute field is validated from 0 to 59.
  - **Continuous** - Click **Start** and **Accept** to begin the capture. Click **Save** to momentarily stop the capture and create the capture file. The capture will automatically resume. Click on the **Start/Stop** option to end the **Continuous** capture.

To download the capture file

Capture files are Wireshark files that are added to the Device Log Archive .tgz file. Do the following to view the files.

1 If you do not have Wireshark installed on your computer, download the latest version from the *Wireshark website* (*http://www.wireshark.org*).

2 Run the install program, accepting all defaults. Include WinPcap in the installation.

3 On the i-Vu® **Packet Capture** page, click **Get capture file** to download the .tgz file. The message appears "Retrieving the file, this may take a little while". Click **OK**.

NOTE If the size of the .tgz is large, there could be a considerable delay (for example, over 2 minutes) after you click **Get capture file** until your browser begins the download.

4 Open the .tgz file. The files are in the **captures** folder.

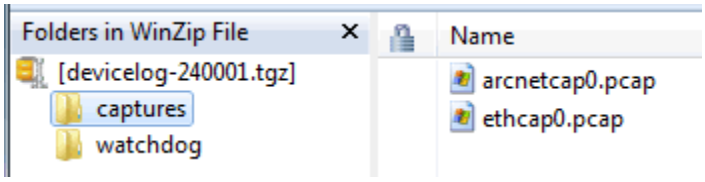

Capture file names are based on the ports.

NOTE Clicking **Get capture file** generates the port's .pcap file. If the port has a .pcap file from a previous capture, that file will be overwritten.

5 Extract the .pcap file from the .tgz file.

6 Open the .pcap file in Wireshark.

©2022 Carrier.
All rights reserved.

Act Net Bus

Act Net Bus Status

An Act Net device that is physically connected to the TV-VVTZC-E2 is automatically identified and the serial number and current status are displayed on the **Act Net Bus** page.

NOTE You can edit the address and description on this page. Applying changes can take up to 20 seconds to complete.

Act Net Bus Status	This table shows devices connected to the Act Net port. All fields are read-only.	
Device Address	Act Net device address (1 to 5). The same address is used as exp# in the microblock configuration with the input/output number for all Act Net devices set to 1.	
Device Description	This text is editable in the **Act Net Bus Configuration** table directly below.	
Serial Number	The serial number of the Act Net device. This number is printed on a label on the device.	
Device Status	Displays the current status of the device	
	Possible statuses	**Description**
	Normal Operation	Successful communication
	No Communication with the device	TV-VVTZC-E2 has lost communication with the Act Net device
	Duplicate Address on the network	More than one device has the same Device Address.
	Unsupported Device Type	Device is not recognized
	Act Net Wiring Error	Loopback error on Act Net bus, possibly caused by wiring problem or hardware failure.
Act Net Bus Configuration	This table shows devices connected to the Act Net port. Most fields are editable.	
Current Address	Bus address of the Act Net device	
Device Description	Edit the name if needed.	
Serial Number	Serial Number of the device corresponds to Current Address in the same row. This field is read-only if the corresponding device is in communication, otherwise becomes editable so that user can enter the serial number manually (can be found as a label on the actuator).	
New Device Address	Select a new bus address from the drop-down list.	

©2022 Carrier.
All rights reserved.

Configuration Status	Once all changes are accepted, after applying changes this fields shows success/fail statuses.	
	Possible statuses	**Description**
	Success	Address selection successful. It may take a few seconds to updates in the status table. Please refresh the page to see the updated status table.
	In Progress	This string appears after accepting the changes and before success/fail messages are appeared. This message may not appear all the time due to data refresh rate.
	Invalid serial number format	A serial number that was entered manually has an invalid format. Correct format example: 01647-20212-250-160
	Device not found	Serial number format is valid, but the device with the number cannot be located.
	Select unused address	If the **New Device Address** is a duplicate, select an unused address from the drop-down list. To update the table, click **Accept** after every change.
	Unknown Error	Firmware or bus error.
	Auto addressed device	When a device that does not have an address is found on the bus, an unused address in automatically assigned. You can select a different address in the **New Device Address** field, if needed.

To resolve duplicate addresses on Act Net bus

When devices display the error **Duplicate Address on the network**, you can use either of the following methods to resolve the problem.

- Method 1: Using the **Act Net Bus Configuration** table
  1. For each duplicate device, enter the **Serial Number**, which you can find on a sticker on the device.
  2. Select a **New Device Address** from the drop-down list.
  3. Click **Accept**.
  4. Verify that there are no longer any **Duplicate Address on the network** errors.

- Method 2: Reinstalling the devices
  1. Remove all duplicate devices from the bus.
  2. Connect one of the removed devices and wait for the **Act Net Bus Status** table to update.
  3. Chose a unique address for the new device and click **Accept**. Wait until the operation is successful.
  4. Repeat the steps 2 and 3 for the remainder of the removed devices.
  5. Verify that there are no longer **Duplicate Address on the network** errors.

©2022 Carrier.
All rights reserved.

Communication Status

Diagnostic Reporting is not applicable to the TV-VVTZC-E2.

Protocol Status shows the status of the protocols currently running on the TV-VVTZC-E2.

Standalone Controller Detection

You can use the fields on this page with a binary input in your control program to detect when the controller does not receive a write request from the selected network within the specified amount of time. The input remains OFF as long as write requests are received, but switches to ON if the controller does not receive a request within the specified time. The binary input must have the Expander number and Input number set to **99** and the I/O Type set to **Special**.

Flow Calibration Archive

The **Flow Calibration Archive** page shows measured flow and sensor readings that were entered in the i-Vu® interface Test and Balance or through the stand-alone Airflow Test and Balance Utility.

Flow Sensor Input Tubes	
Not Calibrated	Flow reading is being generated from default pressure table. Flow sensor always reads absolute.
Calibrated	Flow reading is generated from Airflow Control microblock readings section. Flow sensor indicates negative values if flow is reversed through the VAV box.
Normal / Reversed	Refers to the tube connections. If tubes are switched after calibration process is complete, the calibration process has to re-run to clear settings.

To set up Network Statistic trends

PREREQUISITE To view Network Statistic trends, you must have a i-Vu® v6.5 or later system with the latest cumulative patch.

To view the *Network Statistics* (page 76) as trend graphs, select the controller in i-Vu®'s navigation tree and go to one of the following:

- On the **Driver Properties** > **Network Diagnostics** > **Statistics** page, click a **Trend** link at the bottom of each section.
- Click the **Trends** drop-down button, select **Enabled Points** and then the graph you want.

©2022 Carrier.
All rights reserved.

You can define:

- How the graph looks on the trend's **Configure** tab.
- How you want trend samples to be collected on the **Enable/Disable** tab. See table below.

Field	Notes
Sample every _:_:_ (hh:mm:ss)	(Recommended method) To record the value at a regular time interval, enter hh:mm:ss in this field.
Sample on COV (change of value)	To record the value only when the value changes by at least the amount of the **COV Increment**, set the **Sample every** field to 0:00:00 and enter a value in the **COV Increment** field.
Max samples	Network Statistic trends have a non-configurable maximum trend log buffer size of 1440. **NOTE** Trending consumes memory in the controller. Click **Reset** to delete all samples currently stored in the controller.
Stop When Full	Check this field to stop trend sampling when the maximum number of samples is reached.
Enable trend log at specific times only	Collects trend data for the specific period of time you define in the time and date fields.
Enable Trend Historian	Archives trend data to the system database.
Store Trends Now	Writes all trend data in the controller to the system database without having to enable trend historian.
Write to historian every __ trend samples	Writes all trend data in the controller to the system database each time the controller collects the number of samples that you enter in this field. This number must be greater than zero and less than the number entered in the Max samples field. The number of trends specified must be accumulated at least once before the historical trends can be viewed. **NOTE** Any trends not stored in the historian will be lost if the controller loses power.
Trend samples accumulated since last notification	Shows the number of samples stored in the controller since data was last written to the database.
Last Record Written to Historian	Shows the number of trend samples that were last written to the database.
Keep historical trends for __ days	This is based on the date that the sample was read. Select the first option to use the system default that is defined on the **System Options** > **System Settings** > **General** tab. Select the second option to set a value for this trend only.

©2022 Carrier.
All rights reserved.

To set up the controller through the Comm/Service ports

You can communicate with the TV-VVTZC-E2 through a web browser by connecting a computer to one of the Comm/Service USB ports on the controller, using either the Carrier wireless service adapter or a USB cable.

NOTE You cannot access the Service port by plugging an Ethernet cable into Eth0 or Eth1.

Once you are connected to the network, you can:

- Access the controller setup pages
- Address and configure controllers
- View the controller's Module Status report
- View/change controller and network settings. Changes take effect immediately.
- Troubleshoot
- Use BACnet/Service port to access the i-Vu® application or a touchscreen device. See *To communicate through a BACnet/Service port network* (page 82).

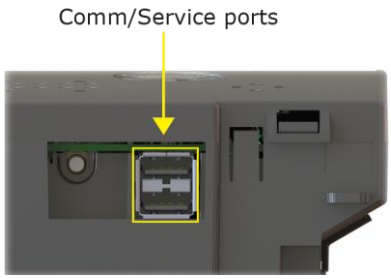

To access the controller setup pages and use the **Local Network** tab, you must first connect to and manually address one TV-VVTZC-E2. For instructions on connecting, see *Addressing the TV-VVTZC-E2 through the Comm/Service ports* (page 15). Navigate to http://local.access or http://169.254.1.1 to access the pages. Then set up the address on your selected TV-VVTZC-E2 on the **Ports** *tab* (page 83).

NOTE The first time you access the controller in the i-Vu® interface, after you have changed settings through the Service port, be sure to upload the changes to the system database. This will preserve those settings when you download memory or parameters to the controller.

ModStat tab

This tab provides the controller's Module Status report that gives information about the controller and network communication status. See *Appendix - Module Status field descriptions* (page 136).

©2022 Carrier.
All rights reserved.

Device tab

BACnet Object	
Device Instance	**Autogenerated**—(Default) The Device Instance is automatically set to a number using the IP Address, Subnet information, and the Carrier vendor ID 16. **Assigned**—Lets you enter a specific number that is unique on the BACnet network.
Device Name	**Autogenerated**—(Default) The Device Name is automatically set as the word device + the Device Instance. For example, device2423911. **Assigned**—Lets you enter a specific name that is unique on the BACnet network.
Device Location	You can enter an intuitive location for the device in the i-Vu® interface.
Device Description	You can enter an intuitive description for the device in the i-Vu® interface.
Configuration	
APDU Timeout	How many milliseconds the device will wait before resending a message if no response is received.
APDU Segment Timeout	How many milliseconds the device will wait before resending a message segment if no response is received.
APDU Retries	The number of times the device will resend a message.
Controller Information	
Clear Counts/Logs	Clears Reset counters and the three message history fields from the Module Status.
Data Backup and Restore	
Backup	Displays time of the last backup. Click button to backup the controller's control programs, properties, and schedules.
Restore	Displays time of the last restore. Click button to restore the most recent backup of the controller's control programs, properties, and schedules.

Ports tab

IP Port	
IP Addressing	Select the type of addressing the controller is to use. See *Addressing the TV-VVTZC-E2* (page 15).
Ethernet Port	
Address	A factory assigned Ethernet MAC Address for the **Eth0** and **Eth1** ports.
Port S1	
End of Network	Indicates status of the controller's **End of Net?** switch.
Protocol	Change active protocol, if needed.
Active Protocol	Indicates the active protocol on **Port S1 Configuration**.

©2022 Carrier.
All rights reserved.

BACnet tab

NOTE The TV-VVTZC-E2 can be configured for only one BACnet communication type.

On the **BACnet** tab, you can choose to run **BACnet Over IP** or **BACnet Over Ethernet** on the **Eth0** and **Eth1** ports. If you choose **BACnet Over IP**, you can edit the **BACnet UDP Port**.

Security tab

BACnet Firewall	If your BACnet Firewall configuration in the i-Vu® interface did not include the i-Vu® server IP address, thus blocking communication with the i-Vu® server, you can disable the controller's BACnet Firewall on the controller setup **Security** tab. **NOTE** You can enable the BACnet Firewall only in the i-Vu® interface.

Local Network tab

Use the **Local Network** tab to:

- Discover 256 i-Vu® XT or TruVu™ devices on a single network at a time.
- Discover both configured or unconfigured devices on this controller's network.
- See the number of devices discovered and the total number on the network.
- Identify the i-Vu® XT or TruVu™ controller that has had its DSC button pressed.
- Export the **Local Devices** that are present in the table (limited to 256) to a .csv file.
- Set a device's **Mode**, **Address**, and **Location**.
- Assign IP addresses to multiple devices at one time.
- Prompt an LED to blink on a device.

A device that is new from the factory or has not been previously configured with an IP address, can always be configured using the **Local Devices** table. However, once you have assigned a valid IP address, you have up to 24 hours to make any other changes. After 24 hours, the fields are not editable and the device is **Locked**.

You can unlock a device for 24 hours by either pressing the DSC button on the TV-VVTZC-E2 controller or by using the i-Vu® application. In the i-Vu® navigation tree, right-click the TV-VVTZC-E2, select **Driver Properties** and go to **Driver** > **Settings** tab > **Local Network Configuration**. Check **Allow Local Network Configuration from other devices on the local network for 24 hours** and click **Accept**.

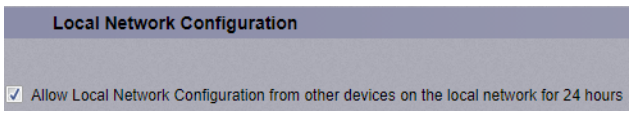

©2022 Carrier.
All rights reserved.

To discover devices on a network

1 To address a network of devices, you must first select one i-Vu® XT or TruVu™ controller and set the **IP Address**, **Subnet Mask**, and **Default Gateway** on the **Ports** tab.

NOTE This controller is referred to as the connected controller.

2 On the **Local Network** tab, at the top of the page, verify that the connected controller's **Mode**, **IP Address**, **Subnet Mask**, and **Default Gateway** are accurate.

3 Use the following settings to define the devices that you want to discover in the **Local Devices** table.

Local Devices	
Only Unconfigured	When checked, only discovers devices that do not have an IP address and are linked to the connected controller's network. When unchecked, discovers both configured and unconfigured devices.
Clear All	Erases all information in the table.
Export	Creates .csv file of the data in the table, limited to 256 devices.

4 Click **Discover** to populate the table with your i-Vu® XT or TruVu™ devices that are on a single network communicating with the connected i-Vu® XT or TruVu™ controller.

To auto-assign IP addresses to multiple devices at one time

1 Follow the above steps to **Discover** devices.

2 In the **Select** column, click the checkbox for the devices you want to assign addresses to.

NOTE To change the IP Address, the device's **Mode** must be **Custom Static**.

3 Enter the starting IP address under **Address** and click **Assign** to automatically assign sequential IP addresses.

There are different workflows for using the **Local Devices** table to address your devices, depending on the information you have from the installation. See *To address when you know the serial numbers* (page 18) or *To address when you do not know the serial numbers* (page 19).

Local Devices table	
Select	Check to select devices for: • Changing the Mode • Resolving a Mismatch • Auto-assigning an IP Address **NOTE** You cannot select devices with a lock symbol.
MAC	Ethernet MAC address of device
Serial#	The discovered devices are in order by serial number. **NOTE** To change how the rows are sorted, click a different column heading.

©2022 Carrier.
All rights reserved.

Local Devices table	
Mode	To change the **Mode:** **1** Select the devices you want to change. **2** Select one of the following IP addressing modes: • **Default IP** - Devices with rotary switches that are used when autogenerating the address (if applicable) • **Custom Static** - A permanent IP addresses which does not change and is usually obtained from the network administrator • **NOTE** Selecting this automatically sets the device's subnet and default gateway to match the connected controller. • **DHCP** - Allows the DHCP server to automatically assign an IP address **3** Click the **Set** button.
Address	Displays the IP address of the device, if assigned. You can edit the address only if the device is set to **Custom Static**. To auto-assign multiple sequential addresses, select the devices, enter the beginning address, and click **Assign**.
Location	You can describe the location of the device or any other helpful information.
Mismatch	A **Mismatch** occurs when the connected controller's mode is set to **Custom Static** and a discovered device's subnet and default gateway do not match the connected controller. The incorrect addresses are shown with **SN** for subnet and **GW** for default gateway. To resolve a mismatch, select the device(s) by clicking the **Select** checkbox and then clicking the **Resolve** button. The subnet mask and default gateway addresses of the selected devices change to match the connected controller.
Status	The following are the results of changing **Mode**, **Address**, **Location**, or pressing **Blink**: • **Success** - Successful operation • **No Response** - Device is not communicating • **Device Locked** - Device must be unlocked before you can make any changes using the **Local Devices** table. You can unlock the TV-VVTZC-E2 by pressing the DSC button on the device or by using the i-Vu® application. (See instructions above.) **NOTE** The status of a device changes to locked 24 hours after unlocking it. • **Failure** - A conflict between the device and the information entered
Blue dot	A blue dot appears for the most recent device to have the: • **Blink** button clicked in the table • **Address** or **Location** entered • DSC button pressed on the device **NOTE** If the device is not already listed in the table, pressing the DSC button immediately adds it to the table and displays a blue dot. **TIP** You can build a table of devices in the order that you've pressed the DSC buttons. Clear the table and then press each DSC button in turn. The devices will be listed in the table in the order in which the button was pressed, but only the most recent one will show the blue dot.

©2022 Carrier.
All rights reserved.

Local Devices table	
Blink	Click the **Blink** button to prompt the Locator LED to flash for 15 seconds, allowing you to verify the controller's physical location. After flashing, whenever the actuator moves, the LED rotates in the same direction. LED rotation is automatically disabled after 1 hour and can be re-enabled by pressing the **Blink** button again. At the same time, the **Sys** and **Net** LEDs blink white, once per second for 10 seconds, and then stop. **NOTES** • The blue dot appears when you **Blink** a device. • You can **Blink** a locked device.

NOTE If a device's IP address is the loopback address (127.0.0.1), it is considered unconfigured and unlocked. The IP address, subnet mask, and default gateway fields are blank in the **Ports** and **Local Network** tabs. You can configure it in the **Local Devices** table.

©2022 Carrier.
All rights reserved.

To communicate through the BACnet/Service port network

You can connect to the Comm/Service Port to access your network through the i-Vu® application.

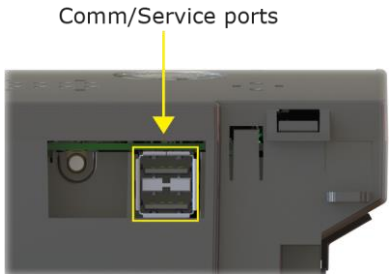

See *Addressing the TV-VVTZC-E2 through the Service port* (page 15) to set up your connection to the web browser if you haven't already.

1 Open a web browser on the computer and launch your i-Vu® application.

2 In the i-Vu® interface, on the **System Options** tree, select **Connections.**

3 On the **Properties** page > **Configure** tab, select **BACnet/IP Service Port Connection** from the drop-down list and click **Add**.

4 If needed, enter the **Service Port Network Number** as follows:

- **0** - the TV-VVTZC-E2 will communicate only with the computer or TruVu™ ET Display
- **1** to **65534** - the TV-VVTZC-E2's network number for network communication
- **65535** - searches for an available network number from 65531 to 65534. If any of these numbers are not available, you will have to assign a network number and enter it.

5 Click **Apply**.

6 On the right of the page, in the **Networks using selected connection** table, click the checkbox next to the network you want to connect to.

7 Click the **Start** button. The status changes to **Connected**.

NOTE If an error message appears, make sure the COM port you selected is not in use. For example, PuTTY may be open and holding the port open.

8 Click **Accept**.

9 Open a web browser on the computer and login to your i-Vu® Pro application.

10 In the i-Vu® Pro interface, on the **System Options** tree, select **Connections.**

11 On the **Properties** page > **Configure** tab, Select **BACnet/IP Service Port Connection** from the drop-down list and click **Add**.

12 If needed, enter the **Service Port Network Number** as follows:

- **0** - the TV-VVTZC-E2 will communicate only with the computer or TruVu™ ET Display
- **1** to **65534** - the TV-VVTZC-E2's network number for network communication
- **65535** - searches for an available network number from 65531 to 65534. If any of these numbers are not available, you will have to assign a network number and enter it.

©2022 Carrier.
All rights reserved.

13 Click **Apply**.

14 On the right of the page, in the **Networks using selected connection** table, click the checkbox next to the network you want to connect to.

15 Click **Apply**.

16 Select the **BACnet/IP Service Port Connection** and click **Start**. The status changes to **Connected**.

17 Click **Accept**.

18 On the navigation tree, right-click the controller that you are connected to and select **Module Status**. If a Modstat report appears, the i-Vu® application is communicating with the controller.

Wiring specifications

For...	Use...	Maximum Length
Ethernet - not daisy chained	Cat5e or higher Ethernet cable	328 feet (100 meters)
Ethernet - a daisy chain configuration	Cat5e or higher Ethernet cable	164 feet (50 meters)
MS/TP *	22 AWG, low-capacitance, twisted, stranded, shielded copper wire	2000 feet (610 meters)

* See the *MS/TP Networking and Wiring Technical Instructions*.

WARNINGS

- Do not apply line voltage (mains voltage) to the controller's ports and terminals.
- Do not exceed the minimum bend radius of the Cat5e or Cat6e Ethernet cable. Refer to Ethernet cable manufacturer specifications for minimum bend radius.

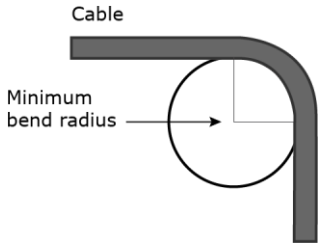

©2022 Carrier.
All rights reserved.

To communicate locally through the Rnet port

You can connect a computer running Field Assistant to the TV-VVTZC-E2's **Rnet** port to download or troubleshoot.

PREREQUISITES

- A computer with a USB port
- A USB Link (Part #USB-L)
- For the Field Assistant application to communicate with the controller, the controller must have been downloaded with at least its driver.
- A 3-pin screw terminal connector and 3-wire cable

CAUTIONS

- Maintain polarity when controllers share power.
- Failure to maintain polarity while using the USB Link on a computer that is grounded via its AC adapter may damage the USB Link and the controller.
- If multiple controllers share power but polarity was not maintained when they were wired, the difference between the controller's ground and the computer's AC power ground could damage the USB Link and the controller. If you are not sure of the wiring polarity, use a USB isolator between the computer and the USB Link. Purchase a USB isolator online from a third-party manufacturer. Plug the isolator into your computer's USB port, and then plug the USB Link cable into the isolator.

1 The USB Link driver is installed with a v6.5 or later system. Please refer to the Silicon Labs website and search "CP210x USB to UART Bridge VCP Drivers" for the most current device drivers. Install the driver before you connect the USB Link to your computer.

2 Connect one end of a piece of 3-wire cable to the 3-pin connector.

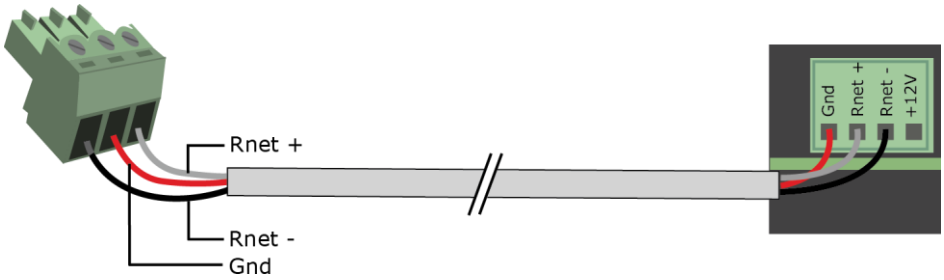

3 Connect the other end of the 3-wire cable to the TV-VVTZC-E2's **Rnet** port as shown in the drawing above in step 1.

4 Connect the 3-pin connector to the portion of the USB link kit shown in the drawing below, then connect the USB connector to the computer.

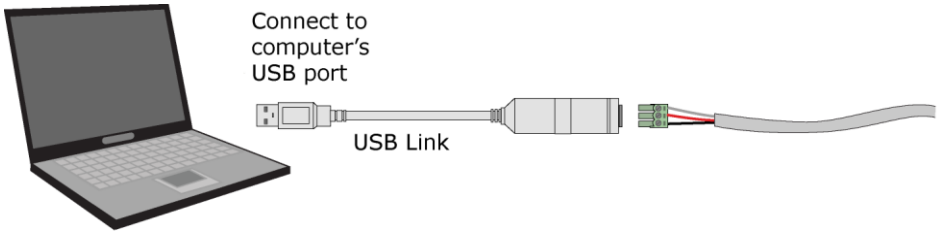

©2022 Carrier.
All rights reserved.

To set up a Local Access connection in the i-Vu® interface

For the i-Vu® Pro application to communicate with the **Rnet** port, you must do the following:

1 Click , select **System Options** > **Connections**.

2 On the **Configure** tab, click **Add**.

3 From the **Type** drop-down list, select **BACnet/Rnet Connection**.

4 Optional: Edit the **Description**.

5 Type the computer's **Port** number that the USB cable is connected to.

NOTE To find the port number, plug the USB cable into the computer's USB port, then select **Start** > **Control Panel** > **System** > **Device Manager** > **Ports (Com & LPT)**. The COM port number is beside **Silicon Labs CP210x USB to UART Bridge**.

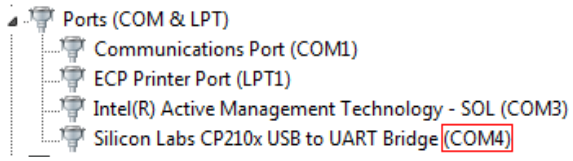

6 Set the **Baud** rate to 115200.

7 Click **Apply**.

8 On the right of the page, in the **Networks using selected connection** table, click the checkbox next to the network you want to connect to.

9 Click **Apply**.

10 Select **BACnet/Rnet Connection**, then click **Start**.

NOTE If an error message appears, make sure the COM port you selected is not in use. For example, PuTTY may be open and is holding the port open.

11 Click **Close**.

12 On the navigation tree, select the controller that you are connected to.

13 Click and select **Manual Command**.

14 Type `rnet here` in the dialog box, then click **OK**.

15 On the **Properties** page, click **Module Status**. If a Modstat report appears, the i-Vu® application is communicating with the controller.

©2022 Carrier.
All rights reserved.

Troubleshooting

If you have problems mounting, wiring, or addressing the TV-VVTZC-E2, contact Carrier Control Systems Support.

LEDs

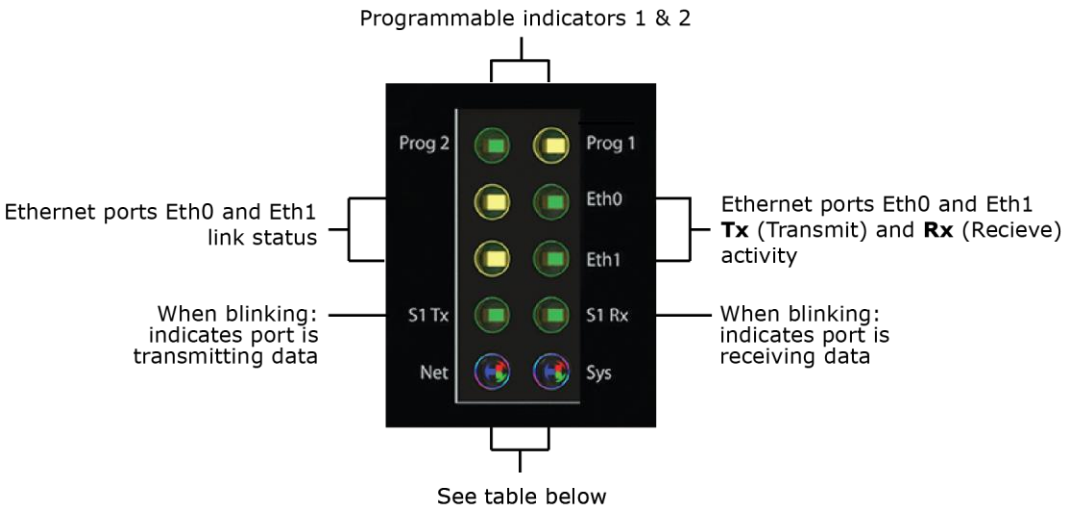

Net (Network Status) Tricolor LED

Color	Pattern	Condition	Message in Module Status	Possible Solutions
Red	On	Ethernet connection problem	No Ethernet Link	• Connect Ethernet Cable • Check other network components
Red	1 blink	One of the following BACnet/IP (Ethernet) DLL reporting issue: • Unable to create tasks • Unable to open socket for BACnet port	BACnet/IP error	Cycle power
Blue	On	One of the following issues: • Port communication firmware did not load properly • Port communication firmware is not running • Invalid protocol selected	MSTP firmware error	• Change protocol using USB Service Port • Cycle power

©2022 Carrier.
All rights reserved.

Color	Pattern	Condition	Message in Module Status	Possible Solutions
Blue	1 blink	Invalid address selected for protocol	Invalid address selection for MSTP	Change MAC address to unique address using USB Service Port
Blue	2 blink	Controller has same MAC address as another connected device	Duplicate address on MSTP	Change MAC address to a unique value using USB Service Port to valid address
Blue	3 blink	Controller is the only device on the network	No other devices detected on MSTP	• Check that network cable is connected properly • Check that baud rate is correct
Blue	4 blink	Excessive errors detected over 3 second period	Excessive communication errors on MSTP	• Check that network cable is connected properly • Check that baud rate is correct
Green	On	All enabled networks are functioning properly	No errors	No action required
Magenta		Operating system changes are downloading **WARNING** This process could take several minutes. Do NOT power off the controller during the download.	N/A	No action required

Sys (System Status) Tricolor LED

Color	Pattern	Condition	Message in Module Status	Possible Solution
Red	2 blink	Restarting after an abnormal exit	Auto restart delay due to system error on startup	After 5 minute delay has expired, if condition occurs again then cycle power
Red	4 blink	Firmware image is corrupt	Firmware error	Download driver again
Red	Fast blink	Firmware error has caused the firmware to exit and restart	Fatal error detected	No action required
Green	1 blink	No errors	Operational	No action required
Green	2 blink	Download of driver is in progress	Download in progress	No action required
Green	3 blink	BACnet Device ID is not set	Download required	Download the controller
Green	Fast blink	Installation of recently downloaded driver is occurring	N/A	No action required

©2022 Carrier.
All rights reserved.

Color	Pattern	Condition	Message in Module Status	Possible Solution
Blue	On	Controller is starting up	N/A	No action required
Blue	Slow blink	Linux (operating system) is starting up	N/A	No action required
Blue	Fast blink	Linux is running but it could not start the firmware application	N/A	Download driver
Magenta		Operating system changes are downloading **WARNING** This process could take several minutes. Do NOT power off the controller during the download.	N/A	No action required

To use the Locator LED

The Locator LED turns on when you: • power on the controller • change the driver • Click the **Blink** button		Click the **Blink** button to prompt the Locator LED to flash for 15 seconds, allowing you to verify the controller's physical location. After flashing, whenever the actuator moves, the LED rotates in the same direction. LED rotation is automatically disabled after 1 hour and can be re-enabled by pressing the **Blink** button again. The **Blink** button is in the: • controller setup **Local Network** tab > **Local Devices** table • i-Vu® interface on the **Driver** page. • In the Test & Balance tool on the **Test and Balance** tab.

©2022 Carrier.
All rights reserved.

To configure custom Prog 1/2 LEDs

You can customize the **Prog 1** and/or **Prog 2** LED for site-specific purposes by configuring the BACnet Analog Output (BAO) microblock.

Open your control program in the Snap interface, select the AO microblock for each LED, and use the following settings:

Status/Attribute	Microblock type	Expander number : Channel number	I/O type	Description
LED 1	BAO	0:61	Special	• <=0 Normal • >15 On The number of blinks equals the Present Value. The pulse pattern repeats after a 2-second delay LED will blink the number of times given in the BAO with ON pulse 0.5 seconds and OFF pulse 0.5 seconds.
LED 2	BAO	0:62	Special	• <=0 Normal • >15 On The number of blinks equals the Present Value. The pulse pattern repeats after a 2-second delay LED will blink the number of times given in the BAO with ON pulse 0.5 seconds and OFF pulse 0.5 seconds.

To get a Module Status report

A Module Status report provides information about the controller and verifies proper network communication with the controller. You can get this report:

- In the i-Vu® application—Right-click the controller on the navigation tree, then select **Module Status**.
- In the Field Assistant application—Right-click the controller in the navigation tree and select **Module Status**.
- On the controller setup **ModStat** tab—See *To set up the controller through the Service Port* (page 82).

See *Module Status field descriptions* (page 136) in the Appendix.

©2022 Carrier.
All rights reserved.

Troubleshooting inputs and outputs

The i-Vu® interface shows if you have I/O errors resulting from a misconfigured microblock.

To check for errors:

1 In the i-Vu® navigation tree, select the equipment controlled by the TV-VVTZC-E2.

2 On the **Properties** page, select the **I/O Points** tab.

3 Click the **Name** of any input or output whose name is red (indicates an error) to open its dialog box.

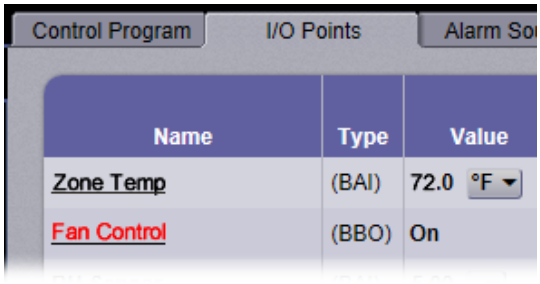

4 On the **Details** tab, scroll down to see the **Reliability** field under **BACnet Configuration**.

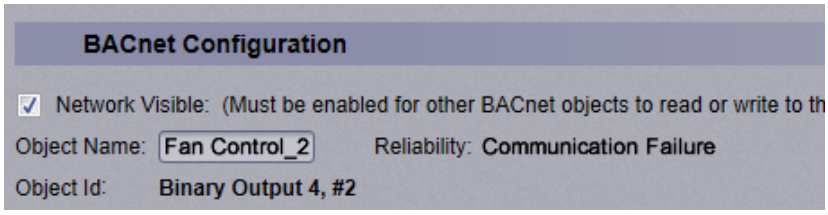

5 Anything other than **No Fault Detected** indicates an error. See the table below to determine the error and possible actions to take.

Reliability description	Possible error	Verify that...
Configuration Error	• The microblock's **I/O Type** and **Sensor/Actuator Type** are not compatible.	• The **I/O Type** and **Sensor/Actuator Type** combination is valid for the I/O number and microblock type.
	• The output's DIP switch setting does not match the connected device.	• The DIP switch setting is appropriate for the output and microblock type.
	• Invalid expander address or I/O number.	• The expander is present and functional at the address shown in the i-Vu® interface and that I/O number is valid.
Over Range	• Input exceeds the **Min/Max** limits.	• The input is within the **Min/Max** limits.
No Sensor	• No device is attached to the output.	• The device is present and functioning.
Shorted Loop	• Internal voltage feedback does not correspond with commanded value.	• The load on the output is within the valid range. • A voltage/current source has not been connected to an output.

©2022 Carrier.
All rights reserved.

Reliability description	Possible error	Verify that...
Open Loop	• Internal current feedback does not correspond with commanded value.	• The load on the output is within the valid range. • A voltage/current source has not been connected to an output.
Unreliable Other	• Feedback does not correspond with commanded value (for example, the output relay is not in commanded state).	• Device may be faulty. Contact Carrier Control Systems Support.

To get a Device Log

If Carrier Control Systems Support instructs you to get the controller's Device Log containing diagnostic information for troubleshooting:

1 Select the TV-VVTZC-E2 in the i-Vu® navigation tree.

2 On the **Properties** page, click **Device Log**.

NOTE You can click **Device Log Archive** to download a file containing multiple Device Logs to your computer. This also contains any network packet captures that have been run from the *Network Diagnostics - Packet Captures* (page 77) driver page.

To get the TV-VVTZC-E2's serial number

If you need the controller's serial number when troubleshooting, the number is on:

- A Module Status report (Modstat) under **Core** (or **Main**) **board hardware**

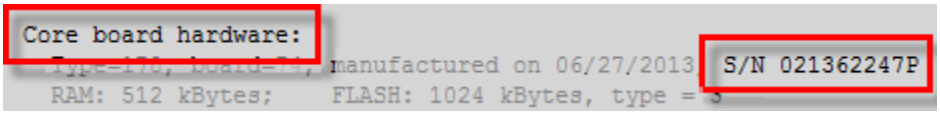

- A QR code, serial number, and MAC address printed on a sticker on the cover
- A laser-etched number and QR code on the inside circuit board.

See *To get a Module Status report* (page 95).

©2022 Carrier.
All rights reserved.

To take the TV-VVTZC-E2 out of service

If needed for troubleshooting or start-up, you can prevent the i-Vu® application from communicating with the TV-VVTZC-E2 by shutting down communication from the TV-VVTZC-E2 to the i-Vu® application. When **Out of Service**, i-Vu® no longer communicates properties, colors, trends, etc.

1 On the i-Vu® navigation tree, select the TV-VVTZC-E2.

2 On the **Properties** page, check **Out of Service**.

3 Click **Accept**.

To replace the TV-VVTZC-E2's fuse

The TV-VVTZC-E2 has one fuse. If the TV-VVTZC-E2's power LED is not lit, this could be due to a blown power fuse.

If you suspect a fuse is blown, remove the fuse as described below, and use a multimeter to check it. If the fuse is blown, try to determine why it blew before you replace it. Check the power wiring polarity of the TV-VVTZC-E2 and any other devices that share the power supply. Use the same polarity for all of them.

You can purchase the 3 A, fast-acting, 5mm x 20mm glass fuse from Littelfuse, mfr part #0235003.HXP.

To replace the fuse:

1 Remove the cover to remove the red power connector.

2 Press a small flathead screwdriver into the fuse slot, press inward, and turn the screw ¼ turn counter-clockwise. This springs the fuse holder slightly away from the controller.

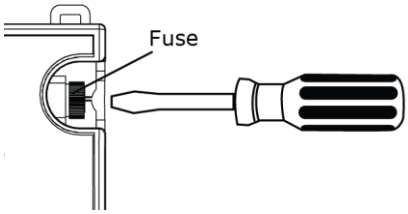

3 Remove the fuse holder.

4 Remove the blown fuse from the fuse holder.

5 Insert the new fuse into the fuse holder.

6 Place the fuse holder back into the TV-VVTZC-E2 and turn it ¼ turn clockwise.

7 Replace the power connector and cover.

8 Verify the LEDs on the TV-VVTZC-E2 are lit.

©2022 Carrier.
All rights reserved.

To revert to default settings

WARNING This erases all archived information and user-configuration settings. When recovery is complete, you have to reconfigure all custom settings. You must connect locally to the TV-VVTZC-E2 and manually reconfigure all the communications and firewall information. We highly recommend that you revert the defaults settings only under the guidance of Carrier Control Systems Support.

To erase volatile memory data and restore factory default configuration settings, use AppLoader to download the appropriate clipping.

See the *AppLoader User Guide* for details.

©2022 Carrier.
All rights reserved.

Compliance

FCC Compliance

This device complies with Part 15 of the FCC Rules. Operation is subject to the following two conditions:

1 This device may not cause harmful interference.

2 This device must accept any interference received, including interference that may cause undesired operation.

NOTE This equipment has been tested and found to comply with the limits for a Class A digital device, pursuant to Part 15 of the FCC Rules. These limits are designed to provide reasonable protection against harmful interference when the equipment is operated in a commercial environment. This equipment generates, uses, and can radiate radio frequency energy, and if it is not installed and used in accordance with this document, it may cause harmful interference to radio communications. Operation of this equipment in a residential area is likely to cause harmful interference, in which case the user will be required to correct the interference at his own expense.

CAUTION Any modifications made to this device that are not approved by Carrier will void the authority granted to the user by the FCC to operate this equipment.

CE and UKCA Compliance

WARNING This is a Class B product. In a light industrial environment, this product may cause radio interference in which case the user may be required to take adequate measures.

Industry Canada Compliance

This Class A digital apparatus complies with Canadian ICES-003.
Cet appareil numérique de la classe A est conforme à la norme NMB-003 du Canada.

BACnet Compliance

Compliance of listed products to requirements of ASHRAE Standard 135 is the responsibility of BACnet International. BTL® is a registered trademark of BACnet International.

©2022 Carrier.
All rights reserved.

Appendix A: TV-VVTZC-E2 Points/Properties

NOTE Engineering units shown in this document in the defaults and ranges are strictly for reference. You must enter an integer only.

Status

Navigation: i-Vu® / Field Assistant: **Properties** > **Control Program** > **Status**

Point Name/Description	Range
Terminal Mode – The controller's current operating status.	R: Off Heating Warm-up Vent Cooling Dehumidify Reheat Pressurize Evacuate Shutdown IAQ Override Air Balancing
Terminal Type – The type of zone terminal that the controller is installed on.	R: Single Duct Parallel Fan Series Fan
Space Temperature - Prime Variable – The space temperature value currently used for control.	R: -56 to 245°F (-48.9 to 118.3°C)
Damper Position – The current damper position.	R: 0 to 100%
Supply Air Temperature – Displays the current supply air temperature.	R: -56 to 245°F (-48.9 to 118.3°C)
Heating Capacity – The current reheat capacity when the zone is configured for reheat.	R: 0 to 100%
Baseboard Heating Capacity – The current modulating baseboard heat capacity when the zone is configured for Combination Baseboard and Ducted Heat.	R: 0 to 100%
Outdoor Air Temperature – The current outdoor air temperature from a linked air source, if available, or from another network source.	R: -56 to 245°F (-48.9 to 118.3°C)
Fan – The status of the terminal fan if **Term Type** is **Parallel Fan** or **Series Fan**.	R: On/Off
Space Relative Humidity – The current space relative humidity if **Service Configuration** > **Hardwired Sensor** is set to **RH Sensor** or, you have a valid ZS RH sensor.	R: 0 to 100%rh
Indoor Air Quality CO2 (ppm) – The current IAQ value if **Service Configuration** > **Hardwired Sensor** is set to **CO2 Sensor** or, you have a valid ZS CO^2 sensor.	R: 0 to 5000ppm
Shutdown – When **Active**, disables all control functions, at normal equipment time delays and close the damper.	D: Inactive R: Inactive/Active

©2022 Carrier.
All rights reserved.

Point Name/Description	Range
Hot Water Valve Cmd - The current commanded position of the 2-Position valve.	R: Open/Close
Hot Water Valve Cmd - The current commanded position of the Modulating valve.	R: 0 to 100%
Smart Valve Cmd – The current commanded position of the Smart Valve.	R: 0 to 100%
Smart Valve Pos – The current position of the Smart Valve.	R: 0 to 100%

Unit Configuration

Navigation: i-Vu® / Field Assistant: **Properties** > **Control Program** > **Configuration** > **Unit Configuration**

Point Name/Description	Default/Range
Heat Enable – Enables the reheat function.	D: Enable R: Disable/Enable
Parallel Fan Heat On Delay – Parallel type terminal only. The delay before reheat is enabled after the zone has a heating demand. The terminal fan runs immediately and attempts to meet the heating demand using the heated air from the ceiling plenum.	D: 15 min R: 0 to 60 min
Fan Off Delay – Fan-type terminals only. The amount of time the terminal fan continues to operate after a heating demand is satisfied.	D: 120 seconds R: 0 to 180 seconds
Maximum Heating SAT – The maximum supply air temperature allowed while ducted heat is operating. Ducted type supplemental heat is controlled so that it will not exceed this limit or the configured **High SAT Alarm Limit**. Set the **Maximum Heating SAT** limit to 5°F (2.8°C) above the desired maximum supply air temperature you would expect. Refer to **Alarm Configuration** > **High SAT Alarm Limit** to properly set this parameter.	D: 90°F (32.2°C) R: 80 to 140°F (26.6 to 60°C)
Maximum RH Override Position – The maximum damper position that the RH function can override the damper to. When active, the damper modulates to the temperature control position, RH override position, or the IAQ override position, whichever is greater.	D: 60% R: 0 to 100%
DCV Max Vent Damper Pos – The maximum damper position that the IAQ function can override the damper to. When active, the damper modulates to the temperature control position or the IAQ override position, whichever is greater.	D: 70% R: 0 to 100%
Filter Service Alarm Timer – Fan type terminals only. The amount of time the fan will run before generating a **Filter Alarm**. Set to 0 to disable the alarm.	D: 0 hr R: 0 to 9999 hr

©2022 Carrier.
All rights reserved.

Point Name/Description	Default/Range
T55 Pushbutton Override – Enables or disables the use of a pushbutton override from a local space temperature sensor.	D: Enable R: Disable/Enable
Setpoint Adjustment – Enables or disables the setpoint adjustment mechanism on the local space sensor.	D: Enable R: Disable/Enable
Setpoint Adjustment Range - The maximum amount that a user can adjust the setpoint on the local ZS or SPT sensor.	D: 2Δ°F (1.1Δ°C)
Heating Lockout Temperature – Supplemental reheat is disabled if outside air temperature exceeds this value. Supplemental reheat is enabled when the outside air temperature falls below a fixed hysteresis of 2Δ°F (1.1Δ°C). This function is active only if there is a valid network outside air temperature.	D: 70°F (21.1°C) R: 35 to 150°F (1.6 to 65.5°C)
Power Fail Restart Delay – How long the controller delays normal operation after the power is restored. This is typically used to prevent excessive demand when recovering from a power failure. Applies to Series Fan start delay when system mode transitions from unoccupied to occupied. A delay of no greater than 120 seconds is recommended for Series Fan applications.	D: 60 seconds R: 0 to 600 seconds
Occupancy Schedules – If **Enabled**, the controller stores and follows a schedule sent over the network or programmed locally through a touchscreen or Field Assistant. If **Disabled**, the controller occupancy is controlled from the **BAS On/Off** or **System Occupancy** network point.	D: Enable R: Disable/Enable
Occ Override Delay – The amount of time the controller remains occupied after the remote occupancy switch returns to the unoccupied position.	D: 15 minutes R: 0 to 240 minutes
Smart Valve Max Pos – The maximum position that the Smart Valve will control to.	D: 100% R: 0 to 100%
T55 Override Duration – The amount of time that the controller runs in the occupied mode when a user presses the T55 sensor's override button for 1 to 10 seconds. **Pushbutton Override** must be set to **Enable**.	D: 1 hr R: 1 to 4 hr
Environmental Index Enable – If enabled, when a zone is occupied, it monitors the deviation of space temperature from effective heating and cooling setpoint range. It monitors optional relative humidity if **RH Control** is set to **Enable** and/or monitors CO_2 if **DCV Control** is set to **Enable**.	D: Enable R: Disable/Enable

©2022 Carrier.
All rights reserved.

Point Name/Description	Default/Range
Local Sensor Calibration	
Space Temperature – The current space temperature.	R: -56 to 245°F (-48.9 to 118.3°C)
Space Temp Calibration – A calibration offset value to allow the local space temperature sensor to be adjusted to match a calibrated standard measuring the temperature in the same location.	D: 0Δ°F/Δ°C R: -9.9 to 10Δ°F (-5.5 to 5.5Δ°C)
Supply Air Temperature – Displays the current supply air temperature.	R: -56 to 245°F (-48.9 to 118.3°C)
Supply Air Temp Calibration – A calibration offset value to allow the supply air temperature sensor to be adjusted to match a calibrated standard measuring the temperature in the same location.	D: 0Δ°F/Δ°C R: -9.9 to 10Δ°F (-5.5 to 5.5Δ°C)
Space Relative Humidity – Displays the current value of relative humidity sensor, if present.	R: 100%0 to 100%
Relative Humidity Calibration – You can enter a calibration offset for the relative humidity. The offset is added to or subtracted from the controller's RH input value, and the calculated value is shown in the **Status** > **Space Relative Humidity**.	D: 0% R: -15 to 15%rh

©2022 Carrier.
All rights reserved.

Setpoints

Navigation: i-Vu® / Field Assistant: **Properties** > **Control Program** > **Configuration** > **Setpoints**

Select a color band on the setpoint graph to see the current setpoints in the **Heating** and **Cooling** fields. The values in this graphic are Fahrenheit. See setpoint descriptions below.

NOTE This graphic is an example only. Your setpoints may differ.

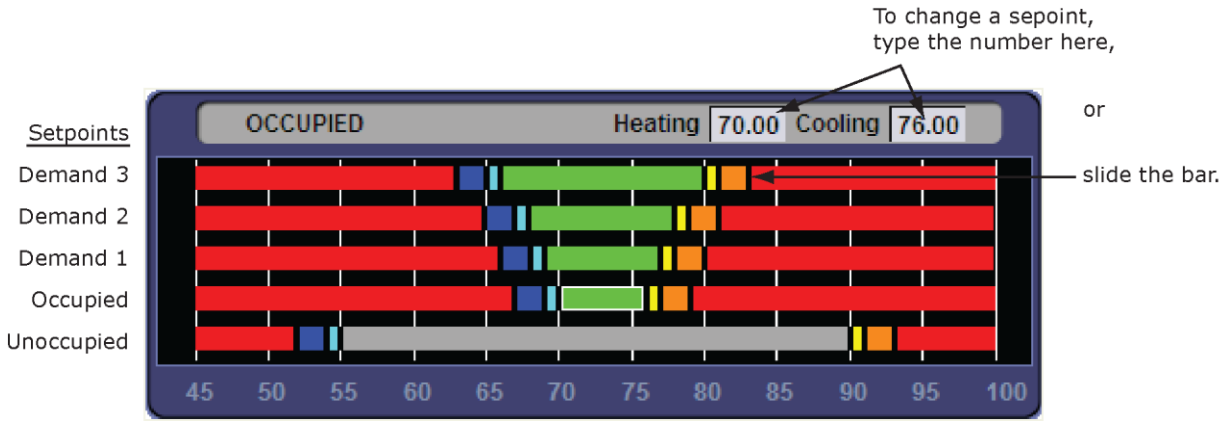

Occupied Setpoints

The occupied setpoints described below are the setpoints under normal operating conditions. The Demand Level 1–3 setpoints apply if demand limiting is used.

Demand limiting is a cost-saving strategy to reduce energy consumption. The strategy expands the occupied heating and cooling setpoints when the system reaches one of 3 levels of consumption. With the expanded setpoints, the equipment works less, thereby saving energy. By default, Demand Level 1 expands the occupied heating and cooling setpoints by 1Δ°F (Δ.5°C), Demand Level 2 by 2Δ°F (1.1Δ°C), and Demand Level 3 by 4Δ°F (2.2Δ°C). If the occupied heating or cooling setpoints change, the (effective) demand level setpoints automatically change by the same amount. See *Sequence of Operation* (page 58) for more information.

Point Name/Description	Default **Range:** -40 to 245°F (-40 to 118.3°C) Occupied		Demand Level 1	2	3
Occupied Heating – Green The heating setpoint the controller maintains while in occupied mode.	D: R:	70°F (21.1°C) 40 to 90°F (4.4 to 32.2°C)	69°F (20.5°C)	68°F (20°C)	66°F (18.9°C)
Occupied Cooling – Green The cooling setpoint the controller maintains while in occupied mode.	D: R:	76°F (24.4°C) 55 to 99°F (12.7 to 37.2°C)	77°F (25°C)	78°F (25.5°C)	80°F (26.6°C)

©2022 Carrier.
All rights reserved.

Point Name/Description	Default **Range:** -40 to 245°F (-40 to 118.3°C) Occupied	Demand Level 1	 2	 3
Occupied Heating 1 – Light Blue The space temperature must be less than the **Occupied Heating 1** setpoint for the VVT Master to consider the zone a heating caller in a linked system. In a single-zone application, the heating requirement begins as soon as the space temperature falls below the **Occupied Heating** setpoint. We recommend that the **Occupied Heating 1** value be set no less than 0.5Δ°F (.27Δ°C) below the **Occupied Heating** setpoint.	69°F (20.5°C)	68°F (20°C)	67°F (19.4°C)	65°F (18.3°C)
Occupied Heating 2 – Dark Blue The space temperature must be less than the **Occupied Heating 2** setpoint to generate a low space temperature alarm. We recommend that this value be set no less than 0.5Δ°F (.27Δ°C) below the **Occupied Heating 1** setpoint.	67°F (19.4°C)	66°F (18.9°C)	65°F (18.3°C)	63°F (17.2°C)
Occupied Cooling 1 – Yellow The space temperature must be greater than the **Occupied Cooling 1** setpoint for the VVT Master to consider the zone a cooling caller in a linked system. In a single-zone application, the cooling requirement begins as soon as the space temperature exceeds the **Occupied Cooling** setpoint. We recommend that the **Occupied Cooling 1** value be set no less than 0.5Δ°F (.27Δ°C) above the **Occupied Cooling** setpoint.	77°F (25°C)	78°F (25.5°C)	79°F (26.1°C)	81°F (27.2°C)
Occupied Cooling 2 – Orange The space temperature must be greater than the **Occupied Cooling 2** setpoint to generate a high space temperature alarm. We recommend that this value be set no less than 0.5Δ°F (.27Δ°C) above the **Occupied Cooling 1** setpoint.	79°F (26.1°C)	80°F (26.6°C)	81°F (27.2°C)	83°F (28.3°C)

Unoccupied Setpoints	
Point Name/Description	**Default/Range**
Unoccupied Heating – Gray The heating setpoint the controller maintains while in unoccupied mode.	D: 55°F (12.7°C) R: 40 to 90°F (4.4 to 32.2°C)
Unoccupied Cooling – Gray The cooling setpoint the controller maintains while in unoccupied mode.	D: 90°F (32.2°C) R: 45 to 99°F (7.2 to 37.2°C)
Unoccupied Heating 1 – Light Blue The space temperature must be less than the **Unoccupied Heating 1** setpoint for the VVT Master to consider the zone an unoccupied heating caller in a linked system. In a single-zone application, the unoccupied heating requirement begins as soon as the space temperature falls below the **Unoccupied Heating** setpoint. We recommend that the **Unoccupied Heating 1** value be set no less than 0.5Δ°F (.27Δ°C) below the **Unoccupied Heating** setpoint.	D: 54°F (12.2°C) R: 40 to 90°F (4.4 to 32.2°C)

©2022 Carrier.
All rights reserved.

Unoccupied Heating 2 – Dark Blue The space temperature must be less than the **Unoccupied Heating 2** setpoint to generate an unoccupied low space temperature alarm. We recommend that this value be set no less than 0.5Δ°F (.27Δ°C) below the **Unoccupied Heating 1** setpoint.	D: 52°F (11.1°C) R: 40 to 90°F (4.4 to 32.2°C)
Unoccupied Cooling 1 – Yellow The space temperature must be greater than the **Unoccupied Cooling 1** setpoint for the VVT Master to consider the zone an unoccupied cooling caller in a linked system. In a single-zone application, the unoccupied cooling requirement begins as soon as the space temperature exceeds the **Unoccupied Cooling** setpoint. We recommend that the **Unoccupied Cooling 1** value be set no less than 0.5Δ°F (.27Δ°C) above the **Unoccupied Cooling** setpoint.	D: 91°F (32.7°C) R: 45 to 99°F (7.2 to 37.2°C)
Unoccupied Cooling 2 – Orange The space temperature must be greater than the **Unoccupied Cooling 2** setpoint to generate an unoccupied high space temperature alarm. We recommend that this value be set no less than 0.5Δ°F (.27Δ°C) above the **Unoccupied Cooling 1** setpoint.	D: 93°F (33.9°C) R: 45 to 99°F (7.2 to 37.2°C)

Point Name/Description	**Default/Range**
Heating Capacity – Used for Optimal Start, this is the rate at which the space temperature changes when the heating system runs at full capacity to maintain designed occupied heating setpoint.	D: 5Δ°F (2.7Δ°C)/hr R: 0 to 120Δ°F (0 to 66.6Δ°C)/hr
Heating Design Temp – The geographically-based outdoor air temperature at which the heating system must run constantly to maintain comfort. This information is available in ASHRAE publications and most design references.	D: 0°F/C R: -100 to 150°F (-73.3 to 65.5°C)
Cooling Capacity – Used for Optimal Start, this is the rate at which the space temperature changes when cooling system runs at full capacity to maintain designed occupied cooling setpoint.	D: 5Δ°F (2.7Δ°C)/hr R: 0 to 140Δ°F (0 to 77.7Δ°C)/hr
Cooling Design Temp – The geographically-based outdoor air temperature at which the cooling system must run constantly to maintain comfort. This information is available in ASHRAE publications and most design references.	D: 100°F (37.7°C) R: -100 to 150°F (-73.3 to 65.5°C)

©2022 Carrier.
All rights reserved.

Hysteresis – The desired difference between the temperature at which the zone color changes as the space temperature departs from the acceptable range between the heating and cooling setpoints (green) into the Cooling 1 (yellow) or Heating 1 (light blue) and the temperature at which the zone color changes back to the acceptable range between the heating and cooling setpoints. For example, the following graph shows the zone color that results as the space temperature departs from and returns to the acceptable range in a zone with the following settings: • Color Change Hysteresis = .5Δ°F (.27Δ°C) (applies as the temperature returns to the acceptable range) • Occupied cooling setpoint = 76°F (24.4°C) • Occupied heating setpoint = 70°F (21.1°C) **NOTE** The values in the graph below are Fahrenheit. 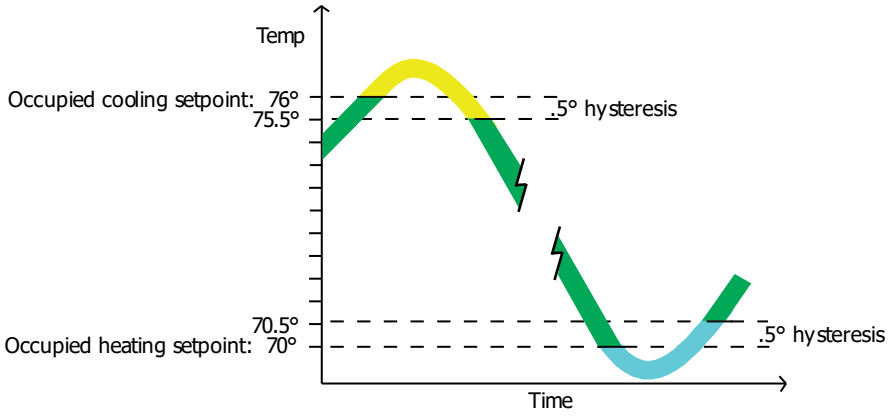	D: .5Δ°F (.27Δ°C) R: 0.2 to 1.0Δ°F (.1 to .5Δ°C)

Learning Adaptive Optimal Start

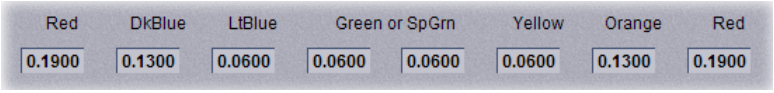

When the Learning Adaptive Optimal Start algorithm runs, the learned heating capacity or learned cooling capacity values are adjusted based on the color that is achieved when occupancy begins. The adjustment amounts for each color are displayed in the thermographic color fields (shown above with English default values).

Point Name/Description	Range English	Metric
Red – The amount the zone's learned heating capacity is adjusted when the Learning Adaptive Optimal Start algorithm runs, when the zone's thermographic color at occupancy is red.	D: 0.1900 R: 0 to 1	.1055
DkBlue – The amount the zone's learned heating capacity is adjusted when the Learning Adaptive Optimal Start algorithm runs, when the zone's thermographic color at occupancy is dark blue.	D: 0.1300 R: 0 to 1	.0722

©2022 Carrier.
All rights reserved.

Point Name/Description	Range English	Metric
LtBlue – The amount the zone's learned heating capacity is adjusted when the Learning Adaptive Optimal Start algorithm runs, when the zone's thermographic color at occupancy is light blue.	D: 0.0600 R: 0 to 1	.0333
Green – The amount the zone's learned heating capacity is adjusted when the Learning Adaptive Optimal Start algorithm runs, when the zone's thermographic color at occupancy is green.	D: 0.0600 R: 0 to 1	.0333
SpGrn – The amount the zone's learned cooling capacity is adjusted when the Learning Adaptive Optimal Start algorithm runs, when the zone's thermographic color at occupancy is green.	D: 0.0600 R: 0 to 1	.0333
Yellow – The amount the zone's learned cooling capacity is adjusted when the Learning Adaptive Optimal Start algorithm runs, when the zone's thermographic color at occupancy is yellow.	D: 0.0600 R: 0 to 1	.0333
Orange – The amount the zone's learned cooling capacity is adjusted when the Learning Adaptive Optimal Start algorithm runs, when the zone's thermographic color at occupancy is orange.	D: 0.1300 R: 0 to 1	.0722
Red – The amount the zone's learned cooling capacity is adjusted when the Learning Adaptive Optimal Start algorithm runs, when the zone's thermographic color at occupancy is red.	D: 0.1900 R: 0 to 1	.1055

Heating – (Occupied or Unoccupied, depending on mode) The current programmed **Heating** setpoint adjusted by any offset that may be in effect.	R: 0 to 120°F (-17.7 to 48.9°C)
Cooling – (Occupied or Unoccupied, depending on mode) The current programmed **Cooling** setpoint adjusted by any offset that may be in effect.	R: 0 to 120°F (-17.7 to 48.9°C)
Learned cooling capacity – The cooling capacity learned by Learning Adaptive Optimal Start that is required to bring the space temperature down to the occupied cooling setpoint prior to the occupied time.	R: _°F/C
Learned heating capacity – The heating capacity learned by Learning Adaptive Optimal Start that is required to bring the space temperature up to the occupied heating setpoint prior to the occupied time.	R: _°F/C
Min Setpoint Separation – Minimum separation that must be maintained between the heating and cooling setpoints.	R: _°F/C
Optimal Start – The number of hours prior to occupancy, at which the Optimal Start function may begin to adjust the effective setpoints to achieve the occupied setpoints by the time scheduled occupancy begins. Enter 0 to disable Optimal Start. **NOTE** Optimal Start is automatically disabled when occupancy is controlled by a network write to the controller's keypad_ovrde variable. (Display name: **BAS On/Off**, in **Properties** > **Control Program** > **Maintenance** > **Occupancy** > **BAS On/Off**. or when utilizing **Airside Linkage** or the **System Occupancy Network Variable**.	D: 1 hr R: 0 to 4 hrs

©2022 Carrier.
All rights reserved.

Optimal Start Type – The method used to change from unoccupied to occupied setpoint. Options: **None*** – Unit will not change to occupied setpoint until the scheduled time or the unit goes into an occupied mode. Setpoints do not ramp, but change immediately from unoccupied to occupied values. **Temp Compensated*** – Unit changes to occupied setpoints at a variable time prior to the occupied time, which is calculated by the current difference between space temperature and the appropriate heating or cooling setpoint. At that time, the setpoints do not ramp, but change immediately from unoccupied to occupied values. **Learning Adaptive Start** – Unit gradually changes to occupied setpoints by adjusting the unoccupied setpoints over a specified period of time to achieve the occupied setpoint by the time scheduled occupancy begins.	D: Temperature Compensated R: None Temperature Compensated Learning Adaptive
Heat Start K factor (min/deg) – If **Optimal Start Type** is **Temp Compensated**, this is the time in minutes per degree that the equipment starts before the occupied period when the space temperature is below the occupied heating setpoint (including any setpoint offset).	D: 15 min/deg 27 min/deg (metric) R: 0 to 99
Cool Start K factor (min/deg) – If **Optimal Start Type** is **Temp Compensated**, this is the time in minutes per degree that the equipment starts before the occupied period when the space temperature is above the occupied cooling setpoint (including any setpoint offset).	D: 15 min/deg 27 min/deg (metric) R: 0 to 99
Standby Offset – The value by which the occupied setpoints are expanded when the space occupancy sensor indicates that a zone is unoccupied. If 0, the unoccupied setpoints are used.	D: 0°F/C R: 0 to 15Δ°F (0 to 8.3Δ°C)
Occupied RH Control Setpoint – If **Optional Sensor Type** is set to **RH Sensor** and **RH Control** is set to **Enable**, this is the relative humidity setpoint during occupancy. The air source mode must be **Cool** or **Vent** and the terminal mode must be **Cooling** or **Vent** before the dehumidification function can be active.	D: 60%rh R: 0 to 100%rh
DCV Start Ctrl Setpoint – If **Optional Sensor Type** is set to **IAQ Sensor** and **DCV Control** is set to **Enable**, this is the value that the CO2 sensor must exceed to begin the DCV control function. This value should be set to approximately 75 ppm above the outdoor air CO2 level.	D: 500ppm R: 0 to 9999 ppm
DCV Max Ctrl Setpoint – If **Optional Sensor Type** is set to **IAQ Sensor** and **DCV Control** is set to **Enable**, this is the value that the CO2 level must exceed to begin the IAQ function to control the damper to **DCV MAX Vent Airflow**.	D: 1000ppm R: 0 to 9999 ppm
Parallel Fan ON Value – If **Terminal Type** is **Parallel Fan** and the zone does not require heating, when the zone's target damper position decreases below this value, the parallel fan turns on to increase airflow, ventilation, and prevent cold air dumping into the zone. If the zone's target damper position rises above this value by more than 1%, the parallel fan turns off. We recommend this value be set to approximately 10% above the **Occupied Min Damper Position** setpoint. Set to 0 to disable this function.	D: 25% R: 0 to 100%

©2022 Carrier.
All rights reserved.

Setpoints for ZS and wireless sensors

Setpoints for ZS and wireless sensors	
To configure setpoint properties for ZS or wireless sensors, **Ctrl+click** anywhere on the **Zone Setpoints:** graph at the top of the **Setpoints** section in order to access the **Properties** microblock popup. 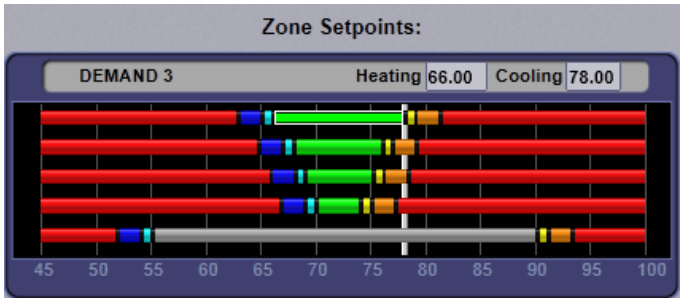	
In the popup, on the **Properties** > **Sensor** tab, configure ZS or wireless sensors for **Setpoint Adjust**. 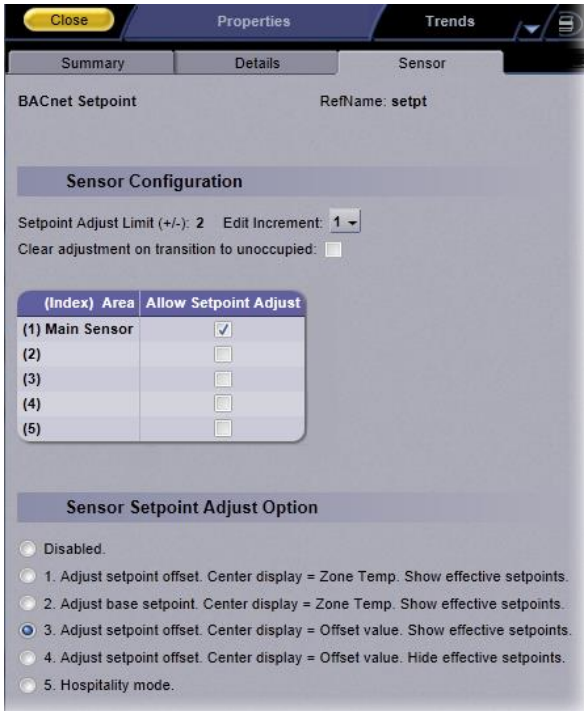	
Edit Increment – Amount of offset in degrees for each press of the up or down arrows on the ZS or wireless sensor for setpoint adjustment.	D: 1 R: 0.1 0.5 1
Allow Setpoint Adjust – Check to allow setpoint adjustments on the specified ZS or Carrier wireless sensor.	D: (1) enabled R: disabled/enabled
Sensor Setpoint Adjust Option – Check to select the ZS or wireless setpoint adjustment display.	D: 3

©2022 Carrier.
All rights reserved.

Alarm Configuration

Navigation: i-Vu® / Field Assistant: **Properties** > **Control Program** > **Configuration** > **Alarm Configuration**

Point Name/Description	Default/Range
Space Temperature Alarm	
Occupied Alarm Hysteresis – This value is added to the effective cooling setpoints and subtracted from the effective heating setpoints as output from the **Setpoint** microblock. These values establish the occupied high and low limits that the space temperature must exceed before an occupied SPT alarm is generated. The alarm returns to normal when the space temperature drops below the high effective setpoint or rises above the low effective setpoint.	D: 5Δ°F (2.7Δ°C) R: 0 to 20Δ°F (0 to 11.1Δ°C)
Alarm Delay (min/deg) – Determines the amount of delay before an occupied space temperature alarm is generated when the controller transitions to the occupied mode. The delay time equals this value multiplied by the difference between the sensor temperature and occupied alarm setpoint plus 15 minutes.	D: 10 min/deg R: 18 min/deg (metric) 0 to 30 minutes
Unoccupied Low SPT Alarm Limit –The value that the space temperature must drop below to generate a **Space Temperature Alarm** in the unoccupied mode. There is a fixed hysteresis of 1Δ°F (.5Δ°C) for return to normal.	D: 45°F (7.2°C) R: 35 to 90°F (1.6 to 32.2°C)
Unoccupied High SPT Alarm Limit – The value that the space temperature must exceed to generate a **Space Temperature Alarm** in the unoccupied mode. There is a fixed hysteresis of 1Δ°F (.5Δ°C) for return to normal.	D: 95°F (35°C) R: 45 to 100°F (7.2 to 37.7°C)
Supply Air Temperature Alarm	
Low SAT Alarm Limit – The value that the supply air temperature must drop below to generate a **Supply Air Temp Alarm**. There is a fixed hysteresis of 3Δ°F (1.6Δ°C) for return to normal.	D: 45°F (7.2°C) R: 15 to 90°F (-9.4 to 32.2°C)
High SAT Alarm Limit – The value that the supply air temperature must exceed to generate a **Supply Air Temp Alarm**. There is a fixed hysteresis of 3Δ°F (1.6Δ°C) for return to normal. This should be set at least 15Δ°F (8.3Δ°C) higher than the **Maximum Heating SAT**.	D: 120°F (48.9°C) R: 90 to 175°F (32.2 to 79.4°C)
Space Humidity Alarm	
Occupied High RH Alarm Limit – The value that the relative humidity sensor must exceed to generate a **Space Humidity Alarm** in the occupied mode if **RH Control** is set to **Enable**. There is a fixed hysteresis of 5%rh for return to normal.	D: 100%rh R: 45 to 100%rh
Alarm Delay (min/%RH) – Determines the amount of delay before an occupied RH alarm is generated when the controller transitions to the occupied mode. The delay time equals this value multiplied by the difference between the sensor RH value and the occupied RH setpoint plus 15 minutes.	D: 5 minutes R: 0 to 30 minutes
Unocc High RH Alarm Limit – The value that the relative humidity sensor must exceed to generate a **Space Humidity Alarm** in the unoccupied mode if **RH Control** is set to **Enable**. There is a fixed hysteresis of 5%rh for return to normal.	D: 100%rh R: 45 to 100%rh

©2022 Carrier.
All rights reserved.

Point Name/Description	Default/Range
IAQ/Ventilation Alarm	
Occupied High CO2 Alarm Limit – The value that the CO_2 sensor must exceed to generate an **Indoor Air Quality Alarm** in the occupied mode if **DCV Control** is set to **Enable**. There is a fixed hysteresis of 100ppm for return to normal.	D: 1100ppm R: 0 to 9999 ppm
Alarm Delay (min/ppm) – The fractional portion of a minute used to determine the amount of delay before an indoor air quality alarm is generated when the controller transitions to the occupied mode. The delay time equals this value multiplied by the difference between the sensor CO_2 value and the setpoint plus 15 minutes.	D: 0.25 minutes R: 0.10 to 1.00 minutes
Heating Valve Alarms	
Smart Valve Alarm Diff – The difference between the Smart Valve output command and the feedback input must be greater than this value for 1 minute to trigger the alarm.	D: 5% R: 0 to 100%
Heating Valve Cycling Alarm – Alarm occurs if the input cycles more than __ times in a __ min period. **NOTE** The input must reverse by more than __ to be counted. __ times D: 15 R: 0 to 999 in a __ min period D: 60 minutes R: 0 to 999 minutes The input must reverse by more than __ to be counted D: 5% R: 0 to 99%	
Heating Valve Failure Alarm – Alarm occurs if discharge air temp does not rise __ Δ°F within __ min after the heating coil valve command is > __ % Open. does not rise __Δ°F D: 2.5Δ°F (1.4Δ°C) R: 0 to 99Δ°F (0 to 55Δ°C) within __ min D: 15 minutes R: 0 to 999 minutes after the heating coil valve command is > **__%Open**. D: 80% Open R: 0 to 100% Open	
Alarms Displayed on ZS Sensor	
Space Temperature Alarm – If set to display, shows the alarm indicator on the communicating zone sensors, if the **Space Temperature** alarm is active.	D: Ignore R: Ignore/Display
Supply Air Temp Alarm – If set to display, shows the alarm indicator on the communicating zone sensors, if the **Supply Air Temp** alarm is active.	D: Ignore R: Ignore/Display

©2022 Carrier.
All rights reserved.

Point Name/Description	Default/Range
Dirty Filter Alarm – If set to display, shows the alarm indicator on the communicating zone sensors, if a **Filter** alarm is active.	D: Ignore R: Ignore/Display
Space High Humidity Alarm – If set to display, shows the alarm indicator on the communicating zone sensors with display, if the **Space Relative Humidity** alarm is active.	D: Ignore R: Ignore/Display
Space High CO2 Alarm – If set to display, shows the alarm indicator on the communicating zone sensors with display if the **Indoor Air Quality Alarm** is in alarm.	D: Ignore R: Ignore/Display
Maintenance Displayed on ZS Sensor	
Linkage Fault – If set to display, shows the maintenance indicator on the ZS Pro sensor if the Airside Linkage is in a Fault condition.	D: Ignore R: Ignore/Display
Net OAT Fault – If set to display, shows the maintenance indicator on the ZS Pro sensor if the Network Outside Air is not valid.	D: Ignore R: Ignore/Display
SPT Sensor Fault – If set to display, shows the maintenance indicator on the ZS Pro sensor if the space temperature sensor is not valid.	D: Ignore R: Ignore/Display

Service Configuration

Navigation: i-Vu® / Field Assistant: **Properties** > **Control Program** > **Configuration** > **Service Configuration**

Point Name/Description	Default/Range
Terminal Type – The type of zone terminal that the controller is installed on.	D: Single Duct R: Single Duct Parallel Series Fan
Damper Size (dia.) – Used by the VVT Master to calculate the weighted average demand. If the zone damper is round, enter its diameter. If rectangular, enter 0.	D: 6.00 in. (15.2 cm) R: 0 to 100.00 in./cm
Damper Area (area) – Used by the VVT Master to calculate the weighted average demand. If the damper is rectangular, enter its area (width x height). If the damper is round, enter 0.	D: 0 sq.in. (cm. sq.) R: 0 to 9999 sq.in. (cm. sq.)
Terminal Fan Airflow – Enter the terminal fan airflow in cfm (liters/second). Used in performance calculations only. Available only on fan-enabled terminal box.	D: 1000 cfm (472 liters/second) R: 0 to 99999 cfm (liters/second)

©2022 Carrier.
All rights reserved.

Point Name/Description	Default/Range
External Actuator Enable – Enable if the controller's analog output is used for an external high-torque or slave actuator. Enabling this setting disables the output for Modulating Hot Water or Combination reheat functions.	D: Disable R: Disable/Enable
Heat Type – The type of supplemental reheat that the zone controller will control. The heat may be used with system heat, depending on the space temperature demand. Options: **None** – no heat **Modulating** – ducted or baseboard modulating hot water **Two Position** – two position hot water **Staged EH** – ducted or baseboard electric heat **Combination** – combination baseboard modulating hot water and ducted staged electric heat **SCR Electric** – modulating control for SCR-type electric heater **Modulating Smart Valve** – ducted or baseboard modulating hot water using a Smart Valve **Combo Smart Valve** – combination baseboard modulating hot water using a Smart Valve and ducted staged electric heat	D: None R: None Modulating Two Position Staged EH Combination SCR Electric Modulating Smart Valve Combo Smart Valve
Ducted Heat – Determines whether the zone is using ducted heat or baseboard. If **Heat Type** is **Combination**, set this field to **Yes** for ducted heat.	D: Yes R: No/Yes
Number of Heat Stages – The number heat stages when the **Heat Type** is **Staged EH**. Fan powered terminals are limited to no more than 2 stages.	D: Two stages R: One stage Two stages Three stages
Valve Type – The hot water valve's position with no power applied to the valve.	D: NC R: NC/NO (normally closed/normally open)
Hardwired Sensor – The type of sensor used on the controller's **IN-01** hardwire input. This setting determines the control channel input function. Options: **RH Sensor –** Relative humidity for zone dehumidification **IAQ Sensor** – Indoor air quality for DCV control **NOTE** RH and IAQ are also available with communicating ZS RH and CO_2 sensors.	D: None R: None RH Sensor IAQ Sensor
RH Control – Enables or disables zone dehumidification control if valid RH sensor values are available.	D: Disable R: Disable/Enable
DCV Control – Enables or disables demand control ventilation control.	D: Disable R: Disable/Enable
Min Setpoint Separation – Minimum separation that must be maintained between the heating and cooling setpoints.	D: 4Δ°F (2.2Δ°C) R: 2 to 10Δ°F (1.1 to 5.5Δ°C)
Occ Override Normal Logic State – The normal state of the controller's **IN-04 Occupancy** input. If the input's contact is the same state as the configured state, the controller follows its controlling schedule. If the contact is in the opposite state of the configured state, the controller is forced into the unoccupied mode.	D: Open R: Open/Closed

©2022 Carrier.
All rights reserved.

Point Name/Description	Default/Range
RH Sensor Min Input Volts – The lowest voltage that should be read from the hardwired relative humidity (RH) sensor.	D: 0.00 V R: 0 to 5.00 V
RH Sensor Max Input Volts – The highest voltage that should be read from the hardwired RH sensor.	D: 5.00 V R: 0 to 5.00 V
RH Sensor Value @ Min Volts – The % relative humidity that correlates to the hardwired RH sensor's low voltage reading.	D: 0% R: 0 to 99%
RH Sensor Value @ Max Volts – The % relative humidity that correlates to the hardwired RH sensor's high voltage reading.	D: 100% R: 0 to 100%
CO2 Sensor Min Input Volts – The lowest voltage that should be read from the hardwired CO_2 sensor.	D: 1.00 V R: 0 to 5.00 V
CO2 Sensor Max Input Volts – The highest voltage that should be read from the hardwired CO_2 sensor.	D: 5.00 V R: 0 to 5.00 V
CO2 Sensor Value @ Min Volts – The ppm value that correlates to the hardwired CO_2 sensor's low voltage reading.	D: 0 ppm R: 0 to 9999 ppm
CO2 Sensor Value @ Max Volts – The ppm value that correlates to the hardwired CO_2 sensor's high voltage reading.	D: 2000 ppm R: 0 to 9999 ppm
PD (Pressure Dependent) Control :	
Damper Motor Travel Time – The actuator's travel time from full closed to full open. This field is fixed at 154 seconds.	D: 154 seconds
Direction Clockwise – If **Damper Actuator** is set to **Built-in actuator**, set this field to the damper's position when it rotates clockwise.	D: Close R: Close/Open
Target Damper Position - The current damper position. To override normal control for troubleshooting purposes, select **Lock value to** and then enter a value. The damper moves to that position until **Lock value to** checkbox is cleared.	R: 0 to 100%
Auxheat - The current configured **Reheat Min Damper Position**. To override normal control for reheat troubleshooting purposes, select **Lock value to** and then enter a value. The damper moves to that position until **Lock value to** checkbox is cleared.	R: 0 to 100%
Fan – The current value of the fan output relay. To override normal control for troubleshooting purposes, select **Lock value to** and then enter **On** or **Off**. The relay stays in that state until the **Lock value to** checkbox is cleared.	R: On/Off
Cooling Min Damper Position – The minimum damper position the terminal controls to when the air source mode is Cooling, Vent, or Free Cooling and the space requirements for cooling are at a minimum. We recommend that you set this no lower than 10%.	D: 20% R: 0 to 100%
Cooling Max Damper Position – The maximum damper position the terminal controls to when the air source mode is Cooling, Vent, or Free Cooling and the space requirements for cooling are at a maximum.	D: 100% R: 0 to 100%

©2022 Carrier.
All rights reserved.

Point Name/Description	Default/Range
Reheat Min Damper Position – For Single Duct units with ducted reheat. Set to the desired damper position at which the reheat will provide optimum performance. This value is compared to the **Cooling Min Damper Position** value, and the greater of the two values determines the damper position.	D: 45% R: 0 to 100%
Heating Min Damper Position – The minimum damper position the terminal controls to when the air source mode is Heat and the space requirements are at a minimum.	D: 20% R: 0 to 100%
Heating Max Damper Position – The maximum damper position the terminal controls to when the air source mode is Heat and the space requirements are at a maximum.	D: 20% R: 0 to 100%
Vent Position – The ventilation damper position the terminal controls to when the air source mode is Vent and the terminal mode is not in the Heat or Cool mode. If Linkage is not active, the zone determines vent mode by verifying that its SAT sensor is between 65°F (18.3°C) and 80°F (26.6°C).	D: 50% R: 0 to 100%
Test and Balance – Use the following command buttons when commissioning a zone, *balancing the system* (page 55), replacing the zone controller, or troubleshooting. If **Automatic Control** is not selected within 4 hours, the controller will resume normal control. **Calibrated Damper Close** – Forces the damper closed so the 0% damper position can be set. **Calibrated Damper Open** – Forces the damper to its maximum open position so that the 100% damper position can be set. **Cool Max** – Forces the damper to its cool maximum position regardless of its current local mode. **Cool Min** – Forces the damper to its cool minimum position regardless of its current local mode. **Automatic Control** – Returns the damper to its normal control routines. **This must be activated when you finish using any of the other Test and Balance commands.** **Damper Full Close** – Overrides the damper to its full closed position. **Heat Max** – Forces the damper to its heat maximum position regardless of its current local mode. **Heat Min** – Forces the damper to its heat minimum position regardless of its current local mode. **Reheat Min** – Forces the damper to its reheat position regardless of its current local position. **Vent** – Forces the damper to its ventilation position regardless of its current local mode.	

Sensor Binder / Zone Temp / Zone Humidity / ZS Zone CO2 **Ctrl+click** on the name of these properties to access the microblock popup **Properties** page > **Details** tab. See below for instructions on configuring your ZS or wireless sensors. See the microblock Help for more detailed explanations.	

©2022 Carrier.
All rights reserved.

Sensor Binder - Use the **Associated Sensors** table to configure the Rnet to use additional ZS or wireless sensors.

Index	Area	Network Type	Address	Lock Display	Version	Status	Error
1	Main Sensor	Rnet	1			Sensor Offline	No Comm
2	Sensor 2	Unused	2			Sensor Offline	None
3	Sensor 3	Unused	3			Sensor Offline	None
4	Sensor 4	Unused	4			Sensor Offline	None
5	Sensor 5	Unused	5			Sensor Offline	None

- **Network Type** - Set to **Rnet**
- **Address** - Enter the DIP switch settings that are on the additional ZS sensors (up to 5 total) or RnetID assigned to each wireless sensor in SensorBuilder
- **Lock Display** - Check to make the sensor display-only

D: **(Index)** - (1)

Network Type - Rnet

Address - 1

Zone Temp - Configure additional ZS or wireless temperature sensors used on the TV-VVTZC-E2.

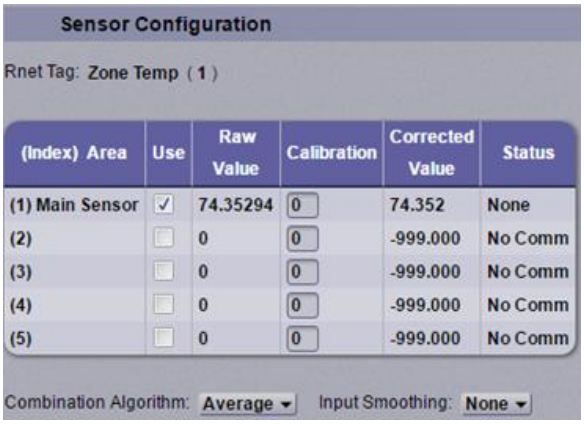

- **Use** - Check to include ZS or wireless sensors' value in the **Combined Algorithm** (**Average** is the default).
- **Raw Value** - Displays sensed temperature for each ZS or wireless temperature sensor's address
- **Calibration** - If needed, enter value to adjust the **Corrected Value** from the **Raw Value**, in order to calibrate an individual ZS or wireless sensor's sensed value.
- **Combination Algorithm** - Use **Average**, **Maximum**, or **Minimum** zone temperature to calculate the **Corrected Value** for temperature control.

D: **(Index) Area** - (1) Main Sensor

Use - checked

Calibration - 0

Combination Algorithm - Average

Input Smoothing - None

Show on Sensors - Calculated Value

Display Resolution - 1

COV Increment - .1

©2022 Carrier.
All rights reserved.

Zone Humidity - Configure additional ZS or wireless humidity sensors used on the TV-VVTZC-E2.

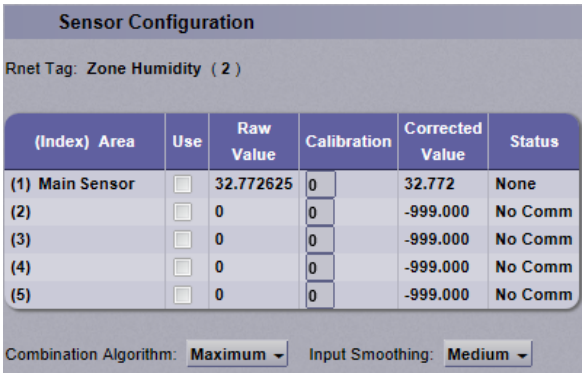

- **Use** - Check to include ZS or wireless sensors' value in the **Combined Algorithm** (**Maximum** is the default).
- **Raw Value** - Displays sensed humidity for each ZS or wireless humidity sensor's address
- **Calibration** - If needed, enter value to adjust the **Corrected Value** from the **Raw Value**, in order to calibrate an individual ZS or wireless sensor's sensed value.
- **Combination Algorithm** - Use **Average**, **Maximum**, or **Minimum** ZS or wireless humidity to calculate the **Corrected Value** for humidity control.

D: **(Index) Area** - (1) Main Sensor

Use - unchecked

Calibration - 0

Combination Algorithm - Maximum

Input Smoothing - None

Show on Sensors - Calculated Value

Display Resolution - 1

COV Increment - 1

ZS Zone CO2 - Configure additional ZS CO_2 sensors used on the TV-VVTZC-E2.

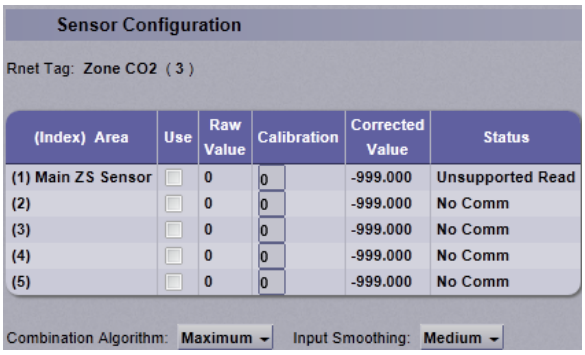

- **Use** - Check to include ZS sensors' value in the **Combined Algorithm** (**Maximum** is the default).
- **Raw Value** -Displays sensed CO_2 for each ZS CO_2 sensor's address
- **Calibration** - If needed, enter value to adjust the **Corrected Value** from the **Raw Value**, in order to calibrate an individual ZS sensor's sensed value.
- **Combination Algorithm** - Use **Average**, **Maximum**, or **Minimum** ZS CO^2 to calculate the **Corrected Value** for CO_2 control.

D: **(Index) Area** - (1) Main ZS Sensor

Use - unchecked

Calibration - 0

Combination Algorithm - Maximum

Input Smoothing - Medium

Show on Sensors - Calculated Value

Display Resolution - 1

COV Increment - 10

©2022 Carrier.
All rights reserved.

WS Battery Strength % — Displays charge strength indicated on the wireless space temperature sensor. If there are multiple wireless sensors, it displays the lowest value.	R: _%
WS Signal Strength % — Displays radio signal strength of the wireless space temperature sensor. If there are multiple wireless sensors, it displays the lowest value.	R: _%
Rnet Sensed Occupancy – Displays occupancy status detected by wireless infrared motion sensor.	R: Off/On
ZS model to show on graphic – Select the ZS model, from the drop-down list, that you want to display on the graphic.	D: ZS Pro model R: None ZS Pro model ZS Base model ZS Plus model
WS model to show on graphic – Select the wireless model, from the drop-down list, that you want to display on the graphic.	D: WS Plus model R: WS Base model WS Plus model WS Pro model
Net Space Temp to show on graphic — Select the type of sensor to display on graphic.	D: Equipment Touch R: Network Temp Equipment Touch
System Space Temperature – The current value of the controlling space temperature received over the network from another source. -999 indicates no value has been received and it will not be used.	R: -50 to 150°F (-45.5 to 65.5°C)
System Setpoint Adjustment – The space temperature setpoint adjustment value received over the network.	R: -5 to 5Δ°F (-2.7 to 2.7Δ°C)
System Space RH – The relative humidity received over the network. -999 indicates no value has been received and it will not be used.	R: 2 to 100%
System Space AQ – The indoor air quality received over the network. -999 indicates no value has been received and it will not be used.	R: 300 to 9999 ppm
System Cool Demand Level– The value received over the network and used by the demand limiting function to expand the cooling setpoint.	R: 0 to 3
System Heat Demand Level– The value received over the network and used by the demand limiting function to expand the heating setpoint.	R: 0 to 3
System Outdoor Air Temperature – The OAT received over the network.	R: -50 to 150°F (-45.5 to 65.5°C)
System Occupancy – The status of the **System Occupancy** network point.	D: Unoccupied R: Unoccupied/Occupied

©2022 Carrier.
All rights reserved.

Maintenance

Navigation: i-Vu® / Field Assistant: **Properties** > **Control Program** > **Maintenance**

Point Name/Description	Default/Range
Unit	
Occupancy Status – The controller's occupancy status as determined by a network schedule, a local schedule, or a timed override.	R: Unoccupied/Occupied
Temp Compensated Start or **Learning Adaptive Start** – Indicates the type of optimal start (if any) that is configured and whether the algorithm is active or inactive.	R: Inactive/Active
Space Temp Source – The source of the controlling space temperature value. Options: **Sensor Failure** – No valid space temperature or sensor status = failed. **SPT Sensor** – An SPT sensor is connected to the controller's Rnet port. **T55/56** – A T55, T56, or T59 sensor is connected to the controller's I/O terminals. **Network** – A network temperature sensor is bound to the controller's space temperature AV. **Airside Linkage** – The space temperature from a linked terminal. **Locked Value** – The controller's space temperature input has been manually locked at a value. **ZS Sensor** – A ZS sensor is connected to the controller's Rnet port.	R: Sensor Failure SPT Sensor T55/T56 Network Airside Linkage Locked Value ZS Sensor
Setpoint Adjustment – The amount that a user has adjusted the setpoints on a zone sensor.	R: -20 to 20Δ°F (-11.1 to 11.1Δ°C)
Effective Heat Setpoint – The current heating setpoint. May include offsets from configured occupied/unoccupied setpoints resulting from **Optimal Start** to **Demand Limit**.	R: _°F/C
Effective Cool Setpoint – The current cooling setpoint. May include offsets from configured occupied/unoccupied setpoints resulting from **Optimal Start** to **Demand Limit**.	R: _°F/C
Relative Humidity Source – The source of the relative humidity value.	R: N/A Local Network Linkage Locked Value ZS Sensor
IAQ Source – The source of the indoor air quality value.	R: N/A Local Network Linkage Locked Value ZS Sensor
Outdoor Air Temperature Source – The source of the outdoor air temperature.	R: N/A Local Network Linkage Locked Value
Cooling Demand Level – The system cool demand level received over the network.	R: 0 to 3

©2022 Carrier.
All rights reserved.

Point Name/Description	Default/Range
Heating Demand Level – The system heat demand level received over the network.	R: 0 to 3
Heat Delay – The status of the terminal heat delay.	R: Inactive/Active
Remaining Heat Delay – If **Heat Delay** is **Active**, this is the remaining delay time.	R: 0 to 60 minutes
Calculated DCV Damper Position – If the controller is in IAQ Override mode, this is the calculated minimum damper position that will be maintained to satisfy the mode.	R: 0 to 100%
Calculated Dehumidify Dmpr Position – If the controller is in Dehumidify mode, this is the calculated minimum damper position that will be maintained to satisfy the mode.	R: 0 to 100%
Reset Filter Alarm – Set this to **On** to reset an active **Filter Alarm** and restart the **Filter Service Alarm Timer**. After the alarm returns to normal, this automatically changes to **Off**.	D: Off R: On/Off
Occupancy Contact State - The physical state of the controller's **IN-04** input.	R: Open/Closed
Cooling BTU's – Current Cooling Energy being delivered to the space.	R: 0 to 99999 BTU (0 to 99999 KJoules)
Heating BTU's – Current Heating Energy being delivered to the space.	R: 0 to 99999 BTU (0 to 99999 KJoules)
Occupancy	
BAS On/Off – Determines the occupancy state of the controller and can be set over the network by another device or third party BAS. Options: **Inactive** – Occupancy is determined by a configured schedule. **Occupied** – The controller is always in the occupied mode. **Unoccupied** – The controller is always in the unoccupied mode. **NOTE** If **BAS On/Off** is set to either **Unoccupied** or **Occupied**, the **Optimal Start** routine is automatically disabled.	D: Inactive R: Inactive Occupied Unoccupied
Schedules – The controller's occupancy status based on the local schedule.	R: Occupied/Unoccupied
Pushbutton Override – **Active** indicates if a user pushed the sensor's override button to override the occupancy state.	R: Off/Active
Override Time Remaining – The amount of time remaining in an override period.	R: 0 to 480 minutes
Occupancy Contact Status – The physical state of the controller's **IN-04** input.	R: Inactive Active Unoccupied/Stdby
Global Occupancy – The **System Occupancy** network input's current state.	D: Unoccupied R: Unoccupied/Occupied

©2022 Carrier.
All rights reserved.

Local BACnet Schedule	R: Off/On
Configure ZS Sensors by setting the following options in the **Local BACnet Schedule** microblock popup. Click **Local BACnet Schedule** to access the microblock popup **Properties** page > **Details** tab. See the microblock Help for more detailed explanations.	
Sensor Configuration	
Allow Force Unoccupied: – Check to allow a user to save energy by forcing the zone into an unoccupied schedule on the ZS sensor. The user does this by holding the sensor's On/Off button for at least 3 seconds. This forced state remains in effect until the schedule transitions to unoccupied or until a user presses the sensor's On/Off button again.	D: Enabled R: Disabled/Enabled
Force Unoccupied without Delay: – Check to allow a user to force a zone to unoccupied immediately instead of the normal 3-second delay. **NOTE** This option is not available if **Allow TLO Set During Occupied** is checked.	D: Enabled R: Disabled/Enabled
Timed Local Override	
Increment: – Minutes that the microblock adds to the zone's occupied time for each click of the zone's local override button or switch.	D: 30:00 mm:ss
Maximum Duration: – Maximum value (up to 960 minutes) the microblock outputs, regardless of additional pulses from the controller's input.	D: 60:00 mm:ss R: 0 to 960:00 mm:ss

Environmental Index	
Environmental Index (EI) – Initial **Occupied** value is 100%. A value of 0% means the zone is **Unoccupied**. If the space temperature deviates from **Effective Heat Setpoint** and **Effective Cool Setpoint** range, the value is derated. EI supports an optional RH and/or CO_2 sensor. The RH and/or CO_2 values could also derate an EI.	R: 0 to 100%
EI Time Satisfied – Percentage of **Occupied** time during which a zone maintains an EI of 70% or higher.	R: 0 to 100%
Weighted EI – Determines the priority of a zone in an EI roll-up, which must be completed using a different control program.	R: 0 to 100000.0
EI Total Weight – Current **EI Weighting Factor** used to scale the **Weighted EI**.	R: 0 to 1000.0
EI Decreased By – Source(s) of an EI value reduction. Options: **Temp** – EI decreased by Space Temperature **Temp & RH** – EI decreased by Space Temperature and Relative Humidity **Temp, RH, & CO2** – EI decreased by Space Temperature, Relative Humidity, and CO2 **RH** – EI decreased by Relative Humidity **RH & CO2** – EI decreased by Relative Humidity and CO2 **CO2** – EI decreased by CO2 **Temp & CO2** – EI decreased by Space Temperature and CO2 **None** – No source(s) decreasing Environmental Index value	R: Temp Temp & RH Temp, RH, & CO2 RH RH & CO2 CO2 Temp & CO2 None

©2022 Carrier.
All rights reserved.

EI Space Temp Setpoint Tolerance – Expands the ideal heating and cooling setpoint range for EI temperature sensitivity.	D: 0.5Δ°F (.27Δ°C) R: 0 to 5Δ°F (0 to 2.7Δ°C)
EI Humidity Low Limit – Setpoint value that relative humidity must drop below in order to decrease an EI Value.	D: 30% R: 0 to 100%
EI Weighting Factor – Creates a weighted average of a zone EI value by indicating the priority of that zone in an EI roll-up. A value of 0 disables the zone from an EI roll-up.	D: 1 R: 0 to 1000.0

Alarms

Navigation: i-Vu® / Field Assistant: **Properties** > **Control Program** > **Alarms**

Point Name/Description	Range
Space Temperature Alarm – Indicates if the space temperature exceeds the high or low alarm limit.	R: Normal/Alarm
Alarming Temperature – Indicates the space temperature value that caused the space temperature alarm. This value is only displayed when the **Space Temperature** alarm (above) is in **Alarm**.	R: -56 to 245°F (-48.9 to 118.3°C)
Alarm Limit Exceeded – Indicates the value of the space temperature alarm limit that caused the space temperature alarm condition. Value is only displayed when the **Space Temperature** alarm (above) is in **Alarm**.	R: -56 to 245°F (-48.9 to 118.3°C)
Space Temp Sensor – Indicates if the space temperature sensor fails.	R: Normal/Alarm
Wireless Battery Strength Alarm – Indicates one of the configured wireless space temperature sensors is displaying low charge strength.	R: Normal/Alarm
Wireless Signal Strength Alarm – Indicates one of the configured wireless space temperature sensors is displaying low radio signal strength.	R: Normal/Alarm
ZS/WS Sensor Configuration– Indicates if the ZS or wireless space temperature sensor is not configured correctly.	R: Normal/Alarm
Indoor Air Quality – Indicates if the occupied CO_2 level exceeds the **Occupied High CO2 Alarm Limit**.	R: Normal/Alarm
Supply Air Temperature – Indicates if the supply air temperature exceeds the high temperature alarm limit or drops below the low temperature alarm limit.	R: Normal/Alarm
Filter – Indicates if the filter's runtime hours exceeds the runtime alarm limit.	R: Clean/Dirty
Space Relative Humidity – Indicates if the relative humidity exceeds the high RH alarm limit.	R: Normal/Alarm
Network OAT - Indicates if the controller is not receiving a valid OAT value over the network.	R: Normal/Alarm

©2022 Carrier.
All rights reserved.

Point Name/Description	Range
Airside Linkage Status – If the controller is the VVT Master, **Alarm** indicates that it lost Linkage communications with the air source. If the controller is a slave, **Alarm** indicates that it lost Linkage communications with the VVT master.	R: Normal/Alarm
Smart Valve Alarm – Indicates if the Smart Valve fails.	R: Normal/Alarm
Heat Valve Cycling – Indicates if the heating valve exceeds the limit of cycles per period.	R: Normal/Alarm
Heat Valve Fail – Indicates if the heating valve fails.	R: Normal/Alarm

Linkage

Navigation: i-Vu® / Field Assistant: **Properties** > **Equipment** > **Linkage**

Point Name/Description	Default/Range
Airside Linkage	
Click **Linkage Collector/Linkage Provider** to access the microblock popup's **Summary** and **Details** tabs. See the microblock popup's Help for more detailed explanations.	
Linkage Collector – Set the **Number of Providers** to the total number of controllers in the linked system, including the bypass and VVT Master.	D: 1 R: 1 to 32
Linkage Provider – Enter the MS/TP **Network Number** and MAC **Address** of the linked air source controller. **Network Number** **Address** **NOTE** If you change the **Network Number** or **Address**, you must use the i-Vu® application or Field Assistant to cycle power to the controller for the changes to take effect.	 D: 0 R: 0 to 65535 D: 0 R: 0 to 99
Airside Linkage Status – If **Active**, the controller is part of a linked system. If **Not Active**, the controller is a stand-alone device.	R: Not Active/Active
Linkage Zone Type – Select whether the controller is a Master or a slave. Select **VAV Master** if the controller is the Master or a sub-master in a VAV application. Select **VVT Master** only if the controller is the Master in a VVT application. VVT applications do not support sub-masters.	D: Slave R: Slave VVT Master VAV Master

©2022 Carrier.
All rights reserved.

Point Name/Description	Default/Range
Inhibit Heating Call from this zone? - If **Yes**, the VVT Master ignores this controller as a heating caller.	D: No R: No/Yes
Active Heating Caller? – Displays if this zone is currently an active heat caller for the system.	D: Yes R: No/Yes
Inhibit Cooling Call from this zone? - If **Yes**, the VVT Master ignores this controller as a cooling caller.	D: No R: No/Yes
Active Cooling Caller? – Displays if this zone is currently an active cooling caller for the system.	D: Yes R: No/Yes
Linkage Callers – The minimum number of zones required to make the air source go into heating or cooling mode. 1 is typical for systems with 8 zones or less. For larger systems, increase the number by 1 for each 6 zones. For example, 3 linkage callers for a 20 zone system.	D: 1 R: 1 to 32
System Mode Reselect Timer (minutes) – Applies only to a VVT master. Defines how long the system continues to operate in the current mode before it reassesses all zones while the current demand is still active.	D: 30 R: 10 to 120
Linkage RH Type – Determines if the VVT or VAV Master sends to the air source the average or maximum values of all linked zone controllers that have a relative humidity (RH) sensor.	D: Avg R: Avg/Max
Linkage IAQ Type – Determines if the Master controller sends to the air source the average or maximum values of all linked zone controllers that have a CO_2 sensor for DCV and IAQ control.	D: Max R: Avg/Max
Air Source Mode – If **Airside Linkage Status** is **Active**, this is the current mode of the linked air source. If **Airside Linkage Status** is **Not Active**, this is the mode of the air source as determined by the zone controller's SAT sensor.	R: Off Warmup Heat Cool Freecool Pressure Evac Vent
Air Source Supply Air Temp – Displays the air source's SAT when **Airside Linkage Status** is **Active**.	R: -56 to 245°F (-48.9 to 118.3°C)
Air Source Static Pressure – Displays the air source's supply static pressure when **Airside Linkage Status** is **Active**.	R: 0 to 5.0 in wc (0 to 1.245 kPa)
Air Source Outdoor Air Temp – Displays the air source's OAT when **Airside Linkage Status** is **Active**.	R: -56 to 245°F (-48.9 to 118.3°C)

©2022 Carrier.
All rights reserved.

I/O Points

Navigation: i-Vu® / Field Assistant: **Properties** > **I/O Points**

WARNINGS

- Do not change the **Value**, **Offset/Polarity**, **Exp:Num**, **I/O Type**, **Sensor/Actuator Type**, **Min/Max**, or **Resolution** I/O configuration parameter for the points listed below. Changing these parameters could cause improper control and/or equipment damage.
- Use extreme caution if locking a point as this may also cause improper control and/or equipment damage.

Point Name/Description	Default/Range
SPT Sensor/Zone Temp **SPT Sensor** - (For the SPT Standard, SPT Plus, and SPT Pro sensors only). Sensor configurations on the microblock's **Properties** > **Details** tab are listed below. For more information, see the *Carrier Sensors Installation Guide*.	R: -56 to 245°F (-48.9 to 118.3°C)
Do not adjust the following settings: **Min Present Value** - Minimum present value the sensor transmits before indicating an alarm.	D: 45°F (7.2°C)
Max Present Value - Maximum present value the sensor transmits before indicating an alarm.	D: 96°F (35.5°C)
Setpoint Adjustment: **Max Adjust** – The amount that a user may adjust the setpoint at the sensors.	D: 5Δ°F (2.7Δ°C) R: 0 to 15Δ°F (0 to 8.3Δ°C)
Reset setpoint adjust to zero when unoccupied - Resets the setpoint bias to zero when the controller transitions to unoccupied.	D: Off
Timed Local Override: **Allow Continuous** (SPT Pro only) – If checked, a user can press the sensor's local override button until the **Max Accum** value is reached, then press one more time to have a continuous override until the next occupied period or until the user cancels the override. The display shows **On** during a continuous override.	D: Off R: Off/On
Each Pulse – The amount of time added to the total override time when a user pushes the sensor's override button.	D: 30:00 mm:ss R: 0:00 to 1440:00 mm:ss
Max Accum – The maximum amount of override time accumulated when a user pushes the sensor's override button.	D: 240:00 mm:ss R: 0:00 to 2000:00 mm:ss
Cancel override – How long a user must push the sensor's override button to cancel an override.	D: 3 seconds R: 0 to 60 seconds
Sensor Array: **Sensor calculation method -** When using multiple SPT sensors, select the process variable to be passed to the controller.	D: Avg R: Avg, Min, Max

©2022 Carrier.
All rights reserved.

Point Name/Description	Default/Range
BACnet configuration: **Network Visible -** Must be enabled for other BACnet objects to read or write to this point, and for this point to generate alarms.	D: Enabled
Object Name - Do not change.	D: zone_temp

CO2 Sensor – The current voltage of the controller's **IN-01** input.	R: 0 to 5 Vdc
RH Sensor – The current voltage of the controller's **IN-01** input.	R: 0 to 5 Vdc
T55 Zone Temp – The current value of the controller's **IN-02** space temperature sensor input.	R: -56 to 245°F (-48.9 to 118.3°C)
SAT Sensor – The current value of the controller's **IN-03** supply air temperature sensor input.	R: -56 to 140°F (-48.9 to 60°C)
Smart Valve Pos – The value provided by the controller's Smart Valve.	R: _%
LUX – The value provided by the controller's ZS sensor to indicate lighting level.	R: 0 to 1020 lx
WS Battery Strength % — Displays charge strength indicated on the wireless space temperature sensor. If there are multiple wireless sensors, it displays the lowest value.	R: _%
WS Signal Strength % — Displays radio signal strength of the wireless space temperature sensor. If there are multiple wireless sensors, it displays the lowest value.	R: _%
Zone Humidity – The value provided by the controller's ZS or wireless sensor (if present). See details below.	R: _%
Zone Temp – The value provided by the controller's ZS or wireless sensor (if present).	R: _F°
ZS Zone CO2 - IAQ/CO2 signal received from CO2-enabled ZS Sensor(s).	R: _ppm

ZS/WS Sensors	
The following properties apply to the ZS or wireless Standard, ZS or wireless Plus, and ZS or wireless Pro only. Sensor configurations on the microblock's **Properties** > **Details** tab are listed below for: • **Zone Humidity** • **Zone Temp** • **ZS Zone CO2**	
Default Value – The value that outputs when communication of all enabled sensors fails or during sensor startup. The default value is used for each sensor's corrected value in the i-Vu® system when the **Valid?** output is False (**Off**).	D: -999 R: -999 to 999
Sensor Configuration table • **(Index) Area** – The Index number corresponds to the sensors defined in **Configuration** > **Service Configuration** > **Sensor Binder**. (Ctrl+click the property name. See *Service Configuration* (page 114).)	D: (1) Main ZS/WS Sensor R: (1) to (5)
• **Use** – Check **Enable** for each sensor that you want to include in the combination algorithm used to determine the output value.	D: Enabled index (1) R: checked or unchecked

©2022 Carrier.
All rights reserved.

• **Calibration** – If needed, enter a **Calculated Value** by adding the **Calibration** to the **Raw Value** for each ZS or wireless sensor.	D: 0 to 10
Combination Algorithm – If using more than one ZS or wireless sensor, select how the enabled sensors' values are to be combined to determine the output value. When the calculation is performed, only sensors with a valid value will be included.	D: Average R: Average Maximum Minimum
Input Smoothing – If the raw value from the sensor changes frequently, you can select one of the following options to send out an average of several readings on the output wire. • **None** - The raw value • **Minimum** - The average of the last 2 readings • **Medium** - The average of the last 5 readings • **Maximum** - The average of the last 9 readings	D: Medium R: None Minimum Medium Maximum
Show on sensors – Select **Local Value** to have each enabled sensor display its individual sensed value, or **Calculated Value** to have each sensor display the value determined by the **Combination Algorithm**.	D: Calculated Value R: Calculated Value Local Value
Display Resolution – Defines the resolution of the value to be displayed on the sensor. For example, 1 displays only integers (e.g., 74) and 0.5 displays values to the nearest 0.5 (e.g., 74.5).	D: 1 R: 1000 100 10 1 0.5 0.1 0.01 0.001
COV Increment – To reduce Rnet traffic, you can force the microblock to update its output only when the sensed value changes by more than the COV Increment.	D: .1 R: 0 to 100

Occupancy Contact State - Current hardware state of the controller's **IN-04** input.	R: Open/Closed
Sensor Invalid – This internal input monitors the communication between the controller and the SPT sensor. **Off** indicates communication is normal.	R: Off/On
Rnet Sensed Occupancy – Displays occupancy status detected by wireless infrared motion sensor.	R: Off/On
Hot Water Valve - The current value of the controller's **AO-01** output.	R: 0 to 100%
Smart Valve Cmd – The current value of the controller's output to the Smart Valve.	R: 0 to 100%
Heating Stage 1 - The current hardware state of the controller's **BO-01** output.	R: Off/On
Heating Stage 2 - The current hardware state of the controller's **BO-02** output.	R: Off/On
Fan S/S or EH 3 - The current hardware state of the controller's **BO-03** output. The function of this output depends on the terminal type.	R: Off/On

©2022 Carrier.
All rights reserved.

Appendix B: VVT terminal modes

Air Source Mode	Temperature Control Requirements	Terminal Type	Aux Heat	Terminal Mode	Damper Control (Damper Setpoint used)	Heat Control	Fan Control
Off	None	All	N/A	Off	Hold Damper @65% (None)	Disable	Disable
	Cooling	All	N/A	Off	Hold Damper @65% (None)	Disable	Disable
	Heating	Single Duct	N/A	Off	Hold Damper @65% (None)	Disable	N/A
		Series or Parallel Fan	No	Off	Hold Damper @65% (None)	Disable	Disable
		Series Fan	Yes	Heating	Hold Damper @65% (None)	Enable	Enable
		Parallel Fan	Yes	Heating	Close Damper (None)	Enable	Enable
Vent	None	Single Duct	N/A	Vent	Vent Damper Position (Vent)	Disable	N/A
		Series Fan	N/A	Vent	Vent Damper Position (Vent)	Disable	Enable
		Parallel Fan	N/A	Vent	Vent Damper Position (Vent)	Disable	Disable
	Cooling	Single Duct	N/A	Cooling	Modulate Damper Position (Cool)	Disable	N/A
		Series Fan	N/A	Cooling	Modulate Damper Position (Cool)	Disable	Enable
		Parallel Fan	N/A	Cooling	Modulate Damper Position (Cool)	Disable	Disable
	Heating	Single Duct, Parallel Fan	No	Cooling	Minimum Damper Position (Cool)	Disable	Disable
		Series Fan	No	Heating	Minimum Damper Position (Cool)	Disable	Enable
		Single Duct	Yes	Reheat	Minimum Damper Position	Enable	N/A
		Series or Parallel Fan	Yes	Heating	Minimum Damper Position (Cool)	Enable	Enable
Cool or Freecool	None	Single Duct	N/A	Vent	Minimum Damper Position (Cool)	Disable	N/A
		Series Fan	N/A	Vent	Minimum Damper Position (Cool)	Disable	Enable
		Parallel Fan	N/A	Vent	Minimum Damper Position (Cool)	Disable	Disable
	Cooling	Single Duct	N/A	Cooling	Modulate Damper Position (Cool)	Disable	N/A
		Series Fan	N/A	Cooling	Modulate Damper Position (Cool)	Enable	Enable
		Parallel Fan	N/A	Cooling	Modulate Damper Position (Cool)	Disable	Disable
	Heating	Single Duct, Parallel Fan	No	Heating	Minimum Damper Position (Cool)	Disable	Disable
		Series Fan	No	Heating	Minimum Damper Position (Cool)	Disable	Enable
		Single Duct	Yes	Reheat	Minimum Damper Position	Enable	N/A
		Series or Parallel Fan	Yes	Heating	Minimum Damper Position (Cool)	Enable	Enable

©2022 Carrier.
All rights reserved.

Air Source Mode	Temperature Control Requirements	Terminal Type	Aux Heat	Terminal Mode	Damper Control (Damper Setpoint used)	Heat Control	Fan Control
Heat, Warmup	None	Single Duct, Parallel Fan	N/A	Heating	Minimum Damper Position (Heat)	Disable	Disable
		Series Fan	N/A	Heating	Minimum Damper Position (Heat)	Disable	Enable
	Cooling	Single Duct, Parallel Fan	N/A	Heating	Minimum Damper Position (Heat)	Disable	Disable
		Series Fan	N/A	Heating	Minimum Damper Position (Heat)	Disable	Enable
	Heating	Single Duct	No	Heating	Modulate Damper Position (Heat)	Disable	N/A
		Single Duct	Yes	Heating	Modulate Damper Position (Heat)	Enable	N/A
		Series or Parallel Fan	No	Heating	Modulate Damper Position (Heat)	Disable	Enable
		Series or Parallel Fan	Yes	Heating	Modulate Damper Position (Heat)	Enable	Enable
Pressurization (Linked air source only)	None	Single Duct, Parallel Fan	N/A	Pressurize	Maximum Damper Position (Cool)	Disable	Disable
		Series Fan	N/A	Pressurize	Maximum Damper Position (Cool)	Disable	Enable
	Cooling	Single Duct, Parallel Fan	N/A	Pressurize	Maximum Damper Position (Cool)	Disable	Disable
		Series Fan	N/A	Pressurize	Maximum Damper Position (Cool)	Disable	Enable
	Heating	Single Duct, Parallel Fan	No	Pressurize	Maximum Damper Position (Cool)	Disable	Disable
		Series Fan	No	Pressurize	Maximum Damper Position (Cool)	Disable	Enable
		Single Duct, Parallel Fan	Yes	Pressurize	Maximum Damper Position (Cool)	Disable	Disable
		Series Fan	Yes	Pressurize	Maximum Damper Position (Cool)	Disable	Enable
Evacuation/ Shutdown (Linked)	All	All	N/A	Evacuate	Close Damper	Disable	Disable

©2022 Carrier.
All rights reserved.

Appendix C: ZS Sensor display for TV-VVTZC-E2

Property	ZS Screen	Rnet Tag	Rnet Text [1]	Description
Active Alarms	Diagnostic	1550	**-nonE** **StP-AL** **SPco2-AL** **SP_rH-AL** **Sat-AL**	No Active Alarms Zone Temp Alarm Zone CO2 Alarm Zone Humidity Alarm Supply Air Temp Alarm
Active Maintenance	Diagnostic	1551	**-nonE-** **SnSr-FLt** **Fltr-dtY** **LInc-FLt**	No Active Maintenance Sensor Fault Dirty Filter Linkage Fault
Active Air Source Linkage Mode	Diagnostic	1552	**OFF** **hEAt-uP** **hEAt** **cooL** **FrEEcool** **PrESSrZE** **EuAcuATE** **vEnt** **no-LInc**	Off Warm-up Heat Cool Freecool Pressurize Evacuate Vent Linkage Not Active
Supply Air Temp	Info	304		Air Source Supply Air Temp, if available
Air Flow Percentage of Nominal	Info	308		% of design air flow
Outdoor Air Temperature	Info	 F°		Outside Air Temp

[1] Rnet text is the scrolling text that appears on the ZS Pro Sensor's display.

NOTES

- To view properties on the **Diagnostic** Screen, hold the *i* button for 3 seconds. Tap the button to cycle through information to help troubleshoot your system.
- The Rnet tag is displayed on the ZS sensor display.
- To view properties on the Info Screen, press the *i* button. Tap the button to cycle through information.

©2022 Carrier.
All rights reserved.

Appendix D: BACnet points list

				BACnet	
Point Name	Point Access	Units	Default Value	BACnet Point Name	BACnet Object ID
Cool Min Damper Position	R	%		cl_min_dmp_pos	
Cool Max Damper Position	R	%		cl_max_dmp_pos	
Single Duct Reheat Damper Position	R	%		re_ht_min_dmp_pos	
Heat Min Damper Position	R	%		ht_min_dmp_pos	
Heat Max Damper Position	R	%		ht_max_dmp_pos	
Ventilation Position	R	%		vent_dmp_pos	
Occupied Cooling Setpoint	R/W	°F	75	occ_cl_stpt	AV:3001
Occupied Heating Setpoint	R/W	°F	70	occ_ht_stpt	AV:3002
Unoccupied Cooling Setpoint	R/W	°F	90	unocc_cl_stpt	AV:3003
Unoccupied Heating Setpoint	R/W	°F	60	unocc_ht_stpt	AV:3004
Occupancy Contact State	R	0=Open 1=Closed		occ_switch	BI:1001
Air Source Outdoor Air Temp	R	°F		link_ahu_oat	AV:2609
Air Source Static Pressure	R	in H2O		link_ahu_static	AV:2610
Air Source Supply Air Temp	R	°F		link_sat	AV:2608
Baseboard Heating Capacity	R	%		bas_bd_ht_cap	AV:2031
Cooling Demand Level	R			cool_demand_level	AV:9006
Damper Position	R	%		dpr_pos	AV:1013
Effective Cool Setpoint	R	°F		eff_cl_stpt	AV:3005
Effective Heat Setpoint	R	°F		eff_ht_stpt	AV:3006
Fan Off Delay	R/W	sec	120	fan_delay_off	AV:9024
Filter Runtime	R	hr		filter_rntm	AV:2015
Filter Service Alarm Timer	R/W	hr	0	filter_service_hrs	AV:2019
Heating Capacity	R	%		htg_cap	AV:2030
Heating Demand Level	R			heat_demand_level	AV:9036
Heating Lockout Temperature	R/W	°F	70	oat_ht_lockout	AV:9003
Indoor Air Quality CO2 (ppm)	R	ppm		iaq	AV:1009
lux sensor BACnet accessible	R			lux_bn	
Min Setpoint Separation	R/W	°^F	4	min_stpt_sep	
Occ Override Delay	R/W	min	15	occ_ovr_delay	AV:9028
Occupied Alarm Hysteresis	R/W	°^F	5	occ_spt_alrm_hyst	
Occupied RH Control Setpoint	R/W	%rh	65	occ_dehum_stpt	AV:3011
Outdoor Air Temperature	R	°F		oa_temp	AV:1003
Override Time Remaining	R	min		ovrde_time	AV:2016
Power Fail Restart Delay	R/W	sec	60	start_delay	AV:9007
Setpoint Adjustment	R	°F		stpt_adj	AV:1006
Setpoint Adjustment Range	R/W	°^F	2	stpt_adj_range	AV:9015
Space Relative Humidity	R	%rh		space_rh	AV:1011
Space Temperature - Prime Variable	R	°F		space_temp	AV:2007
Standby Offset	R/W	°F	0	stdby_offset	AV:1017
Supply Air Temperature	R	°F		sa_temp	AV:1008
System Outdoor Air Temperature	R/W	°F	-999	system_oat	AV:1901
System Setpoint Adjustment	R/W	°F	-999	system_stpt_adj	AV:1913
System Space AQ	R/W	ppm	-999	system_iaq	AV:1903
System Space RH	R/W	%	-999	system_rh	AV:1904

©2022 Carrier.
All rights reserved.

				BACnet	
Point Name	Point Access	Units	Default Value	BACnet Point Name	BACnet Object ID
Cool Min Damper Position	R	%		cl_min_dmp_pos	
System Space Temperature	R/W	°F	-999	system_spt	AV:1902
Airside Linkage Status	R	0=Not Active 1=Active		a_link_status	BV:2601
DCV Control	R/W	0=Disable 1=Enable	Inactive (0)	dcv_enable	
Fan	R	0=Off 1=On		sfan_status	BV:1003
Heat Enable	R/W	0=Disable 1=Enable	Active (1)	ht_enable	BV:1012
Occupancy Status	R	0=Unoccupied 1=Occupied		occ_status	BV:2008
Reset Filter Alarm	R/W	0=Off 1=On	Inactive (0)	filter_rntm_clr	BV:7517
RH Control	R/W	0=Disable 1=Enable	Inactive (0)	rh_enable	
Setpoint Adjustment	R/W	0=Disable 1=Enable	Active (1)	stpt_adj_enable	BV:1013
Shutdown	R/W	0=Inactive 1=Active	Inactive (0)	shutdown	BV:9001
Air Source Mode	R	1=Off 2=Warmup 3=Heat 4=Cool 5=Freecool 6=Pressure 7=Evac 8=Vent		link_ahu_mode	MSV:2005
BAS On / Off	R/W	1=Inactive 2=Occupied 3=Unoccupied	1	keypad_ovrde	MSV:1001
Optimal Start Type	R/W	1=None 2=Temp Compensated 3=Learning Adaptive	2	start_type	MSV:2009
Space Temp Source	R	1=Sensor Failure 2=SPT Sensor 3=T55 / T56 4=Network 5=Airside Linkage 6=Locked Value 7=ZS Sensor 8=Wireless Sensor		spt_status	MSV:2003
Terminal Mode	R	1=Off 2=Heating 3=Warm-Up 4=Vent 5=N/A 6=Cooling 7=Dehumidify 8=Reheat 9=Pressurize 10=Evacuate 11=Shutdown 12=IAQ Override 13=Air Balancing		terminal_status	MSV:2006
Terminal Type	R	1=Single Duct 2=Parallel Fan 3=Series Fan		terminal_type	MSV:2007

©2022 Carrier.
All rights reserved.

				BACnet	
Point Name	Point Access	Units	Default Value	BACnet Point Name	BACnet Object ID
Cool Min Damper Position	R	%		cl_min_dmp_pos	
Zone Type	R	1=Slave 2=VVT Master 3=VAV Master		zone_type	MSV:2008
Airside Linkage Status	R	0=Normal 1=Alarm		air_linkage_fail	BV:7030
Filter	R	0=Clean 1=Dirty		filter_alarm	BV:7017
High SPT	R	0=Normal 1=Alarm		spt_hi_alarm	BV:7011
Indoor Air Quality	R	0=Normal 1=Alarm		iaq_alarm	BV:7005
Low SPT	R	0=Normal 1=Alarm		spt_lo_alarm	BV:7012
Network OAT	R	0=Normal 1=Alarm		oat_fail	BV:7029
Space Relative Humidity	R	0=Normal 1=Alarm		sprh_hi_alarm	BV:7018
Space Temp Sensor	R	0=Normal 1=Alarm		spt_fail	BV:7001
Supply Air Temperature	R	0=Normal 1=Alarm		sat_alarm	BV:7004
Wireless Battery Strength Alarm	R	0=Normal 1=Alarm		ws_batt_alarm	BV:7064
Wireless Signal Strength Alarm	R	0=Normal 1=Alarm		ws_sig_alarm	BV:7065
ZS/WS Sensor Configuration	R	0=Normal 1=Alarm		zs_config_fail	BV:7055

©2022 Carrier.
All rights reserved.

Appendix E: Module Status field descriptions

Field	Description
ADDRESS BINDING	The controller's: • Device Instance • Network number • MAC address See *To set up the controller through the Comm/Service port*s (page 82).
Date/Time	Date and time the Modstat was run
Model Name	Identifies the Product Type
Device Instance	A unique ID assigned to the controller
Driver built	When the driver was built
Downloaded by	When and where the last download was performed
Application Software Version	The name of the first control program that is downloaded
Data Partition Version	Not applicable to this device.
# PRGs initialized # PRGs running	If applicable, the number of control programs that were downloaded vs. the number that are running. If these numbers are not the same, the controller has a problem such as lack of memory.
Driver version	The name, version, and date of the driver, as well as all the bundles and versions.
Reset Counters:	The number of times each of the following events have occurred since the last time the controller was commanded to clear the reset counters. See **NOTE** below this table.
Power failures	Interruption of incoming power
Commanded boots	Includes commands issued from the i-Vu® interface such as the zap manual command, plus commands issued during a memory download.
System errors	Error in the controller's firmware or hardware
S/W Watchdog timeouts	Watchdog is firmware that monitors the application firmware for normal operation. If the watchdog firmware detects a problem, it restarts the application firmware.
H/W Watchdog timeouts	H/W Watchdog will restart the controller if it detects a severe problem with the controller's operating system
System status	Gives the current status of the controller's operation. See *LED*s (page 92) for all possible conditions.
Network status	Gives the current status of the controller's networks. See *LED*s (page 92) for all possible conditions.
System error message history	High-severity errors since the last memory download. Shows the most recent 10 messages. See **NOTE** below this table.

©2022 Carrier.
All rights reserved.

Field	Description
Warning message history	Low-severity errors and warning messages since the last memory download. Shows the most recent 10 messages. See **NOTE** below this table.
Information message history	Information-only messages since the last memory download. Shows the most recent 10 messages. See **NOTE** below this table.
Core and Base board hardware	Gives the following information about the controller's boards: • Type and board numbers that are used internally by Carrier. • The manufacture date and serial number.
Number of BACnet Objects	The number of BACnet objects that were created in the device and the number of those objects that are network visible.
Database Partition	**Non-Volatile** partition (16 MB maximum) contains data that needs to be preserved through a power cycle and archived to flash such as parameters and trend data. **Volatile** partition (6 MB maximum) contains data that does not need to be preserved through a power cycle such as status values that are calculated during runtime.
IP Networks - BBMDs	Shows the following information for each active IP network: **BBMD Active** shows whether the BACnet Broadcast Management Device is currently active (1) or inactive (0). **BBMD Entries**—the number of entries in the BBMD table (500 maximum). **FDT Entries**—the number of entries in the Foreign Device Table (500 maximum).
Network Information	The various network addresses for the controller. The **Current** and **Assigned** addresses will be the same unless the **Enable IP configuration changeover** on the **BACnet Router Properties** page is being implemented.
Statistics and Network Activity	Shows network communication statistics to assist with troubleshooting. See *Network Diagnostics - Statistics* (page 76) for more information.

NOTE If you want to clear the Reset counters and the three message history fields, click the **Clear Counts/Logs** button on the controller's **Properties** page in the i-Vu® application or in the controller setup **Device** tab.

©2022 Carrier.
All rights reserved.

Document revision history

Important changes to this document are listed below. Minor changes such as typographical or formatting errors are not listed.

Date	Topic	Change description	Code*
7/14/22	Appendix A: I/O Points	New rows - Smart Valve Pos, LUX, Smart Valve Cmd	C-AE-BB-O
	Appendix A: Alarms	New rows - Space Relative Humidity, Network OAT, Airside Linkage Status Changed "Smart HWV 1 Alarm" to "Smart Valve Alarm"	
	Appendix A: Service Configuration	Changed "Combination Smart Valve" to "Combo Smart Valve"	
	Appendix A: Alarm Configuration	Changed "Smart Vlv1 Alarm Diff" to "Smart Valve Alarm Diff"	
	Appendix A: Unit Configuration	Changed "Act Net Vlv 1 Max Pos" to "Smart Valve Max Pos" Changed "Maximum RH Override Airflow" to "Maximum RH Override Position" Changed "DCV Max Vent Airflow" to " DCV Max Vent Samper Pos"	
	Appendix A: Status	New rows - "Hot Water Valve Cmd" Changed "Hot Wtr Vlv 1 Cmd" to "Smart Valve Cmd"	
	CE and UKCA Compliance	Updated for next gen	X-PM-AB-R-BH
	FCC Compliance		
5/3/22	CE and UKCA Compliance	Added UKCA Compliance	X-PM-AB-R-BH
	Specifications		
	Specifications	Changed Protocol Revision 15 to Protocol Revision 14	X-PM-AB-E
	Addressing the TV-VVTZC-E2 through the Comm/Service ports	Added Caution regarding USB connection	X-PM-BM-R-BM
	Inputs	Updated pulse counting note	X-TS-RB-R-RB
	Input values	Updated Pulse to Analog information	

* For internal use only

©2022 Carrier.
All rights reserved.



Carrier ©2022 · Catalog No. 11-808-876-01 · 7/14/2022