INSTALLATION AND OPERATING INSTRUCTIONS

CEILING/WALL VENTILATION FAN

READ AND SAVE THESE INSTRUCTIONS

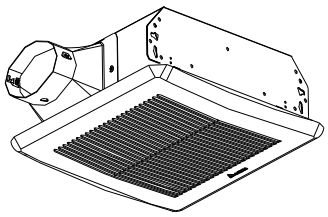

GENERAL SAFETY INFORMATION

1. Make sure that the electric service supply voltage is AC 120V, 60Hz.
2. Follow all local electrical and safety codes, as well as the Nation Electrical Code (NEC) and the Occupation Safety and Healthy Act (OSH Act).
3. Always disconnect the power source before working on or near the ventilating fan, motor or junction box.
4. Protect the power cord from sharp edges, oil, grease, hot surfaces, chemicals or other objects.
5. Do not kink the power cord.
6. Do not install the unit where ducts are configured as shown in Fig. A.
7. Provide suction parts with proper ventilation.
8. This unit is UL listed for use over a bathtub or shower when installed in a GFCI protected branch circuit.

WARNING

TO REDUCE THE RISK OF FIRE, ELECTRIC SHOCK, OR INJURY TO PERSONS, OBSERVE THE FOLLOWING:

1. Use this unit only in the manner intended by the manufacturer. If you have questions, contact the manufacturer.
2. Before servicing or cleaning unit, switch power off at service panel and lock the service disconnecting means to prevent power from being switched on accidentally. When the service disconnecting means cannot be locked, securely fasten a prominent warning device, such as a tag, to the service panel.
3. Installation work and electrical wiring must be done by qualified person(s) in accordance with all applicable codes and standards, including fire-rated construction.
4. Sufficient air is needed for proper combustion and exhausting of gases through the flue (chimney) of fuel burning equipment to prevent back drafting. Follow the heating equipment manufacturer's guideline and safety standards such as those published by the National Fire Protection Association (NFPA), and the American Society for Heating, Refrigeration and Air Conditioning Engineers (ASHRAE), and the local code authorities.
5. When cutting or drilling into wall or ceiling, do not damage electrical wiring and other hidden utilities.
6. Ducted fans must always be vented to the outdoors.
7. If this unit is to be installed over a tub or shower, it must be marked as appropriate for the application and be connected to a GFCI (Ground Fault Circuit Interrupter) - protected branch circuit.
8. Do not use this unit with any other solid-state control devices. Solid-state control devices may cause harmonic distortion, which can cause a motor humming noise.
9. NEVER place a switch where it can be reached from a tub or shower.
10. Not to be installed in a ceiling thermally insulated to a value greater than R50. (This is required for installation in Canada only).

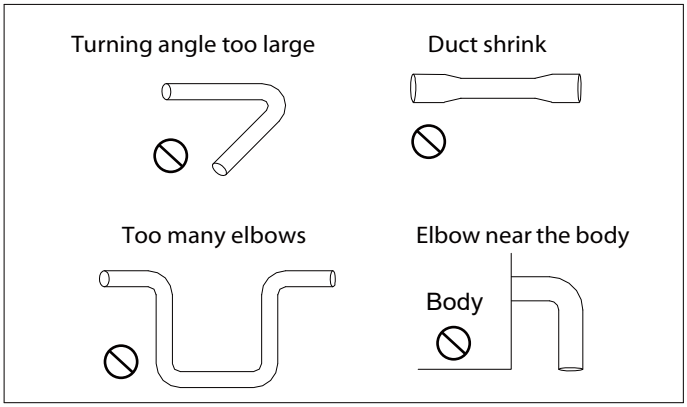

Fig. A

CAUTION

1. For General Ventilating Use Only. Do Not Use To Exhaust Hazardous Or Explosive Materials And Vapors.
2. Not for use in cooking areas. (Fig. B)
3. This product must properly connect to the grounding conductor of the supply circuit.
4. To reduce the risk of injury to persons, install the fan at least 8.2 feet (2.5m) above the floor.

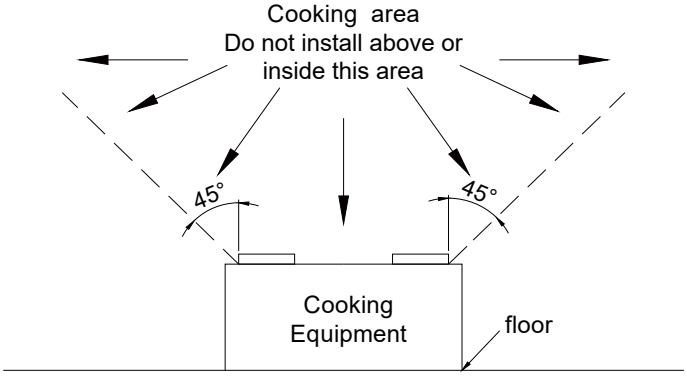

Fig. B

SUPPLIED ACCESSORIES

Part name	Appearance	Quantity
Grille	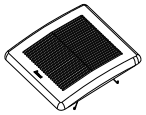	**1**
Motor	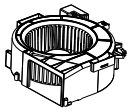	**1**
Housing	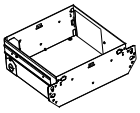	**1**
Duct Connector (4" Oval)	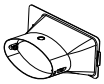	**1**
Screw (Ø4×25 mm)		**6**
Screw (#8-32x5/16")		**1**
Screw (M4x6 mm)		**1**
Suspension Bracket	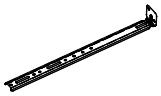	**1**

INSTALLATIONS

Proper insulation around the fan to minimize building heat loss and gain. The ducting from this fan to the outside of the building has a strong effect on the air flow, noise and energy use of the fan. Use the shortest, straightest duct routing possible for best performance, and avoid installing the fan with smaller ducts than recommended. Insulation around the ducts can reduce energy loss and inhibit mold growth. Fans installed with existing ducts may not achieve their rated air flow.

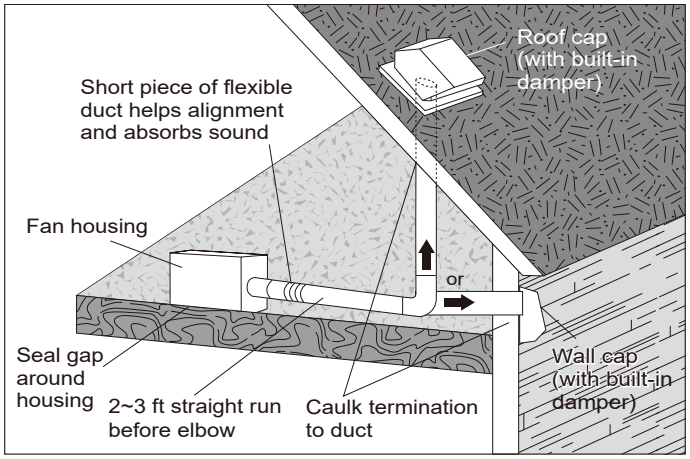

Installation I (Ceiling/Wall mount housing with flange):

1. To bend the housing tabs out to 90 degree and make housing tabs contact the bottom or front of the joist.

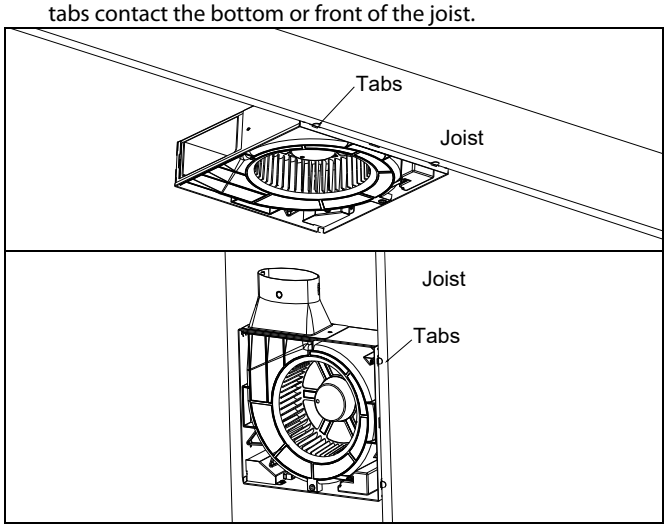

2. The housing mounts with 4 screws (Ø4×25 mm). Screw housing to joist through the round holes in each mounting flange, then through the other holes.

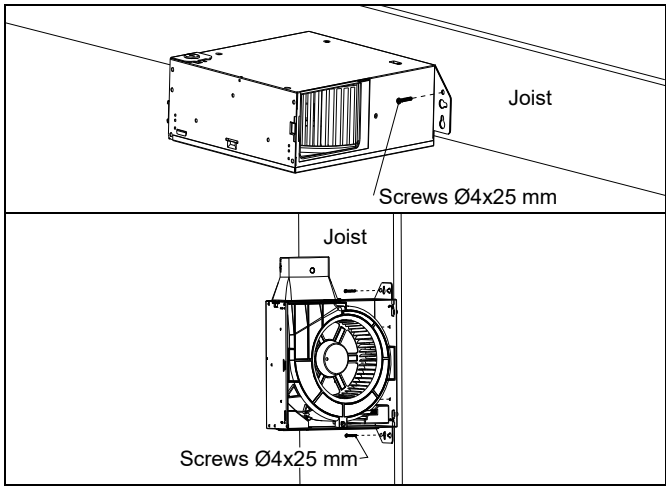

Installation II (Using suspension bracket):

1. The housing mounts with 4 screws (Ø4×25 mm). Screw housing to joist through the round holes in each mounting flange, then through the other holes.

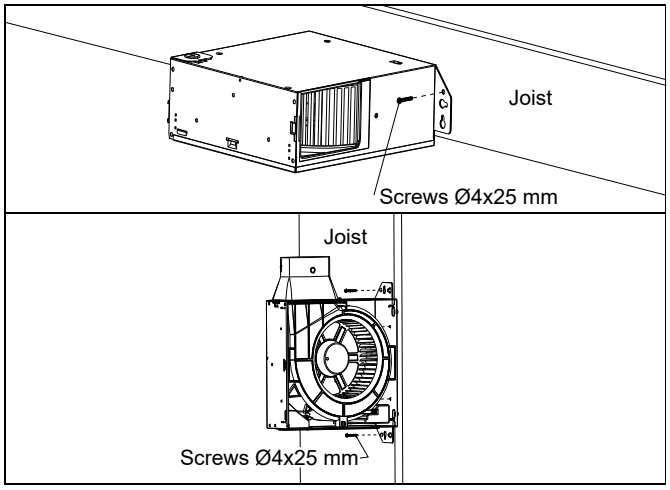

2. Insert suspension bracket into the channel on housing.

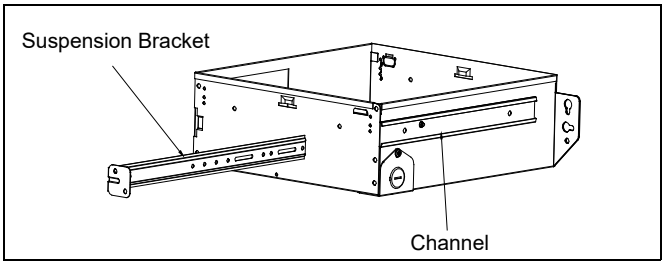

3. Extend suspension bracket to the width of the joists. Make sure the fan body is level and perpendicular with the joist, and flush with ceiling surface.
4. Fasten suspension bracket to joist with tapping screws (ø 4×25 mm).
5. Secure suspension bracket to housing with screw (#8-32x5/16").

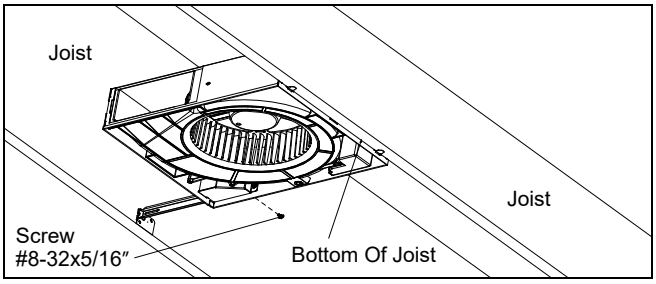

Installation III (Retrofit installation):

1. Remove fan body from housing can by releasing 3 screws (M4x45 mm). Unplug fan power connector from junction box.

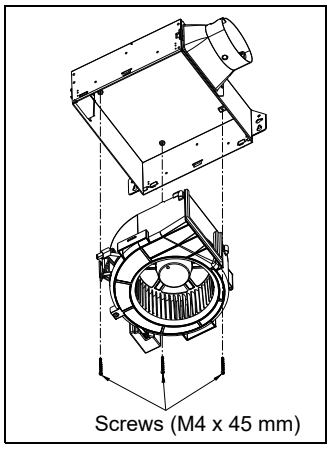

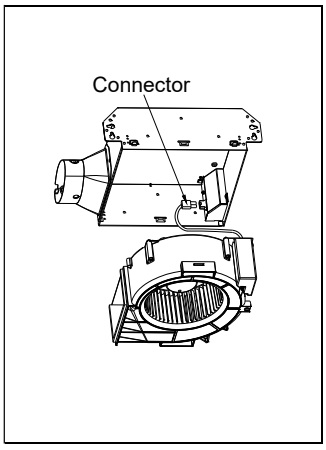

2. Position housing so that it is centered in existing opening. Make sure housing is flush with finished ceiling or wall. After making electrical connection, driving screws (Ø4×25 mm) through the housing where indicated by arrows.

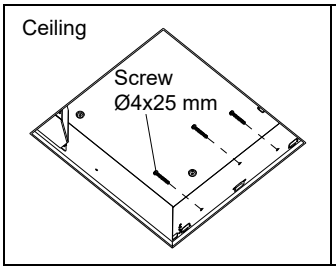

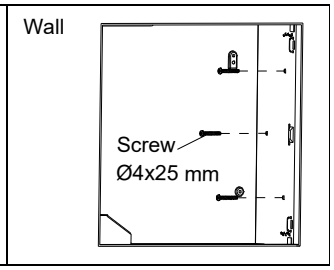

3. Attach the duct connector from the housing can inside and tape all ductworks connection, secure by using one screw (M4x6 mm). Insert and secure fan body.

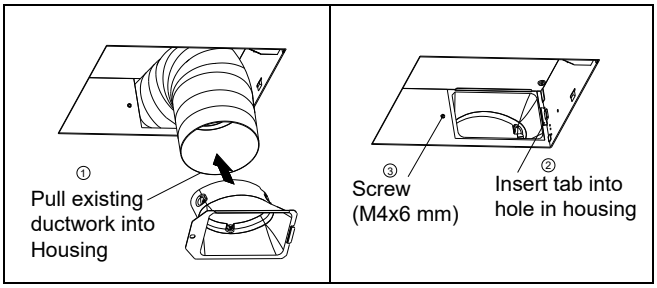

DUCT CONNECTION

Connection method for 4'' oval duct connector

1. Insert the duct into the duct connector and tape all ductworks connection to make them secure and air tight.
2. Install the duct with a gradient 1°~2° to the outside.

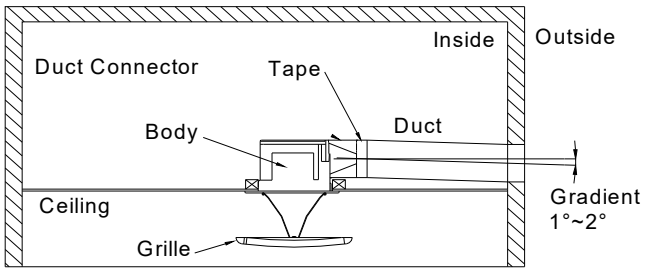

Connection method for 3'' round duct connector

3. 4" oval to 3" round duct adapter, sold separately (VFRU-29-10DA).
4. Please follow step "1" and "2" to install.

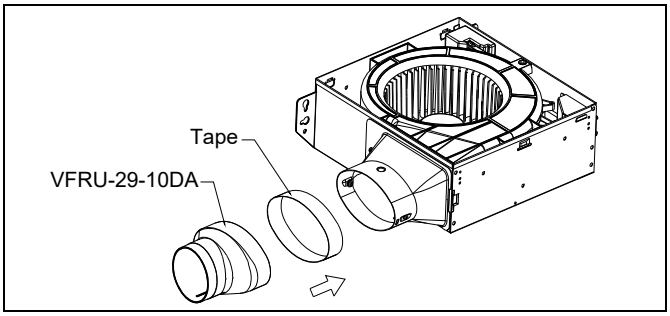

CONNECT WIRING

1. Remove wiring cover from housing. Choose a hole and use a slotted screwdriver to remove it.

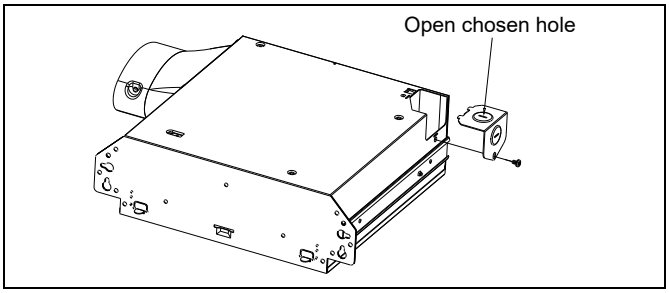

2. Follow all local electrical and safety codes, ANSI/NFPA70. NEVER place a switch where it can be reached from a tub or shower.

3. Turn off electrical power at service entrance. Use proper UL approved wire nuts (not provided) to connect house branch-circuit wires with ventilating fan-housing wires. Connect wires as shown in wiring diagrams. 14 AWG (2.1 mm²) is the smallest conductor that shall be used for branch-circuit wiring.

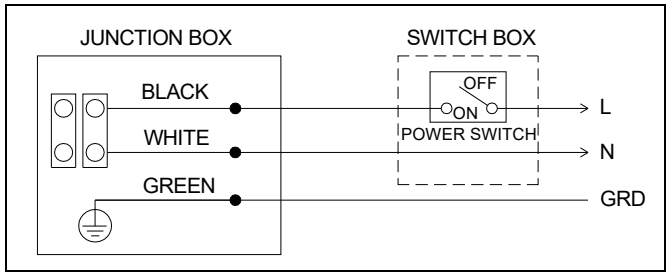

4. Push all wires into wiring compartment of unit and replace wiring cover.

TEST RUN & GRILLE ATTACHMENT

1. When the power on, check for abnormal vibration or sound.
2. Insert the mounting springs into the slots and mount the grille to the fan unit.

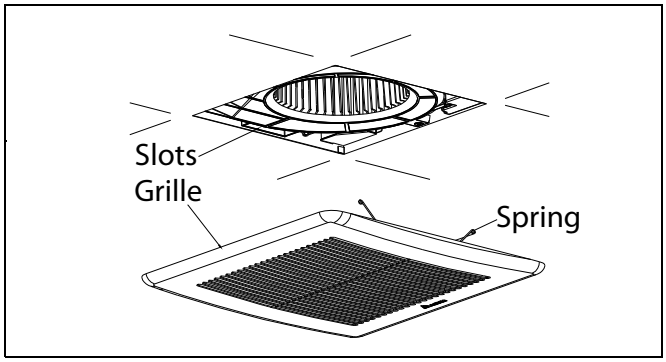

OPERATION

Turn on the power switch to operate ON and LED indicator is green.

MAINTENANCE

WARNING:

Disconnect power source before working on unit. Routine maintenance must be done every year.

CAUTION:

1. Never use gasoline, benzene, thinner or any other such chemicals for cleaning the ventilating fan.
2. Do not allow water to enter motor.
3. Do not soak resin parts in water over 140°F (60°C).

CLEANING：

1. Pull down the spring to remove grille.
2. Wash and clean grille. (Use non-abrasive kitchen detergent, wipe dry with new cloth.)
3. Using a cloth dampened with non-abrasive kitchen detergent, remove dust and dirt from ventilating fan. Wipe dry with new cloth.
4. Replace grille.

DIMENSIONS

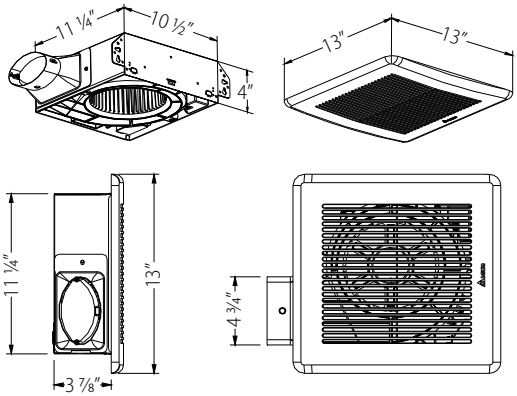

SPECIFICATIONS

Model No.	Voltage (V)	Frequency (Hz)	Power @ 0.1SP (W)	Air Flow @ 0.1SP (CFM)	Power (W)	Weight (lb.)
SLM80	120	60	8.5	80	13	6.6
SLM100	120	60	14.5	100	20	6.6

Note: Design and specifications subject to change without notice.

WARRANTY

DELTA ELECTRONICS THREE YEAR LIMITED WARRANTY

Delta Electronics Inc. ("Delta Electronics") warrants to the original consumer purchaser in the USA and Canada that the Breez ventilation fan products will be free from defects in material or workmanship. This warranty is limited to three (3) years from the original date of purchase.

Limitations and Exclusions

1. During the warranty period, a replacement for any defective product will be supplied free of charge for installation by the consumer. The warranty provided herein does not cover charges for labor or other costs incurred in the troubleshooting, repair, removal, and installation service.
2. All returns of defective parts or products must include the product model number, and must be made through an authorized Delta Electronics distributor. Authorized returns must be shipped prepaid. Repaired or replacement products will be shipped by Delta Electronics F.O.B. shipping point.
3. Delta Electronics shall not be liable for any indirect, incidental, consequential, punitive, or special damages arising out of or in connection with products use or performance, regardless of the form of action whether in contract, tort (including negligence), strict product liability or otherwise.
4. This warranty does not extend to fluorescent lamp starters and tubes.
5. The warranty does not cover if user does not comply with manufacture's installation manual.
6. To qualify for warranty service, you must notify Delta Electronics at the address or telephone number below.
7. Delta Electronics shall have no liability to the original owner-user with respect to any defect caused by abuse, misuse, neglect, improper transportation or storage, improper testing, improper installation, improper operation, improper use, improper maintenance, improper repair, improper alteration, improper modification, tampering or accident of products or parts thereof, or unusual deterioration or degradation of products or parts thereof due to a physical environment beyond the requirements of products' specifications.

Address: 46101 Fremont Boulevard, Fremont, CA 94538
US Toll Free Number:
1-888-979-9889 - Technical Support
1-877-685-4384 - Customer Sales Support