BROAN

LoSone Select® SPECIFICATION SHEET

LOSONE SELECT® IN-LINE VENTILATORS MODELS L400L, L400KL, L500L, L500KL, L700L

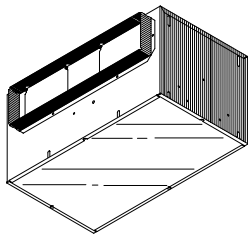

Incredibly reliable. Unbelievably quiet. Offering the CFM choices you need at the lowest sound levels in the industry.

FEATURES

BLOWER:
- Low RPM for quiet operation
- Resilient anti-vibration mounts
- Balanced, polymeric, centrifugal blower wheel for quiet, efficient performance (Models L400KL & L500KL - dynamically-balance metal wheel)
- Permanently lubricated, thermally protected motor
- Plug-in motor rated at 120 VAC
- Designed for continuous operation

HOUSING:
- Rugged galvanized steel
- 4½" x 18½" duct connector
- May be installed in ceiling or wall (size permitting)
- 8-position mounting brackets for easy installation and greater adaptability to various mounting requirements
- Automatic backdraft damper located within duct connector
- Factory-shipped in horizontal discharge position
- Removable panel allows easy motor access without disturbing ductwork
- Models L400KL & L500KL suitable for kitchen installations

CONTROLS:
- Model 57V (Ivory) / 57W (White) 3-Amp, Electronic Variable Speed Control
- Model 59V (Ivory) / 59W (White) 60-Minute Time Control
- Model 61V (Ivory) / 61W (White) 15-Minute Time Control
- Model 71V (Ivory) / 71W (White) 12-Hour Time Control
- Model 72V (Ivory) / 72W (White) 6-Amp, Electronic Variable Speed Control
- Model 80L Electronic Speed Control (Internal)

TYPICAL SPECIFICATION

Ventilator shall be Broan Model L400L, (L400KL), (L500L), (L500KL), (L700L).

Ventilator shall have galvanized steel housing. Housing to have adjustable mounting brackets and removable panel to allow motor access without disturbing ductwork.

Automatic backdraft damper to be located within duct connector. Duct connector, blower assembly and wiring plate shall be adjustable for either horizontal or vertical installation.

Blower unit shall be removable from housing and will have a polymeric (metal - L400KL & L500KL), balanced, centrifugal-type blower wheel. Motor to be permanently lubricated and mounted with resilient anti-vibration mounts. RPM not to exceed number listed for each model.

Air delivery shall be no less and sound levels no greater than listed for each model. All air and sound ratings shall be certified by AMCA. Units to be UL listed.



"Broan-NuTone LLC certifies that the models shown herein are licensed to bear the AMCA Seal. The ratings shown are based on tests and procedures performed in accordance with AMCA Publication 211 (and AMCA Publication 311 if sound is also certified) and comply with the requirements of the AMCA Certified Ratings Program"

Broan-NuTone LLC, 926 West State Street, Hartford, WI 53027 (1-800-637-1453)
Broan-NuTone Canada, Inc., 1140 Tristar Drive, Mississauga, Ontario, L5T 1H9 (1-888-882-7626)

REFERENCE	QTY.	REMARKS	Project
			Location
			Architect
			Engineer
			Contractor
			Submitted by Date

PERFORMANCE RATINGS - LOSONE SELECT® IN-LINE VENTILATORS MODELS L400L, L400KL, L500L, L500KL, & L700L

AMCA LICENSED PERFORMANCE

			CFM / SONES - AT STATIC PRESSURES (Ps - inches of H_2O)											
MODEL NO.	**NOMINAL VOLTAGE**		**0.0" Ps**	**.10" Ps**	**.125" Ps**	**.250" Ps**	**.375" Ps**	**.50" Ps**	**.625" Ps**	**.750" Ps**	**.875" Ps**	**1.0" Ps**	**NOMINAL RPM**	**AMPS @60 Hz**	**WATTS**
L400L	120 VAC	**CFM St. Thr.**	450	415	406	360	313	271	223	167	90	6	775	1.4	146
		SONES St. Thr.	1.4	1.6	1.6	1.9	2.2	2.6	2.9	3.4	3.6	3.9			
		CFM Rt. Ang.	442	415	408	372	336	296	239	193	111	28	875	1.4	146
		SONES Rt. Ang.	1.6	1.7	1.7	2.0	2.4	2.6	3.1	3.4	3.9	4.1			
L400KL	120 VAC	**CFM St. Thr.**	420	385	375	330	284	243	202	153	78	12	715	1.4	146
		SONES St. Thr.	3.0	2.7	3.1	3.6	4.0	4.0	4.6	5.0	5.2	5.4			
		CFM Rt. Ang.	420	391	385	352	316	276	226	181	105	46	805	1.4	146
		SONES Rt. Ang.	2.1	2.4	2.5	1.9	2.2	2.8	3.0	3.3	3.7	4.2			
L500L	120 VAC	**CFM St. Thr.**	546	526	519	496	472	447	407	364	306	232	890	2.2	232
		SONES St. Thr.	2.4	2.4	3.4	3.7	3.9	3.8	3.9	4.0	4.3	4.3			
		CFM Rt. Ang.	528	516	513	494	470	446	415	389	334	247	990	2.2	232
		SONES Rt. Ang.	2.9	3.8	3.4	3.7	3.5	3.6	3.9	4.0	4.2	4.4			
L500KL	120 VAC	**CFM St. Thr.**	495	476	472	450	426	395	360	326	294	247	805	2.2	232
		SONES St. Thr.	3.2	3.7	3.8	4.2	3.9	4.2	4.7	5.0	5.4	5.5			
		CFM Rt. Ang.	494	482	477	462	442	417	387	359	317	263	905	2.2	232
		SONES Rt. Ang.	3.5	4.1	4.4	4.3	4.7	5.1	5.1	5.2	5.3	6.0			
L700L	120 VAC	**CFM St. Thr.**	704	686	681	656	631	604	575	533	480	412	1090	2.9	313
		SONES St. Thr.	3.6	3.8	3.7	3.9	4.0	4.2	4.3	4.4	4.7	5.0			
		CFM Rt. Ang.	680	667	663	644	621	594	557	513	440	342	1205	2.9	313
		SONES Rt. Ang.	5.0	5.0	5.0	5.3	5.2	5.1	5.3	5.5	5.4	5.5			

Performance ratings include the effects of backdraft damper in the airstream. Speed (RPM) shown is nominal. Performance is based on actual speed of test. The sound ratings shown are loudness values in fan sones at 5' (1.5m) in a hemispherical free field calculated per AMCA Std. 301. Values shown are for Installation Type D: Ducted inlet, Ducted outlet. Ratings do not include the effect of duct end correction. Performance ratings include the effects of 18 feet of round inlet duct and, if needed, a rectangular to round duct transition in the airstream. Performance shown is for Installation Type D: Ducted inlet, Ducted outlet.

"Broan-NuTone LLC certifies that the models shown herein are licensed to bear the AMCA Seal. The ratings shown are based on tests and procedures performed in accordance with AMCA Publication 211 (and AMCA Publication 311 if sound is also certified) and comply with the requirements of the AMCA Certified Ratings Program."

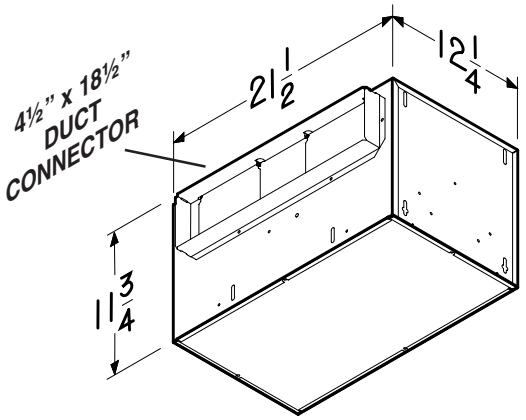

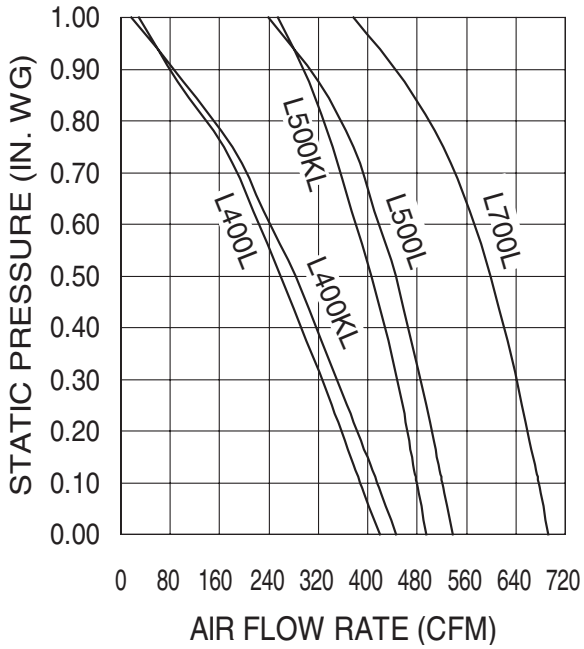

WEIGHT

MODEL NO.	SHIPPING WT.
L400L, L500L	33.9 lbs.
L400KL, L500KL	36.3 lbs.
L700L	34 lbs.

Broan-NuTone LLC, 926 West State Street, Hartford, WI 53027 (1-800-637-1453)
Broan-NuTone Canada, Inc., 1140 Tristar Drive, Mississauga, Ontario, L5T 1H9 (1-888-882-7626)