breez GreenBuilder

MODEL GBR80HLED

(Fan/Dimmable LED Light with Humidity Sensor – 80 CFM)

HVI 2100 CERTIFIED

Full Speed:
80 CFM/0.8 Sones @ 0.1" SP, 11 Watts
63 CFM/1.5 Sones @ 0.25" SP, 13 Watts

Low Speed:
50 CFM/<0.3 Sones @ 0.1" SP, 4.4 Watts
33 CFM/0.8 Sones @ 0.25" SP, 6.0 Watts

ENERGY STAR

c UL us

Description

Low noise ceiling mount ventilating Fan/Dimmable LED Light with humidity sensor rated for continuous running. Fan is ENERGY STAR® qualified, HVI, UL, and cUL certified, and can be used to comply with ASHRAE 62.2 Intermittent Local Exhaust, CA Title 24, and CAL Green requirements.

DC Motor/Blower

- Power rating of 120 volts/60Hz
- DC Brushless motor engineered to run continuously
- Motor equipped with thermal cutoff fuse
- Removable with permanently lubricated plug-in motor
- Allows fan to operate in full speed mode or humidity control mode by manual switch
- For humidity control mode, when humidity is above the user-adjustable set-point, fan runs at full speed (80 CFM). When humidity is below the set-point, the fan runs continuously at a pre-set lower level (0 or 50 CFM)
- Built-in soft start function to increase bearings' life
- Automatically powers OFF when impeller is locked abnormally
- Self-compensating motor speed for intended airflow when static pressure is encountered

Housing

- Galvanized steel body
- Detachable 4" diameter duct adapter
- Built-in backdraft damper
- Easy installation

Grille

- Attractive design using ABS material
- Attaches directly to housing with torsion springs

Light

- 13-Watt LED Light output 850 Lumens, 3000K, and 90CRI
- Dimmable Lighting (dimmer switch not included)

LED Indicator

- Blue and amber LED indicator lights to show humidity sensor and full speed modes

Warranty

- 3-Year limited warranty

TYPICAL SPECIFICATION

Ventilation fan shall be Delta Breez model GBR80HLED; ENERGY STAR qualified with DC brushless motor engineered to run continuously for a minimum 70,000 hours; airflow rating of 80 CFM and loudness rating of 0.8 Sones at 0.1 static pressure as certified by the Home Ventilating Institute (HVI); power consumption of 11 Watts with efficiency rating of 7.2 CFM/Watt at 0.1" static pressure; fan will feature LED indicator running light, motor lock protection and self-compensating motor speed for intended airflow when static pressure is encountered. UL and cUL listed for tub/shower enclosure when used with GFCI-protected branch circuit wiring.

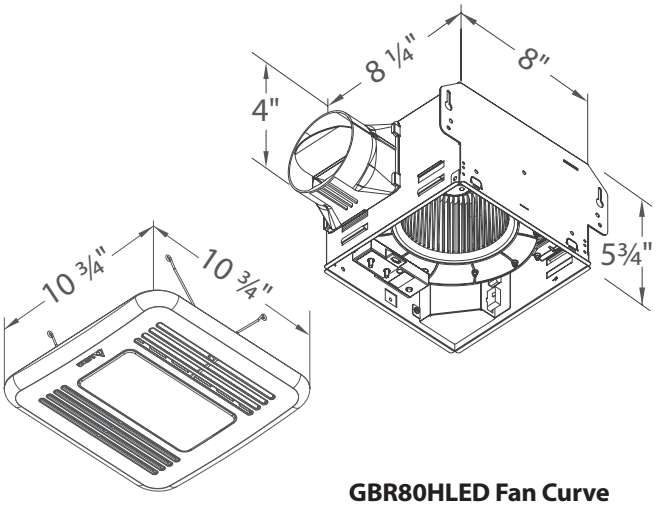

GreenBuilder GBR80HLED - 80 CFM

Fan Speed	Continuous Low Speed		Full Speed	
Static Pressure (Inches w.g.)	0.1	0.25	0.1	0.25
Air Flow (CFM)	50	33	80	63
Sones	0.5	1.0	0.8	1.5
Power Consumption (Watts)	4.4	6.0	11	13
Energy Efficiency (CFM/Watts)	11.3	5.5	7.2	4.8
Current (Amps)	0.33 Max			
Power Rating (V/Hz)	120/60			
Dimmable LED Light (Watts)	13			

LED DIMMABLE

Control Options

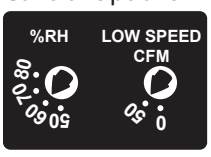

GBR80HLED Fan Curve

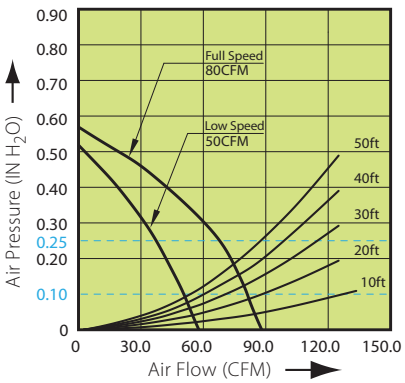

Model	Quantity	Comments	Project:
			Location:
			Architect:
			Engineer:
			Contractor:
			Submitted by:
			Date:

46101 Fremont Blvd. Fremont, CA 94538 | tel 1.888.979.9889 | www.deltabreez.com