HUMIDITY SENSING BATH FAN

MODEL VFB070B3H1 / SLM70H

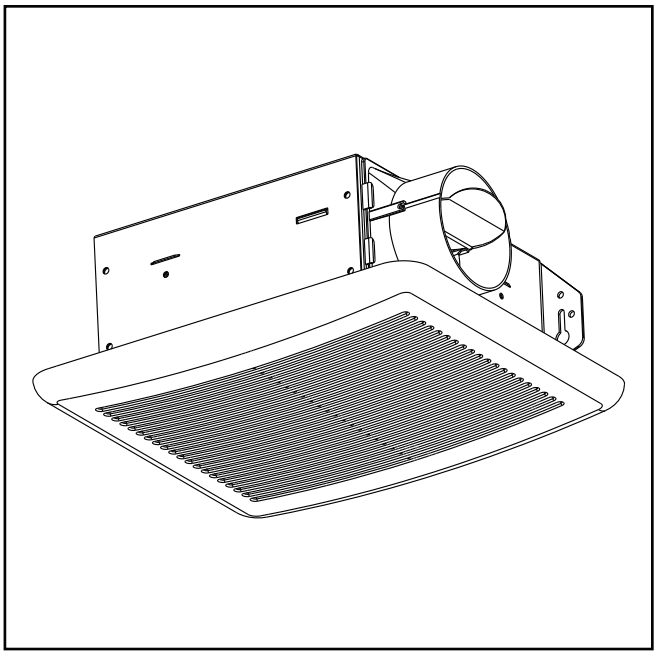

TABLE OF CONTENTS

Package Contents	2
General Safety Information	3
Preparation and Wiring Diagrams	4
Assembly Instructions - New Construction	5
Assembly Instructions - Existing Construction	6
Grille Installation	8
Humidity Sensing Fan Operation	8
Care and Maintenance	9
Troubleshooting	10
Dimensions	11
Product Specifications	11
Warranty	12

READ AND SAVE THESE INSTRUCTIONS

Address: 46101 Fremont Boulevard, Fremont, CA 94538

US Toll Free Number: 1-888-979-9889

PACKAGE CONTENTS

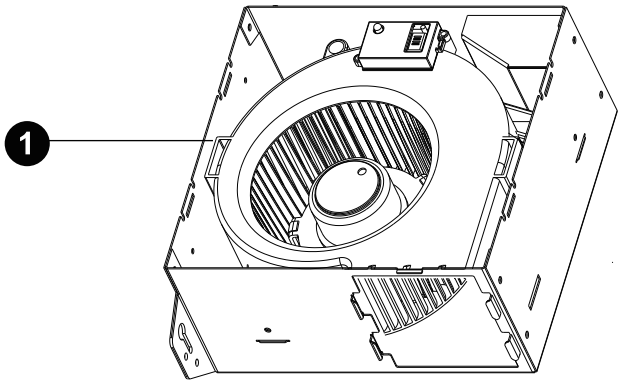

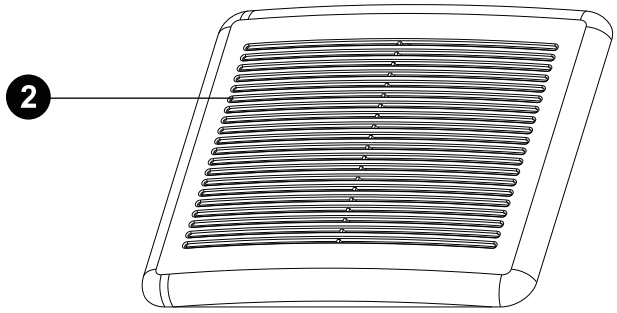

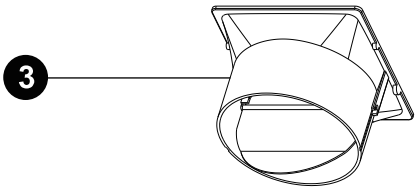

PART	DESCRIPTION	QTY
❶	Fan Body	1
❷	Grille	1
❸	Duct Connector	1

GENERAL SAFETY INFORMATION

READ AND SAVE THESE INSTRUCTIONS
GENERAL SAFETY INFORMATION

1. Make sure that the electric service supply voltage is AC 120V, 60Hz.
2. Follow all local electrical and safety codes, as well as the National Electrical Code (NEC) and the Occupational Safety and Health Act (OSH Act).
3. Always disconnect the power source before working on or near the ventilating fan, motor or junction box.
4. Protect the power cord from sharp edges, oil, grease, hot surfaces, chemicals or other objects.
5. Do not kink the power cord.
6. Do not install the unit where ducts are configured as shown in Fig.A.
7. Provide suction parts with proper ventilation.
8. This unit is UL Listed for use over a bathtub or shower when installed in a GFCI protected branch circuit.

WARNING

TO REDUCE THE RISK OF FIRE, ELECTRIC SHOCK, OR INJURY TO PERSONS, OBSERVE THE FOLLOWING:

1. Use this unit only in the manner intended by the manufacturer. If you have questions, contact the manufacturer.
2. Before servicing or cleaning the unit, switch the power off at the service panel and lock the service disconnecting means to prevent the power from being switched on accidentally. When the service disconnecting means cannot be locked, securely fasten a prominent warning device, such as a tag, to the service panel.
3. Installation work and electrical wiring must be done by a qualified person(s) in accordance with all applicable codes and standards, including fire-rated construction.
4. Sufficient air is needed for proper combustion and exhausting of gases through the flue (chimney) of fuel burning equipment to prevent backdrafting. Follow the heating equipment manufacturer's guideline and safety standards such as those published by the National Fire Protection Association (NFPA), and the American Society for Heating Refrigeration and Air Conditioning Engineers (ASHRAE) and local code authorities.
5. When cutting or drilling into the wall or ceiling, do not damage electrical wiring and other hidden utilities.
6. Ducted ventilating fans must always be vented to the outdoors.
7. If this unit is to be installed over a tub or shower, it must be marked as appropriate for the application and be connected to a GFCI (Ground Fault Circuit Interrupter) – protected branch circuit.
8. Do not use this unit with any other solid-state control device. Solid-state controls may cause harmonic distortion, which can cause a motor humming noise.
9. NEVER place a switch where it can be reached from a tub or shower.
10. Not to be installed in a ceiling thermally insulated to a value greater than R50. (This is required for installation in Canada only).

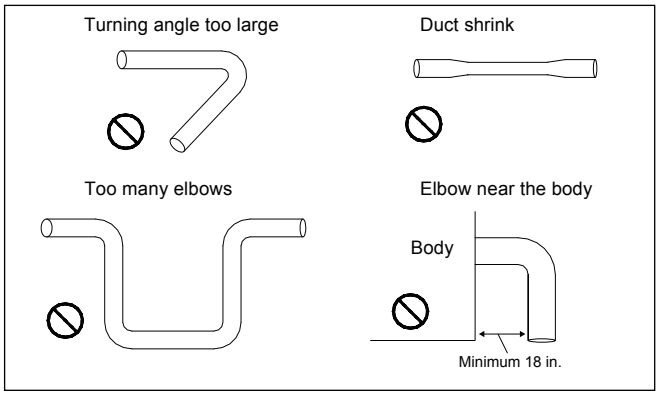

Fig. A

CAUTION

1. For general ventilating use only. Do not use to exhaust hazardous or explosive materials and vapors.
2. Not for use in cooking areas. (Fig.B)
3. This product must properly connect to the grounding conductor of the supply circuit.
4. To reduce the risk of injury to persons, install the fan at least 8.2 feet (2.5m) above the floor.

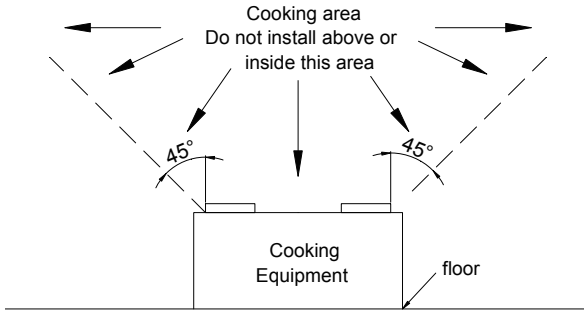

Fig. B

PREPARATION

Tools Required for Assembly (not included): Hammer, Flathead Screwdriver, Wire Nuts, Nails, Duct Tape, Phillips Head Screwdriver, Utility Knife

Helpful Tools (not included): Electric Drill, Drill Bits

WARNING: Turn off electricity at breaker box before beginning installation.

- Carefully remove unit from carton.
- Check area above installation location to be sure that wiring can run to the planned location and that duct work can be run. Make sure the area is sufficient for proper ventilation.
- Inspect duct work and wiring before proceeding with installation.
- Before installation, provide inspection and future maintenance access at a location that will not interfere with installation work.
- You may need the help of a second person to install this fan: one person on the attic side and one on the room side.

Note: Installations may vary depending on how the previous bath fan was installed. Supplies necessary for the installation of your bath fan are not all included. However, most are available at your local home improvement or hardware store.

DIMENSION REQUIREMENTS

Housing Dimension (L)	Housing Dimension (W)	Housing Dimension (H)
7 1/2 in.	7 1/4 in.	4 in.

WIRING DIAGRAM

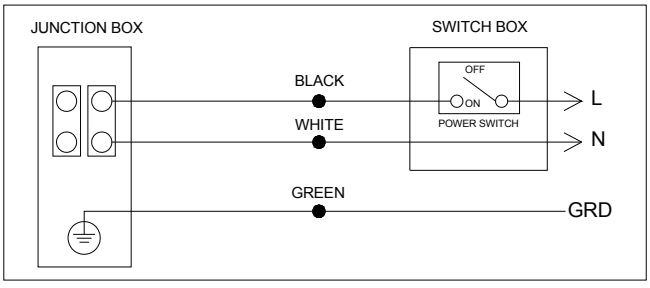

Note: Do not use with timer switch.

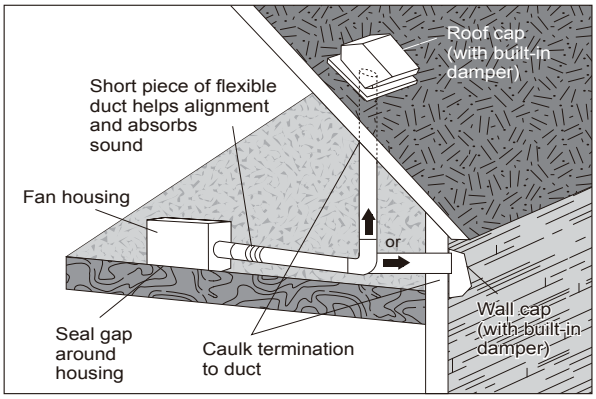

- Proper insulation around the fan to minimize building heat loss and gain. 3” circular duct is recommended for installation. The ducting from this fan to the outside of building has a strong effect on the air flow, noise and energy use of the fan. Use the shortest, straightest duct routing possible for best performance, and avoid installing the fan with smaller ducts than recommended.
  Insulation around the ducts can reduce energy loss and inhibit mold growth. Fans installed with existing ducts may not achieve their rated air flow.
- Locate unit above (GFCI-protected circuit required) or within 5 feet of the shower head.
- Locate unit away from heating or cooling sources which can affect humidity levels.
- Do not locate near window. Unit may respond to the outdoor humidity level.
- Unit must be installed in ceiling to properly sense moisture.
- Locate unit only on flat ceilings up to 12 feet high for proper sensing.
- The fan will operate most efficiently when located where the shortest possible duct run and minimum number of elbows will be needed.
- Use a roof cap or wall cap that has a built-in damper to reduce backdrafts.

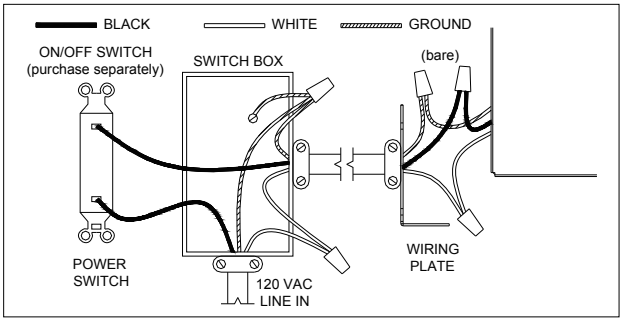

ASSEMBLY INSTRUCTIONS

NEW CONSTRUCTION

BEFORE INSTALLATION

Turn off power source. Review all safety precautions.

1. Attach the Duct Connector ❸ to the Fan Body ❶ .

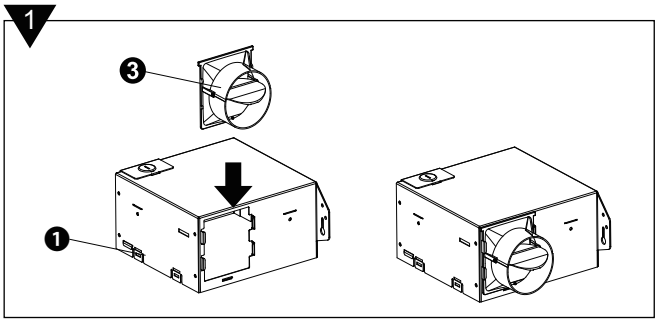

2. Remove the wiring box cover from the Fan Body ❶ . Remove the wiring knockout from the wiring box cover with a flathead screwdriver (not included).

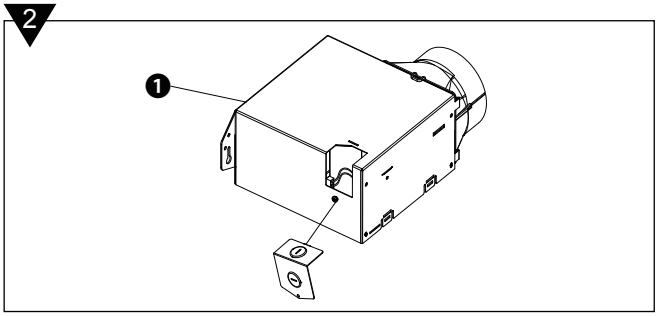

3. Place the Fan Body ❶ next to a ceiling joist or wall stud. The Fan Body ❶ should be level and perpendicular to the joust or stud

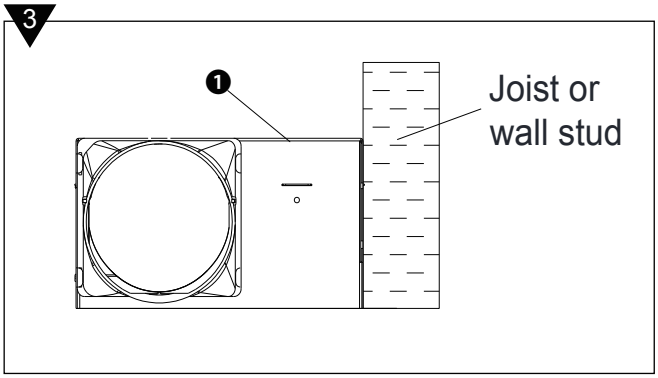

4. Mount the Fan Body ❶ to the joist or stud using nails (not included) were indicated.

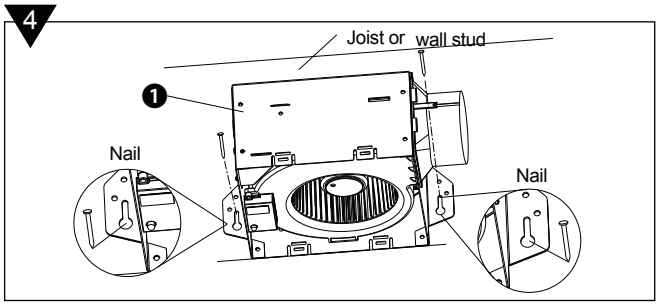

ASSEMBLY INSTRUCTIONS

5.Pull the wire through the hole and into the junction box(not included), secure 120VAC house wiring from the wall diagram on page4. 14AWG is the smallest conductor that shall be used for branch-circuit wiring.

Push the wires back through the hole. Reattach the wiring box cover.

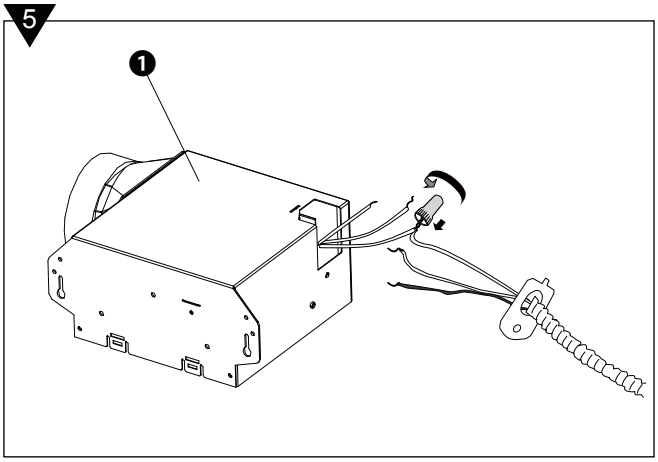

6. Install a circular 3 in. duct (not included) and secure it with duct tape or clamps (neither included).

Finish ceiling work. The ceiling hole should be aligned with the edge of the fan housing.

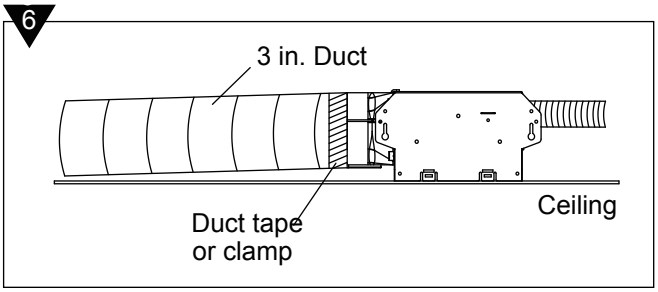

EXISTING CONSTRUCTION

BEFORE INSTALLATION

Turn off power source. Review all safety precautions.

1. Remove existing fan.

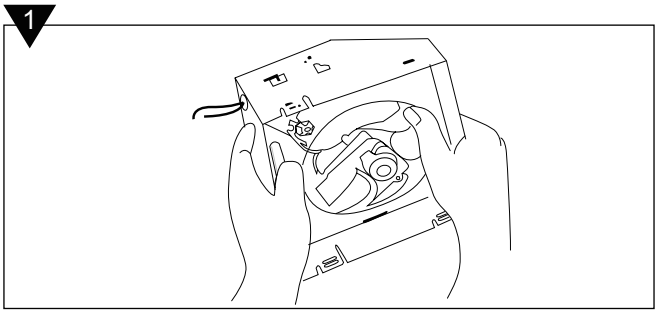

2. Measure the opening to ensure it is large enough to accommodate the new Fan Body(7 1/2in. x 7 1/4in.).

Note: 7 1/4 inch side of opening should be flush with the joist.

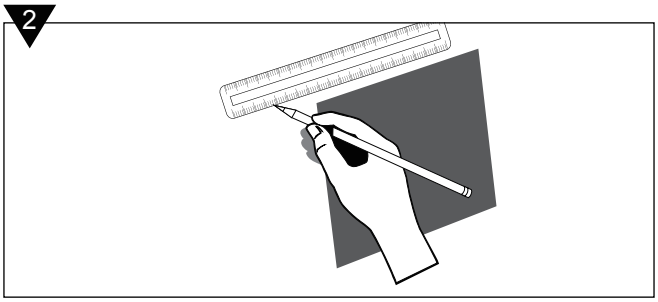

ASSEMBLY INSTRUCTIONS

3. If this fan is not replacing an old fan, be sure to cut a 7 1/2in. x 7 1/4in. opening for the Fan Body ❶ . Make sure the 7 1/4 inch side of opening is flush with the joist for installation from below.

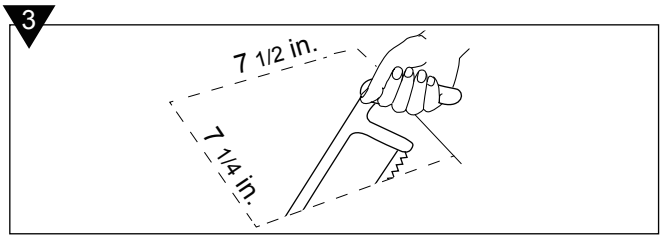

4. Attach the Duct Connector ❸ to the Fan body. Remove the wiring box cover from the Fan Body ❶ . Remove the wiring knockout from the wiring box cover with a flathead screwdriver (not included). Remove the three screws that hold the fan motor assembly in place. Remove the fan motor assembly from the Fan Body ❶ . Unplug fan connector.

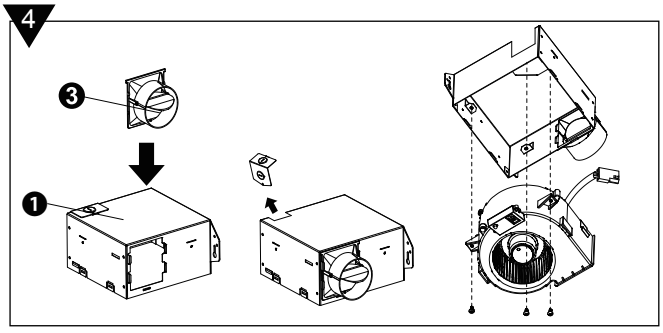

5. Pull the wire through the hole and into the junction box(not included), secure 120VAC house wiring from the wall diagram on page4. 14AWG is the smallest conductor that shall be used for branch-circuit wiring.

   Push the wires back through the hole. Reattach the wiring box cover.

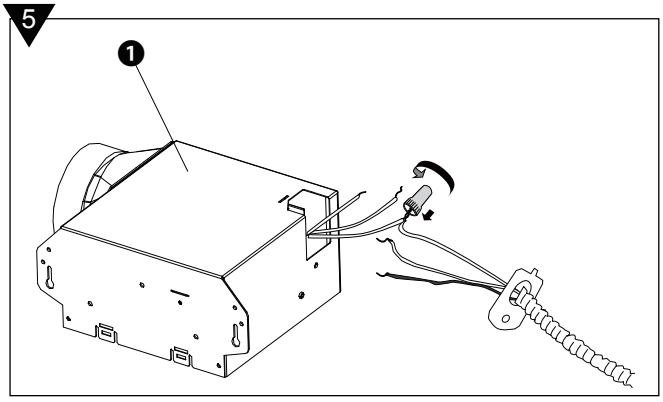

6. Install a circular 3 in. duct (not included) and secure it with duct tape or clamps (neither included).

   Mount the Fan Body ❶ to the joist or stud using nails (not included) were indicated.

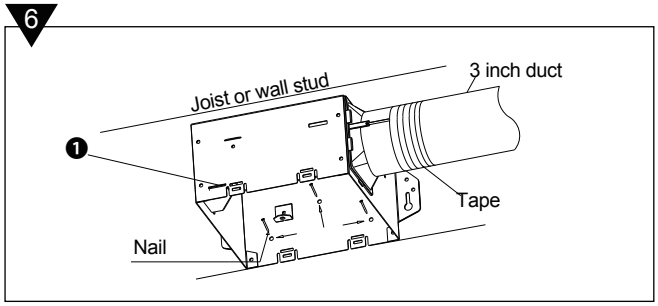

7. Plug the fan connector and fan assembly back into the Fan Body ❶ . Reattach the fan assembly using the three screws removed in step 4.

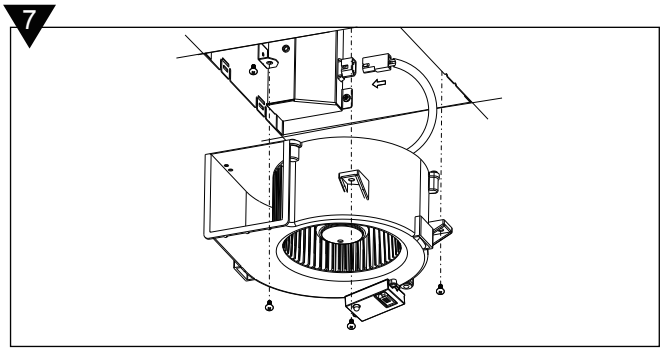

GRILLE INSTALLATION

1. Pinch the mounting springs on the Grille ❷ , and insert them into the narrow rectangular slots inside the fan. Push the Grille ❷ up toward the ceiling.

   Turn on electricity at the breaker box after finishing installation.

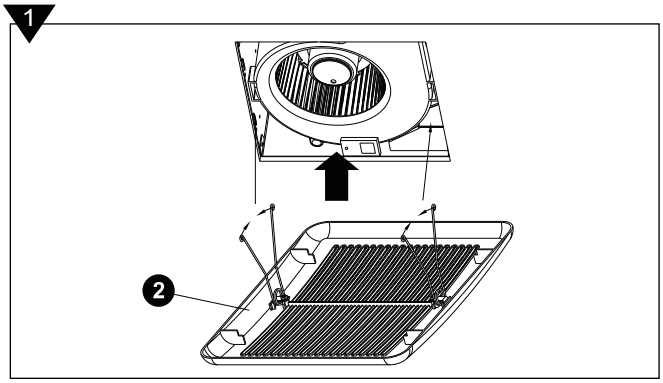

HUMIDITY SENSING FAN OPERATION

1. **Humidity Sensing Mode:** Flip wall switch to “ON” position. The LED indicator light in the fan will be BLUE. The fan will automatically start when the humidity level in the room is above 60%.
   If humidity level is below 60%, the fan will stop automatically.

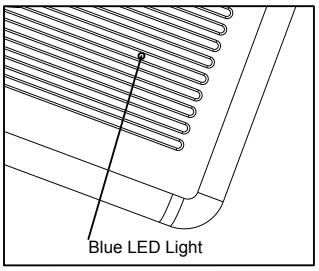

2. **Full Speed Mode:** Cycle wall on/off switch. LED indicator light in fan will be AMBER.

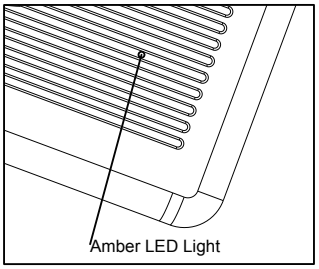

3. **Fan Off:** Move wall on/off switch to “OFF” position.

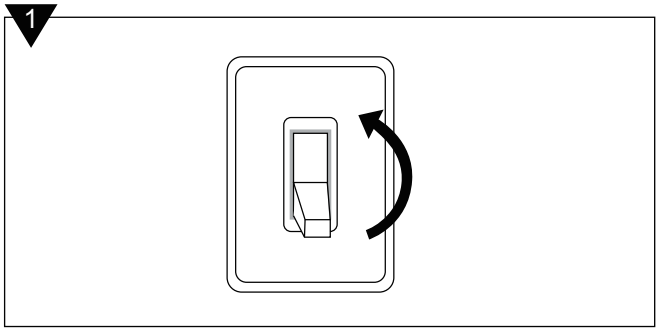

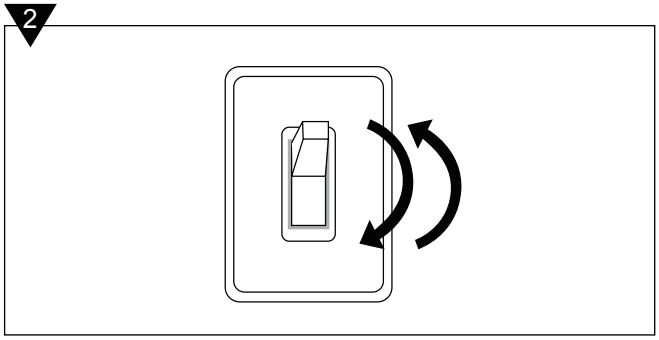

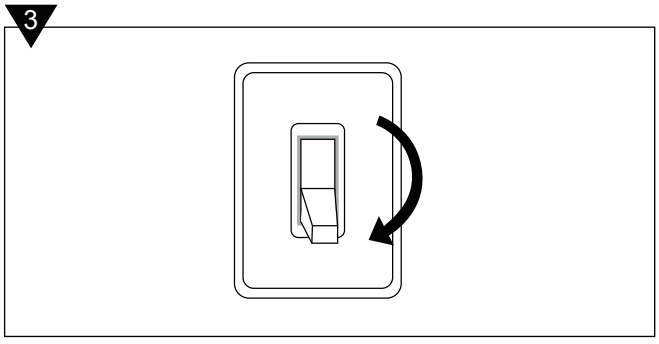

CARE AND MAINTENANCE

See safety information before proceeding. Routine maintenance should be done at least once a year.

- Never use solvents, thinner or harsh chemicals when cleaning the fan.
- Do not allow water to enter the motor.
- Do not immerse metal parts in water.
- Do not immerse resin parts in water over 140º Fahrenheit.

Turn off power source. Review all safety precautions.

1. To remove grille ❷ , squeeze springs and pull down.

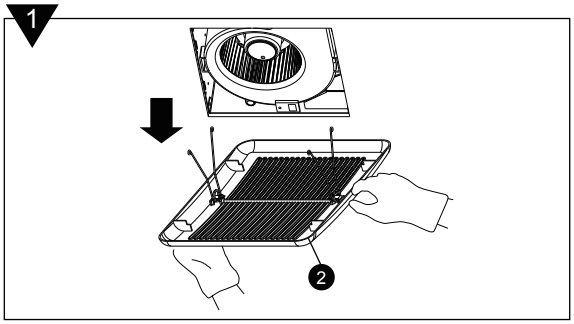

2. Wash and clean the grille ❷ in a sink and dry with a cloth.

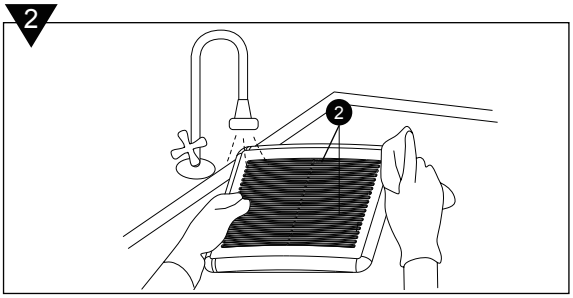

3. Remove dust and dirt from the fan body ❶ with a vacuum cleaner.

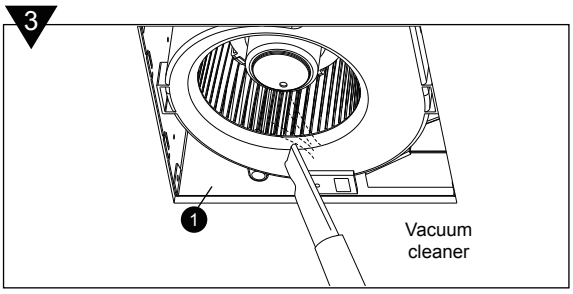

4. Dampen cloth with dust detergent and wipe the fan body ❶ . Then wipe dry with a clean cloth.

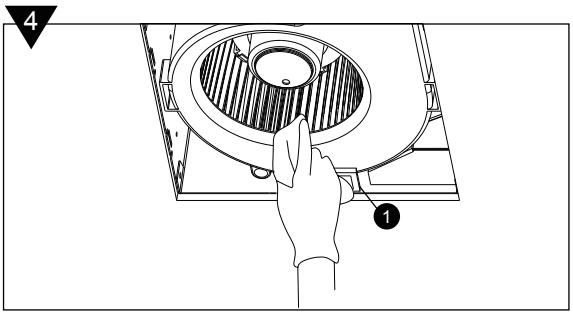

5. Replace grille ❷ back onto fan body ❶ .
6. Turn on power source to operate fan again.

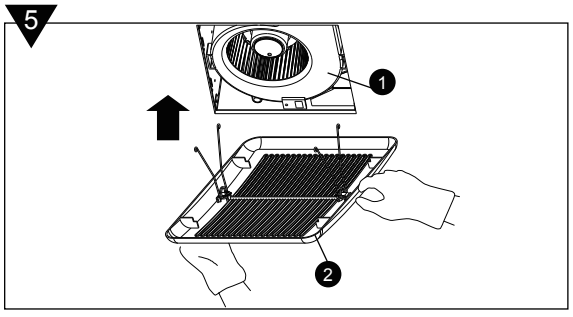

TROUBLESHOOTING

PROBLEM	POSSIBLE CAUSE	CORRECTIVE ACTION
The fan is not turning on	1. Power off 2. Faulty switch 3. Faulty wire connection	1. Make sure power supply is on. 2. Test or replace switch. 3. Check wire in switch box.
The fan seems louder than it should	1. CFM too great 2. Damper not working properly or damaged 3. Bend in duct too close to fan discharge 4. Fan discharge reduced to fit smaller duct 5. Fan body not securely attached	1. Be sure the CFM rating on the fan matches the size of your room. 2. Check damper to ensure it is opening and closing properly. If the damper has become damaged, please call Customer Service. 3. Be sure you do not have any sharp bends in duct closer than 18 in. to the fan discharge. 4. Use recommended size ducting to reduce fan noise. 5. Be sure the fan is securely attached to your ceiling joists.
The fan is not clearing the room	1. Insufficient intake airfow within room 2. Insufficient CFM	1. Be sure a door or window is slightly ajar or opened to allow airflow. The fan is not able to draw air out of the room without enough airflow to draw in from. 2. Be sure the CFM rating on the fan matches the requirements for your room size.
The fan keeps running even though the house humidity level is lower than 60% RH	1. Our sensor tolerance is +/-10% RH 2. Outdoor humidity is back drafting to the fan	1. Continue to let the fan run since it is good to keep venting the house and the electric bill is minimal (approximately less than $10 per year). 2. Turn the fan off when not in use.

DIMENSIONS

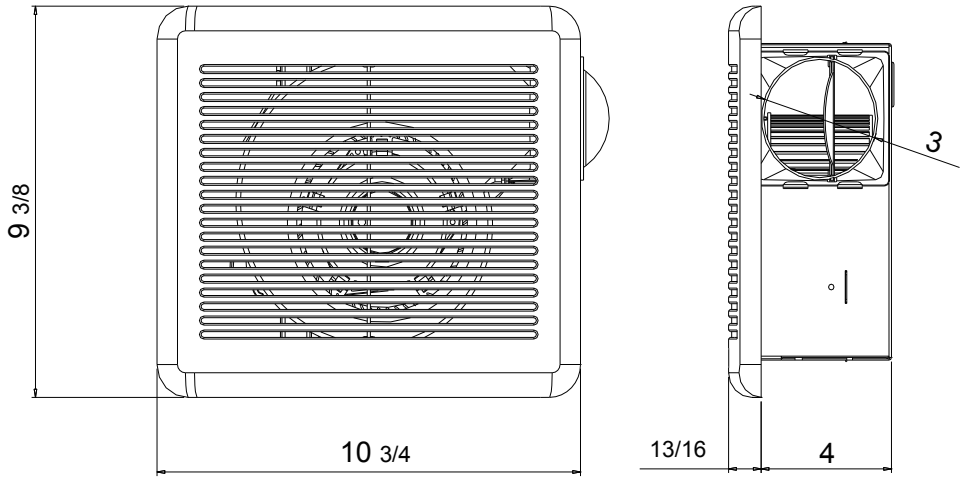

UNIT: INCH

PRODUCT SPECIFICATIONS

SPECIFICATIONS						
Model No.	Voltage (V)	Frequency (Hz)	Fan Power @ 0.1”SP (W)	Air Flow @ 0.1”SP (CFM)	Weight (lb.)	Max. Current (amps)
VFB070B3H1 SLM70H	120	60	12	70	3.65	0.29

Note: Design and specifications subject to change without notice.

WARRANTY

DELTA ELECTRONICS THREE YEAR LIMITED WARRANTY

Delta Electronics Inc. (“Delta Electronics”) warrants to the original consumer purchaser in the USA and Canada that the Breez ventilation fan products will be free from defects in material or workmanship. This warranty is limited to three (3) years from the original date of purchase.

Limitations and Exclusions

1. During the warranty period, a replacement for any defective product will be supplied free of charge for installation by the consumer. The warranty provided herein does not cover charges for labor or other costs incurred in the troubleshooting, repair, removal, and installation service.
2. All returns of defective parts or products must include the product model number, and must be made through an authorized Delta Electronics distributor. Authorized returns must be shipped prepaid. Repaired or replacement products will be shipped by Delta Electronics F.O.B. shipping point.
3. Delta Electronics shall not be liable for any indirect, incidental, consequential, punitive, or special damages arising out of or in connection with products use or performance, regardless of the form of action whether in contract, tort (including negligence), strict product liability or otherwise.
4. This warranty does not extend to fluorescent lamp starters and tubes.
5. The warranty does not cover if user does not comply with manufacturer’s installation manual.
6. To qualify for warranty service, you must notify Delta Electronics at the address or telephone number below.
7. Delta Electronics shall have no liability to the original owner-user with respect to any defect caused by abuse, misuse, neglect, improper transportation or storage, improper testing, improper installation, improper operation, improper use, improper maintenance, improper repair, improper alteration, improper modification, tampering or accident of products or parts thereof, or unusual deterioration or degradation of products or parts thereof due to a physical environment beyond the requirements of products’ specifications.

Address: 46101 Fremont Boulevard, Fremont, CA 94538

US Toll Free Number: 1-888-979-9889

www.deltabreez.com