WhisperWall™ VENTILATION FAN **Through-the-Wall**

FV-08WQ1

Specification Submittal Data / Panasonic Ventilation Fan

Description
Ventilating fan shall be Low Noise wall mount type rated for continuous run. Fan shall be ENERGY STAR® rated and certified by the Home Ventilating Institute (HVI). Evaluated by Underwriters Laboratories and conform to both UL and cUL safety standards.

Motor/Blower:
- Four–pole totally enclosed condenser motor rated for continuous run.
- Power Rating shall be 120 volts and 60 Hz.
- Fan shall be UL and cUL listed for tub/shower enclosure when used with a GFCI branch circuit wiring.
- Motor equipped with thermal–cutoff fuse.

Housing:
- Rust proof paint, galvanized steel body.
- Outside hood with built in backdraft damper and bird screen.
- Expandable sleeve up to 10".

Grille:
- Attractive design using ABS material.
- Attaches directly to housing.

Warranty:
- ALL Parts: For period of 3 years from the date of the original purchase.

Architectural Specifications:
Ventilating Fan shall be of the through-the-wall mount, ENERGY STAR rated type, with no less than 70 CFM and no more than 1.1 sone as certified by the Home Ventilating Institute (HVI). Power consumption shall be no greater than 18 watts and ENERGY STAR rated with efficiency rating of no less than 3.9 CFM/watt. The motor shall be totally enclosed, four pole condenser type engineered to run continuously. Power rating shall be 120v/60Hz. Duct diameter shall be 8". Fan shall be UL and cUL listed for tub/shower enclosure when used with GFCI branch circuit wiring. Outside hood shall be painted steel with a spring damper and foam seal. Hood shall include a bird screen. Fan shall be ASHRAE 62.2, LEED, ENERGY STAR IAP, EarthCraft, California Title-24, and WA Ventilation Code compliant.

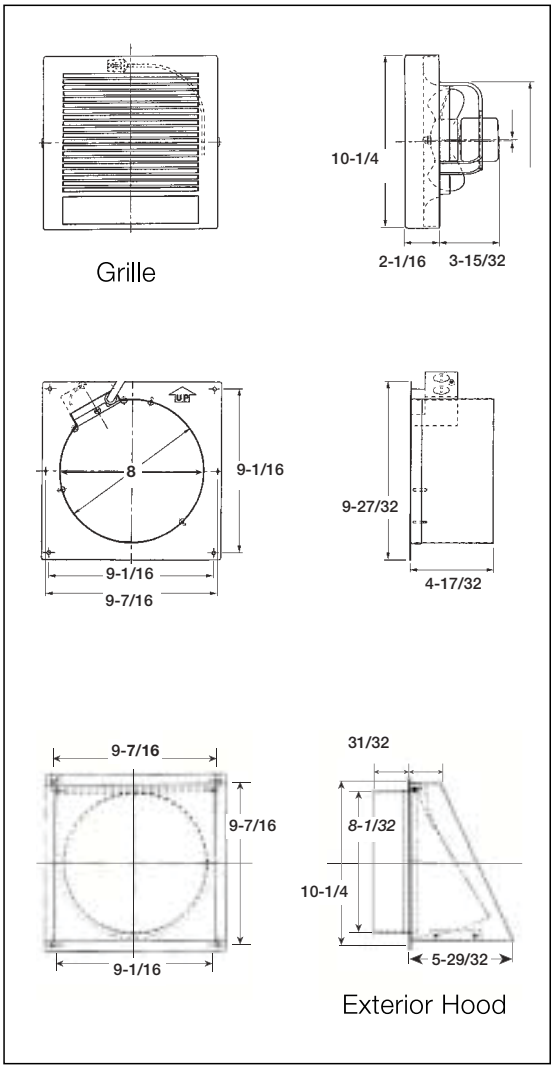

FV-08WQ1

Specifications: **WhisperWall** FV-08WQ1	
Static Pressure in inches w.g.	0.03
Air Volume (CFM)	70
Noise (sones)	1.1
Power Consumption (watts)	18
Energy Efficiency (CFM/Watt)	3.9
Speed (RPM)	660
Energy Star Rated	Yes
Washington State VIAQ Code	Yes

As of date 4/11

For complete Installation Instructions visit **www.panasonic.com/building**

Model	Quantity	Comments	Project:
			Location:
			Architect:
			Engineer:
			Contractor:
			Submitted by:
			Date:

Panasonic Home and Environment Company
Division of Panasonic Corporation of North America
One Panasonic Way
Secaucus, NJ 07094

www.panasonic.com/building

Panasonic ideas for life