breez GreenBuilder

MODEL GBR80LED

(**Fan/LED Light** - 80 CFM)

4" Duct (Standard):
80 CFM/0.8 Sones @ 0.1 SP, 11 Watts
63 CFM/1.5 Sones @ 0.25 SP, 13 Watts

Description

Low noise ceiling mount ventilating Fan/LED Light rated for continuous running. Fan has been awarded ENERGY STAR® qualified. It is HVI, UL, and cUL certified, and can be used to comply with ASHRAE 62.2 (local and whole building continuous and intermittent operation), CA Title 24 requirements.

DC Motor/Blower

- Power rating of 120 volts/60Hz
- DC Brushless motor engineered to run continuously
- Motor equipped with thermal cutoff fuse
- Removable with permanently lubricated plug-in motor
- Built-in soft start function to increase bearings' life
- Automatically powers OFF when impeller is locked abnormally
- Self-compensating motor speed for intended airflow when static pressure is encountered

Housing

- Galvanized steel body
- Detachable 4" diameter duct adapter
- Built-in back-draft damper
- Easy installation

Grille

- Attractive design using ABS material
- Attaches directly to housing with torsion springs

Light

- (1)11-Watt LED lamp included
- Main light output 850 Lumens, 3000K, and 90CRI

LED Indicator

- Turn the power switch on/off to operate on/off. LED indicator will be green when power is on

Warranty

- 3-year limited warranty

TYPICAL SPECIFICATION

Ventilation fan shall be Delta Breez model GBR80LED; ENERGY STAR qualified with DC brushless motor engineered to run continuously for a minimum 70,000 hours; airflow rating of 80 CFM and loudness rating of 0.8 Sones at 0.1 static pressure as certified by the Home Ventilating Institute (HVI); power consumption of 11 Watts with efficiency rating of 7.2 CFM/Watt at 0.1" static pressure; fan will feature LED indicator running light, motor lock protection and self-compensating motor speed for intended airflow when static pressure is encountered. UL and cUL listed for tub/shower enclosure when used with GFCI-protected branch circuit wiring.

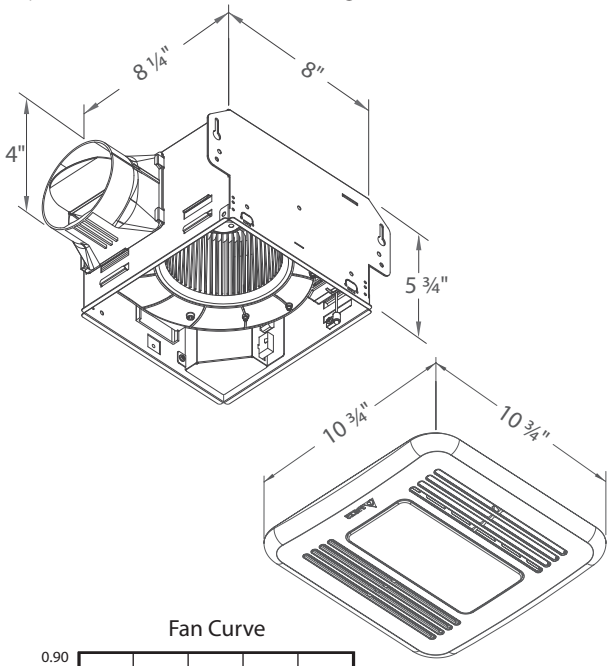

Fan Curve

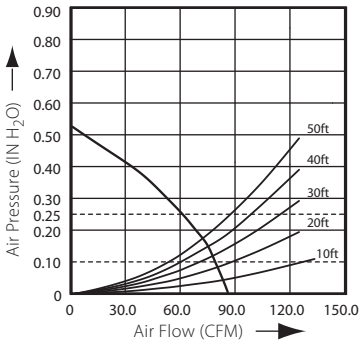

BreezGreenBuilder GBR80LED	4" Duct (Standard)	
Static Pressure (inches w.g.)	0.1	0.25
Air Flow (CFM)	80	63
Sones	0.8	1.5
Power Consumption (Watts)	11	13
Energy Efficiency (CFM/Watt)	7.2	5.6
Current (Amps)	0.33 Max	
Power Rating (V/Hz)	120 / 60	
LED Main Light (Watt)	13	

Model	Quantity	Comments	Project:
			Location:
			Architect:
			Engineer:
			Contractor:
			Submitted by:
			Date:

46101 Fremont Blvd., Fremont, CA 94538 | tel 1.888.979.9889 | www.deltabreez.com