Air King Ventilation Products®

SPECIFICATIONS

BFQ75

EXHAUST FANS

HVI® 2100 CERTIFIED

70 CFM/2.0 Sones @ 0.10" SP.
55 CFM @ 0.25" SP.

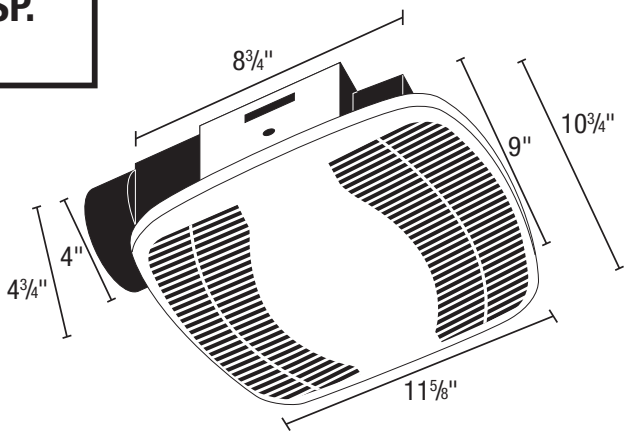

- **Grill**
  White, polymeric grill secured in place with torsion springs; easily removed if necessary, dimensions - 10¾" x 11⅝".

- **Blower Wheel**
  One piece polymeric wheel 5⅛" diameter, 2⅜" wide, with 48 fins.

- **Motor**
  Heavy duty, permanently split capacitor, plug-in, 4 pole motor, life time lubrication, thermally protected, suitable for continuous operation. Rated 120 volts, 60 hz.

- **Fan Housing**
  PC/ABS polymeric, dimensions 8¾" x 9" x 4¾".

- **Duct Collar**
  Plastic collar for 4" duct connection, comes complete with built in non-metallic back draft damper for quiet operation.

- **Ventilating Area**
  For bathrooms up to 70 sq. ft. For other rooms up to 85 sq. ft.

- **Single Pack Shipping Info**
  Box Dim: 11⅛" x 12" x 6⅜"
  UPC: 0-8316290306-8
  Shipping Weight: 5¼ lbs.

Acceptable for use over tub or shower when installed in a GFCI protected branch circuit.

COMPLIES WITH ASHRAE 62.2 VENTILATION STANDARDS

CAN BE USED TO COMPLY WITH TITLE 24 VENTILATION REQUIREMENTS

- **Unit Mounting**
  Designed to mount in ceilings with at least 6" of clearance. The unit is mounted directly to the joist using a separate lock-in bracket (included with unit). The housing will mount through drywall thickness up to ¾", with a rough-in opening of 8⅞" x 9⅛".

  Suitable for wall insert mounting when discharged vertically and mounted outside of shower enclosure

EXPANDED PERFORMANCE

	Static Pressure (inches of w.g.)							*Sones @ .1 SP*	*Fan Speed RPM*	*Maximum Fan Watts*	*Amps*
	0	0.05	0.1	0.125	0.15	0.2	0.25				
Air Flow - CFM	79	74	70	68	66	62	55	2.0	1300	23.5	0.3

PROJECT		**ARCHITECT**	
LOCATION		**ENGINEER**	
CONTRACTOR		**SUBMITTED BY**	**DATE**

FAN NUMBER	MODEL NUMBER	CFM	IN W.C.	RPM	WATTS	AMPS	SONES	QTY	OPTIONAL EQUIPMENT & REMARKS

c UL us

ENERGY STAR

U.S.: 820 Lincoln Avenue
West Chester, Pennsylvania 19380-4466
Tel: (610) 692-7400 • 877-304-3785
Fax: (610) 696-8048

Canada:
Brampton, Ontario
Tel: 905-456-2033
Fax: (905) 456-1015

Specifications subject to change without notice.

Updated 5-22