SPECIFICATIONS

E130SH

EXHAUST FAN

130 CFM/<0.3 Sones @ 0.10" SP.
150 CFM/0.7 Sones @ 0.10" SP. (Boost)
113 CFM @ 0.25 SP. (Boost)

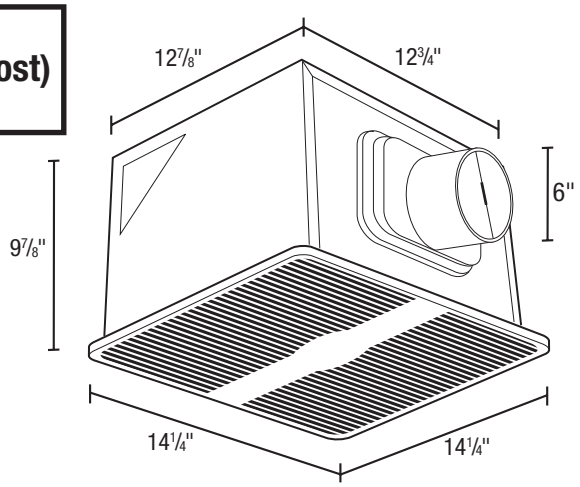

- **Grill**
  White, polymeric grill secured in place with torsion springs; easily removed if necessary, dimensions - 14 7/16" x 14 7/16".
- **Blower Wheel**
  Balanced polymeric dual inlet blower wheel secured in place using a hex nut.
- **Motor**
  Enclosed 4 pole high efficiency, permanently split capacitor motor (PSC); life time lubrication, suitable for continuous operation. Motor bearings - ball. Rated 115/120 volts, 60 Hz.
- **Fan Housing**
  23 gauge galvanized steel housing.
  Overall dimensions: 12 7/8"x 12 3/4"x 9 7/8".
- **Humidity Sensor**
  Integrated humidity sensor, adjustable up to 80% RH automatically turns fan on until the humidity drops to the desired set point.
- **Duct Collar**
  6" round, zinc plated metal collar adapter. Gasketed, spring loaded aluminum backdraft damper.
- **Electrical Connections**
  1/2" electrical knockouts provided. Easy wiring access via either internal or external wiring compartment cover.
- **Single Pack Shipping Info**
  Box Dim: 20" x 15 7/8" x 11 3/8"
  UPC: 0-8316294129-9
  Shipping Weight: 14.5 lbs.

Acceptable for use over tub or shower when installed in a GFCI protected branch circuit.

- **Unit Mounting**
  The housing will mount through drywall thickness up to 3/4", with a rough-in opening of 13" x 12 7/8". The housing will mount either between 16" or 24" on center joists, using the 2 supplied housing mounting brackets. The housing mounting brackets can be adapted for overhead mounting (hardware not provided). The unit is provided with an optionally installed ceiling flange to ensure proper building infiltration rates are maintained and that no air leaks occur between the fan housing and ceiling cutout.

EXPANDED PERFORMANCE

	Static Pressure (inches of w.g.)							Sones @ .1 SP	Fan Speed RPM	Maximum Power Watts	Amps
	0	0.1	0.15	0.2	0.25*	0.3	0.35				
Air Flow - CFM	153	130	117	104	89/113	71	51	<0.3	812	37.0	0.3

* Boost speed provides 113 CFM @ .25 Static Pressure, 0.7 sones

PROJECT		ARCHITECT	
LOCATION		ENGINEER	
CONTRACTOR		SUBMITTED BY	DATE

FAN NUMBER	MODEL NUMBER	CFM	IN W.G.	RPM	WATTS	AMPS	SONES	QTY	OPTIONAL EQUIPMENT & REMARKS

U.S.: 820 Lincoln Avenue
West Chester, Pennsylvania 19380-4466
Tel: (610) 692-7400 • 877-304-3785
Fax: (610) 696-8048

Canada:
Brampton, Ontario
Tel: 905-456-2033
Fax: (905) 456-1015