breez Signature

MODEL SIG80D

(**Fan with Dual Speed** - 80 CFM)

Full Speed:
80 CFM/<0.3 Sones @ 0.1 SP, 8.7 Watts
79 CFM/0.5 Sones @ 0.25 SP, 14.0 Watts

Low Speed:
30 CFM/<0.3 Sones @ 0.1 SP, 4.8 Watts
31 CFM/<0.3 Sones @ 0.25 SP, 8.9 Watts

Description

Low noise ceiling mount ventilating fan with dual speed rated for continuous running. Fan has been awarded ENERGY STAR® . It is HVI, UL, and cUL certified, and can be used to comply with ASHRAE 62.2 (local and whole building continuous and intermittent operation). Meets CA Title 24 requirements.

DC Motor/Blower

- Power rating of 120 volts/60Hz
- DC brushless motor engineered to run continuously
- Motor equipped with thermal cutoff fuse
- Removable with permanently lubricated plug-in motor
- Allows fan to operate in full speed mode or continuous low speed mode by manual switch
- Duct diameter no less than 4"
- For continuous low speed mode, the fan runs continuously at a user-preset lower level (0, 30, 50, or 60 CFM)
- User-preset delay time positions (0.5, 5, 15, 30, 45, or 60 min)
- Built-in soft start function to increase bearings' life
- Automatically powers off when impeller is locked abnormally
- Self-compensating motor speed for intended airflow when static pressure is encountered

Housing

- Galvanized steel body
- Detachable 4" diameter metal duct adapter
- Built-in backdraft damper
- Easy installation with expandable extension bracket

Grille

- Attractive design using ABS material
- Attaches directly to housing with torsion springs

LED Indicator

- Green and amber LED indicator lights show continuous low speed and full speed modes

Warranty

- 3-Year limited warranty

TYPICAL SPECIFICATION

Ventilation fan shall be Delta Breez model SIG80D; ENERGY STAR qualified with Brushless DC Motor engineered to run continuously for a minimum 70,000 hours; airflow rating of 80 CFM and loudness rating of <0.3 Sones at 0.1 static pressure as certified by the Home Ventilating Institute (HVI); power consumption of 8.7 Watts with efficiency rating of 9.7 CFM/Watt; fan will feature LED indicator running light, motor lock protection and self-compensating motor speed for intended airflow when static pressure is encountered. UL and cUL listed for tub/shower enclosure when used with GFCI-protected branch circuit wiring.

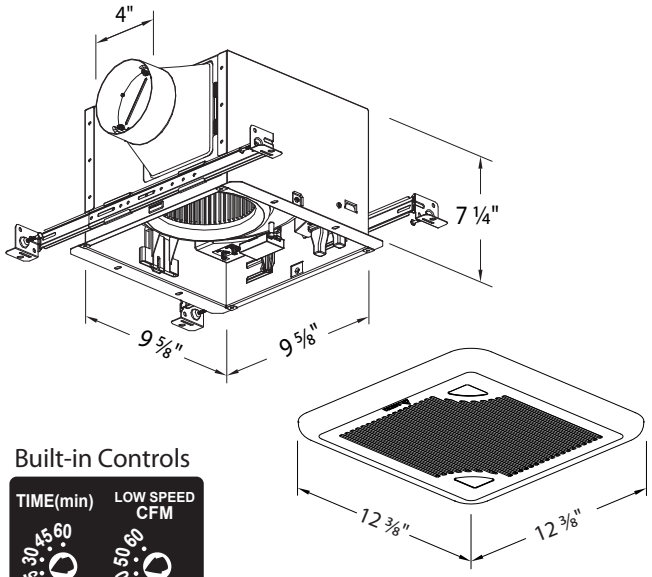

Built-in Controls

Fan Curve

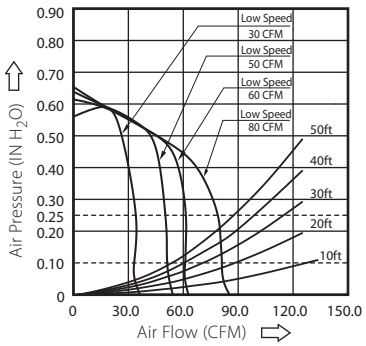

BreezSignature SIG80D	4" Duct (Standard)							
Static Pressure (inches w.g.)	0.1	0.25	0.1	0.25	0.1	0.25	0.1	0.25
Air Flow (CFM)	30	31	50	50	60	61	80	79
Sones	<0.3	<0.3	<0.3	<0.3	<0.3	0.3	<0.3	0.5
Power Consumption (Watts)	4.8	8.9	6.6	9.8	6.7	11.8	8.7	14.0
Energy Efficiency (CFM/Watt)	7.7	4.1	8.4	5.2	9.9	5.6	9.7	6.3
Current (Amps)	0.30 Max							
Power Rating (V/Hz)	120 / 60							

Model	Quantity	Comments	Project:
			Location:
			Architect:
			Engineer:
			Contractor:
			Submittedby:
			Date:

46101 Fremont Blvd., Fremont, CA 94538 | tel 1.888.979.9889 | www.deltabreez.com